COUNTY PURCHASING AGENT

Fort Bend County, Texas

Jaime Kovar
County Purchasing Agent

(281) 341-8640
Fax (281) 341-8645

November 25, 2024

TO: All Prospective Bidders

RE: Addendum No. 2 – Fort Bend County RFP 25-023 – Construction of the Black Cowboy Museum for Fort Bend County

Addendum 2:

Attached is Addendum 2. Vendors are to utilize Addendum 2 document while preparing their solicitation response. Changes include Q&A #2, Revised Exhibit II, Fireplace Cut Sheet, Metal Wall Panel and Metal Roofing Spec Cut Sheet, and Drawing Sheet SG-203. Provided by Architect.

****

Immediately upon your receipt of this addendum, please fill out the following information and email this page to Tyler Kendziora at tyler.kendziora@fortbendcountytx.gov

_____

Company Name

_____

Signature of person receiving addendum Date

If you have any questions, please contact this office.

Sincerely,

Tyler Kendziora

Tyler Kendziora
Senior Buyer

RFP 25-023 – Construction of the Black Cowboy Museum for Fort Bend County

Q&A #2

Question 1: The signage is on drawing pages SG-001, 101, SG-201-SG-205. Please provide Missing page SG-203.

Answer: SG 203 has been added to this addendum on page 641.

Question 2: General note 3/A-201 calls out phenolic wall panels. Please provide a location for these panels.

Answer: There are no phenolic wall panels on this project. Disregard General note 3.

Question 3: Reference C4.4 and C4.5, the slopes around the pond is noted as 4:1, however this does not match with the spot elevations. Please clarify.

Answer: Please disregard the 4:1 slope and proceed with the proposed elevations.

Question 4: Reference C6.0, please confirm when the proposed waterline and proposed sanitary line and manhole will be installed.

Answer: Proposed water and sanitary sewer along the roadway for the proposed building connection will be available by others in the last quarter of 2025.

Question 5: Reference C3.1, it is indicated that the proposed building will be Pre-Engineered Metal Building, also there are no specifications provided for Metal Wall Panel and Metal Roofing, however, the architectural and structural drawings indicated this is not a Pre-Engineered Metal Building. Please clarify whether is this a Pre-Engineered Metal Building? If so, please issue specifications for Pre-Engineered Metal Building. If not please issue specifications for Metal Wall Panel and Metal Roofing.

Answer: This is not a pre-engineered building. See attached spec cut sheet in this addendum starting on page 620.

Question 6: Please provide revision to the bid form breakdown - Page 93 of 542 (Adden 1 pdf – see below). Some items such as, landscaping, SWPPP, Concrete, Asphalt, Earthwork, Site Utilities, Striping are missing, while the form also have items not applicable to this project (currently not specified), such as Wood Flooring, Window Treatments, Fabric Wrapped Panels, Demountable Partitions, etc.

Answer: Bid form has been removed and please see revised Exhibit II Project Manual.

Question 7: Will there be a bid form for this project? I see that exhibit 1 is the pricing form but there is only a total bid line item on the addendum 1 documents.

Answer: Bid form has been removed. Please see revised Exhibit II Project Manual. Please use Exhibit 1: Pricing form as stated in section 28.4 of the solicitation.

Question 8: The bid form does not have a section for concrete foundations, can this be added.

Answer: Bid form has been removed. Please see revised Exhibit II Project Manual.

Question 9: Is this bid just for the building or is there a site package as well? I say that because there are no items on the bid form for grading, landscape, irrigation, paving, or utilities

Answer: This bid includes the building and site work package work which includes grading, landscape, irrigation, paving and utilities. Bid form has been removed. Please see revised Exhibit II Project Manual.

Question 10: Section 1.8 of the General Requirements states that a 5% Bid Bond is required, however these General Requirements also reference another project (Widening and Reconstruction of Beechnut) in section 2.0.

Please confirm if a 5% bid bond is required for this project

Answer: 5% Bid Bond is not required for this project. General Requirement has been removed for Widening and Reconstruction.

Question 11: Section 28 Evaluation Criteria, Item 28.4 lists TAB 1 Cost – Complete Exhibit I. Exhibit I is included, but there is also a document entitled Document 004100 - Bid Form and a sheet with a table behind it (no page number).

Please confirm the correct bid form to include in TAB 1 of the RFP response.

Answer: Bid form has been removed. Please see revised Exhibit II Project Manual. Please use Exhibit 1: Pricing form as stated in section 28.4 of the solicitation.

Question 12: Reference 124000 WOOD BURNING FIREPLACE, Item 2.1A indicated Acucraft as a manufacturer. Please provide cut sheet referenced including drawings and pertinent model number, etc.

Answer: See fireplace cut sheet attached with this addendum starting on Page. 519.

Question 13: Please clarify if the bid is to include providing the appliances noted on the elevation sheets. If so, please provide specifications including model number and trim finishes, etc.

Answer: Appliances are not included in this scope of work.

Question 14: Please clarify if the bid is to include providing any window covering? If so, please issue specifications and indicate desired locations.

Answer: No Window Covering Required

Question 15: We have been reviewing the updated plans included with Addendum No 01, we have found page SG-203 is missing. It is listed on the TOC. Please advise if this drawing was to be included or if it has been removed.

Answer: See SG-203 in the attached addendum.

Question 16: Please confirm that we are not using a detailed bid form with line items, only Exhibit I: Pricing Form?

Answer: Bid form has been removed. Please see revised Exhibit II Project Manual. Please use Exhibit 1: Pricing form as stated in section 28.4 of the solicitation.

Question 17: Is this a Pre-Engineered Metal Building per notes on Civil Drawing C7.0?

Answer: No the building is not a Pre- Engineered.

Question 18: Is the Client or General Contractor responsible for material testing?

Answer: Fort Bend County will be responsible for construction material testing.

COUNTY PURCHASING AGENT

Fort Bend County, Texas

Jaime Kovar
County Purchasing Agent

(281) 341-8640
Fax (281) 341-8645

November 14, 2024

TO: All Prospective Bidders

RE: Addendum No. 1 – Fort Bend County RFP 25-023 – Construction of the Black Cowboy Museum for Fort Bend County

Addendum 1:

Attached is Addendum 1. Vendors are to utilize Addendum 1 document while preparing their solicitation response. Changes include Q&A #1, and Exhibit III Scaled. Provided by Architect.

****

Immediately upon your receipt of this addendum, please fill out the following information and email this page to Tyler Kendziora at tyler.kendziora@fortbendcountytx.gov

_____

Company Name

_____

Signature of person receiving addendum Date

If you have any questions, please contact this office.

Sincerely,

Tyler Kendziora

Tyler Kendziora
Senior Buyer

RFP 25-023 – Construction of the Black Cowboy Museum for Fort Bend County

Q&A #1

Question 1: I have downloaded the proposal documents for the Construction of the Black Cowboy Museum for Fort Bend County and noticed the drawings are in 8 ½ X 11. Do you have a set of scaled drawings that we can download? Thanks!

Answer: See Attached in Addendum 1.

Fort Bend County, Texas
Request for Proposals

Construction of the Black Cowboy Museum
for Fort Bend County
RFP 25-023

SUBMIT PROPOSALS TO:

Fort Bend County
Purchasing Department
Travis Annex
301 Jackson, Suite 201
Richmond, TX 77469

****NOTE:**
All correspondence must include the term "Purchasing Department" in address to assist in proper delivery

SUBMIT NO LATER THAN:

Tuesday, December 10, 2024
2:00 PM (Central)

MARK ENVELOPE:

RFP 25-023
Black Cowboy Museum

ALL SUBMITTALS MUST BE RECEIVED AND TIME/DATE STAMPED BY THE PURCHASING OFFICE OF FORT BEND COUNTY ON OR BEFORE THE SPECIFIED TIME/DATE STATED ABOVE.

SUBMITTALS RECEIVED AS REQUIRED WILL THEN BE OPENED AND THE NAMES PUBLICLY READ.

SUBMITTALS RECEIVED AFTER THE SPECIFIED TIME WILL BE RETURNED UNOPENED.

Results will not be given by phone.
Results will be provided to bidder in writing after Commissioners Court award.

Requests for information must be in writing and directed to:
Tyler Kendziora
Senior Buyer
Tyler.Kendziora@fortbendcountytx.gov

Vendor Responsibilities:

- Download and complete any addendums. (Addendums will be posted on the Fort Bend County website no Later than 48 hours prior to bid opening)
- Submit response in accordance with requirements stated on the cover of this document.
- DO NOT submit responses via email or fax.

Prepared: 10/31/2024
Issued: 11/10/2024

COUNTY PURCHASING AGENT
Fort Bend County, Texas

Vendor Information

Jaime Kovar
Purchasing Agent
Office (281) 341-8640

Legal Company Name (top line of W9)			
Business Name (if different from legal name)			
Type of Business	☐ Corporation/LLC ☐ Partnership ☐ Sole Proprietor/Individual ☐ Tax Exempt		Age in Business?
Federal ID # or S.S. #		SAM.gov Unique Entity ID #	
SAM.gov CAGE / NCAGE			
Publicly Traded Business	___ No ___ Yes Ticker Symbol _____		
Remittance Address			
City/State/Zip			
Physical Address			
City/State/Zip			
Phone Number			
E-mail			
Contact Person			
Check all that apply to the company listed above and provide certification number.	DBE-Disadvantaged Business Enterprise ☐ SBE-Small Business Enterprise ☐ HUB-Texas Historically Underutilized Business ☐ WBE-Women's Business Enterprise ☐	**Certification #** _____ **Certification #** _____ **Certification #** _____ **Certification #** _____	Cert Date / Exp Date _____ _____ _____ _____ _____ _____ _____ _____
Company's gross annual receipts	<$500,000 _____	$500,000-$4,999,999 _____	
	$5,000,000-$16,999,999 ___	$17,000,000-$22,399,999 _____	>$22,400,000 _____
NAICs codes (Please enter all that apply)			
Signature of Authorized Representative			
Printed Name			
Title			
Date			

THIS FORM MUST BE SUBMITTED WITH THE SOLICITATION RESPONSE

1.0 SCOPE OF WORK:

Fort Bend County, Texas (hereafter referred to as the "County") seeks Proposals ("Proposals or RFP") for selection of a Contractor ("Respondent") to complete the construction of a new Black Cowboy Museum ("Project"), located in Kendleton, Texas.

Vendor is to construct a new two-story structure building totaling approximately 9,780 square feet with a building height of approximately forty (40) feet designed. The facility shall include, but not limited to a large showroom gallery for artwork and historical artifacts, meeting space, conference rooms, staff offices, sleeping area for grounds keeper, outdoor dining and kitchen area. The site area is 1.5 acres and shall include concrete paving for fifty (50) vehicle spaces and a loop around for the front entry.

2.0 GUIDELINES:

By virtue of submitting a proposal, interested parties are acknowledging:

2.1 The County reserves the right to reject any or all proposals if it determines that select proposals are not responsive to the RFP. The County reserves the right to reconsider any proposal submitted at any phase of the procurement. It also reserves the right to meet with select Respondents at any time to gather additional information. Furthermore, the County reserves the right to delete or add scope up until the final contract signing.

2.2 All Respondents submitting proposals agree that their pricing is valid for a minimum of ninety (90) days after proposal submission to the County. Furthermore, the County is by statute exempt from the State Sales Tax and Federal Excise Tax; therefore, proposal prices shall not include taxes.

2.3 This Proposal does not commit the County to award nor does it constitute an offer of employment or a contract for services. Costs incurred in the submission of this proposal, or in making necessary studies or designs for the preparation thereof, are the sole responsibility of the Respondents. Further, no reimbursable cost may be incurred in the anticipation of award. Proposals containing elaborate artwork, expensive paper and binding and expensive visual or other presentations are neither necessary nor desired.

2.4 In an effort to maintain fairness in the process, all inquiries concerning this procurement are to be directed only to the County's Purchasing Agent in writing. Attempts to contact any members of the County's Commissioners' Court or any other County employee to influence the procurement decision may lead to immediate elimination from further consideration.

2.5 When responding to this Proposal, follow all instructions carefully. Submit proposal contents according to the outline specified and submit all hard copy and electronic documents according to the instructions. Failure to follow these

instructions may be considered a non-responsive proposal and may result in immediate elimination from further consideration.

3.0 PROPOSAL CONTACT:

This Proposal is being issued by the County Purchasing Agent on behalf of Fort Bend County, Texas. Thus, responses should be directed to the Purchasing Agent, as outlined below. **Respondents are specifically directed NOT to contact any County personnel for meetings, conferences or technical discussions that are related to this Proposal other than specified herein. Unauthorized contact of any County personnel will likely be cause for rejection of the Respondent's proposal. All communications regarding the Proposal shall be directed to the County's Proposal Contact.** Communication with the Proposal Contact is permitted via email, facsimile, or written correspondence.

PROPOSAL CONTACT:

Tyler Kendziora
Senior Buyer
Fort Bend County Travis Annex
301 Jackson, Suite 201
Richmond, Texas 77469
Tyler.Kendziora@fortbendcountytx.gov
Phone: 346.481.6938

4.0 SUBMISSION REQUIREMENTS:

4.1 Submission requirements: one (1) original proposal is required by RFP opening time of **2:00 PM on Tuesday, December 10, 2024**. Six (6) paper copies, and one (1) electronic response on flash drive are required to be submitted to Purchasing by 9:00 AM on Wednesday, December 11, 2024. Flash drive must contain only one (1) file in PDF format and must match written response identically. Failure to provide proper flash drive is cause for disqualification. Proposal shall be submitted to the address shown below. Proposal shall be signed, in ink, by a person having the authority to bind the firm in a contract.

Fort Bend County	Proposal Number: R25-023
Purchasing Department	Due Date: December 10, 2024
301 Jackson, Suite 201	Time: 2:00 PM (CST)
Richmond, Texas 77469	For: Black Cowboy Museum

4.2 Respondents may submit their proposal any time prior to the Opening Date and time. The Respondent's name and address as well as a distinct reference to the Proposal number above shall be marked clearly on the submission. All proposals are time-stamped upon receipt and are securely kept, unopened, until the Opening Date. No responsibility will attach to the County, or any official or employee thereof, for the pre-opening of, post-opening of, or the failure to open a proposal

not properly addressed and identified. No oral, telegraphic, telephonic, or facsimile proposals will be considered.

4.3 Proposals may be modified or withdrawn prior to the established opening date by delivering written notice to the proposal contact. Any alteration made prior to opening date and time shall be initialed by the signer of the proposal, guaranteeing authenticity.

4.4 Proposals time-stamped after the due date and time will not be considered and will be returned to the Respondent unopened. Regardless of the method used for delivery, respondents shall be wholly responsible for the timely delivery of submitted proposals.

4.5 The Respondent's name and address shall be clearly marked on all copies of the proposal.

5.0 INCURRED COSTS:

Those submitting proposals do so entirely at their expense. There is no expressed or implied obligation by the County to reimburse any individual or firm for any costs incurred in preparing or submitting proposals, for providing additional information when requested by the County or for participating in any selection interviews, including discovery (pre-contract negotiations) and contract negotiations.

6.0 ACCEPTANCE:

6.1 Submission of any proposal indicates a Respondent's acceptance of the conditions contained in this Proposal unless clearly and specifically noted otherwise in their proposal.

6.2 Furthermore, the County is not bound to accept a proposal on the basis of lowest price, and further, the County has the sole discretion and reserves the right to cancel this Proposal, to reject any and all proposals, to waive any and all informalities and or irregularities, or to re-advertise with either the identical or revised specifications, if it is deemed to be in the County's best interests. The County reserves the right to accept or reject any or all of the items in the proposal, and to award the contract in whole or in part and/or negotiate any or all items with individual Respondents if it is deemed in the County's best interest.

6.3 Although Fort Bend County desires to negotiate toward a contract with a selected Respondent, the Commissioners' Court may award the contract on the basis of the initial proposals received, without discussions. Therefore, each initial proposal should contain the Respondent's best terms.

7.0 INTERPRETATIONS, DISCREPANCIES, AND OMISSIONS:

7.1 It is incumbent upon each potential Respondent to carefully examine these specifications, terms, and conditions. Should any potential Respondent find discrepancies, omissions or ambiguities in this Proposal, the Respondent shall at once request in writing an interpretation from the County's Proposal Contact. Any inquiries, suggestions, or requests concerning interpretation, clarification or additional information shall be made in writing via e-mail only to the County's Proposal Contact, as specified in Section 3.0. Deadline for submission of questions and/or clarification is **Tuesday, November 26, 2024 at 9:00 AM. (CST).** Requests received after the deadline will not be responded to due to the time constraints of this Proposal process.

7.2 The issuance of a written addendum is the only official method by which interpretation, clarification or additional information will be given by the County. Only questions answered by formal written addenda will be binding. Oral and other interpretations or clarification will be without legal effect. If it becomes necessary to revise or amend any part of this Proposal, notice will be given by the County Purchasing Agent to all prospective Respondents who were sent a Proposal. The Respondent in their proposal shall acknowledge receipts of amendments. Each Respondent shall ensure that they have received all addenda and amendments to this Proposal before submitting their proposals.

8.0 TENTATIVE SCHEDULE:

Release of RFP:	November 10, 2024
Pre-RFP conference:	November 19, 2024
Deadline for Questions:	November 26, 2024
Submission Due Date:	December 10, 2024
Evaluation of Submissions:	Week of December 15th
Commissioners Court Permission to Negotiate:	January 14, 2025
Negotiations:	Beginning January 15, 2025
Final Contract Approval Commissioners Court:	February 25, 2025

9.0 PRE-RFP CONFERENCE:

A Pre-RFP conference will be conducted on **Tuesday, November 19, 2024 at 9:00 AM** (central). The pre-RFP conference will be held at the Fort Bend County Purchasing Department located in the Travis Annex at 301 Jackson, Suite 201, Richmond, Texas 77469. All vendors are encouraged to attend. A site visit will be conducted after the conference, if necessary.

10.0 RETENTION OF RESPONDENT'S MATERIAL:

The County reserves the right to retain all proposals regardless of which response is selected. All proposals and accompanying documents become the property of the County.

11.0 CERTIFICATE OF INDEPENDENT PRICE DETERMINATION:

By submission of a proposal, each Respondent certifies, that in connection with this procurement:

11.1 The prices in this proposal have been arrived at independently, without consultation, communication, or agreement with any other Respondent; with any competitor; or with any County employee(s) or consultant(s) for the purpose of restricting competition on any matter relating to this Proposal.

11.2 Unless otherwise required by law, the prices which have been quoted in this proposal have not been knowingly disclosed by the Respondent and will not knowingly be disclosed by the Respondent prior to award directly or indirectly to any other Respondent or to any competitor; and;

11.3 No attempt has been made or will be made by the Respondent to induce any other person or firm to submit or not to submit a proposal for the purpose of restricting competition.

12.0 ASSIGNMENT:

The Respondent may not sell, assign, transfer or convey the contract resulting from this Proposal, in whole or in part, without the prior written approval from Fort Bend County Commissioners' Court.

13.0 CONFIDENTIAL MATTERS:

13.1 All data and information gathered by the Respondent and its agents, including this Proposal and all reports, recommendations, specifications, and data shall be treated by the Respondent and it's agents as confidential. The Respondent and it's agents shall not disclose or communicate the aforesaid matters to a third party or use them in advertising, publicity, propaganda, and/or in another job or jobs, unless written consent is obtained from the County.

13.2 Proposals will only be publicly received and acknowledged only so as to avoid disclosure of the contents to competing Respondents and kept secret during negotiation. However, all proposals shall be open for public inspection after the contract is awarded. Trade secrets and any material that is considered to be confidential information contained in the proposal and identified by Respondent as such will be treated as confidential to the extent allowable in the Open Records Act.

14.0 LIMITS OF SUBCONTRACTORS:

14.1 The County has approval rights over the use and/or removal of all subcontractors and/or vendor(s). Subcontractors shall conform to all County policies.

14.2 Any dispute between the Respondent and subcontractors, including any payment dispute, will be promptly remedied by the Respondent. Failure to promptly remedy or to make prompt payment to subcontractor may result in the withholding of funds from the Respondent by the County for any payments owed to the subcontractor.

15.0 JURISDICTION, VENUE, CHOICE OF LAW:

This Proposal and any contract resulting there from shall be governed by and construed according to the laws of the State of Texas. Should any portion of any contract be in conflict with the laws of the State of Texas, the State laws shall invalidate only that portion. The remaining portion of the contract(s) shall remain in effect. Any lawsuit shall be governed by Texas law and Fort Bend County, Texas shall be the venue for any action or proceeding that may be brought or arise out of, in connection with or by reason of this Proposal process and resulting Agreements.

16.0 INDEPENDENT CONTRACTOR:

The Respondent is an independent contractor and no employee or agent of the Respondent shall be deemed for any reason to be an employee or agent of the County.

17.0 AMERICANS WITH DISABILITIES ACT (ADA)

Proposals shall comply with all federal, state, county, and local laws concerning this type of products/service/equipment/project and the fulfillment of all ADA requirements.

18.0 DRUG-FREE WORKPLACE:

All Respondents shall provide any and all notices as may be required under the Drug-Free Workplace Act of 1988, 28 CFR Part 67, Subpart F, to their employees and all sub-contractors to insure that the County maintains a drug-free workplace.

19.0 PERFORMANCE AND PAYMENT BOND:

Performance and Payment Bonds: In the event the total accepted bid price exceeds $25,000 the Contractor must provide a payment bond in the amount of 100% of the total contract sum, and in the event the total accepted bid price exceeds $100,000 the contractor must also provide a performance bond in the amount of 100% of the total contract sum. Bonds must be submitted to the Office of the County Purchasing Agent within ten (10) calendar days after receipt of notification of bid award. Such bonds shall be executed by a corporate surety duly authorized and admitted to do business in the State of Texas and licensed in the State of Texas to issue surety bonds with a Best Rating of "A" or better. Fort Bend County reserves the right to accept or reject any surety company proposed by the Contractor. In the event Fort Bend County rejects, the proposed surety company, the Contractor will be afforded five (5) additional days to submit the required bonds issued by a surety company acceptable to Fort Bend County.

20.0 POWER OF ATTORNEY:

An attorney-in-fact who signs a bid bond, performance bond or payment bond must file with each bond a certified and effectively dated copy of his or her power of attorney.

21.0 TEXAS ETHICS COMMISSION FORM 1295:

21.1 Effective January 1, 2016 all contracts executed by Commissioners Court, regardless of the dollar amount, will require completion of Form 1295 "Certificate of Interested Parties", per the new Government Code Statute §2252.908. All firms submitting a response to a formal Bid, RFP, SOQ or any contracts, contract amendments, renewals or change orders are required to complete the Form 1295 online through the State of Texas Ethics Commission website. Please visit:
https://www.ethics.state.tx.us/filinginfo/1295/

21.2 On-line instructions:

21.2.1 Name of governmental entity is to read: Fort Bend County

21.2.2 Identification number use: RFP 25-023

21.2.3 Description is: Construction of the Black Cowboy Museum

21.3 Apparent low bidder(s) will be required to provide the Form 1295 within three (3) calendar days from notification; however, if your company is publicly traded you are not required to complete this form.

22.0 INSURANCE:

22.1 All respondents shall submit, with RFP, a current certificate of insurance indicating coverage in the amounts stated below. In lieu of submitting a certificate of insurance, respondents may submit, with RFP, a notarized statement from an Insurance company, authorized to conduct business in the State of Texas, and acceptable to Fort Bend County, guaranteeing the issuance of an insurance policy, with the coverage stated below, to the firm named therein, if successful, upon award of this Contract.

22.2 At contract execution, contractor shall furnish County with properly executed certificates of insurance, which shall evidence all insurance required and provide that such insurance shall not be canceled, except on 30 days prior written notice to County. Contractor shall provide certified copies of insurance endorsements and/or policies if requested by County. Contractor shall maintain such insurance coverage from the time Services commence until Services are completed and provide replacement certificates, policies and/or endorsements for any such insurance expiring prior to completion of Services. Contractor shall obtain such

insurance written on an Occurrence form (or a Claims Made form for Professional Liability insurance) from such companies having Best's rating of A/VII or better, licensed or approved to transact business in the State of Texas, and shall obtain such insurance of the following types and minimum limits:

22.2.1 Workers' Compensation insurance. Substitutes to genuine Workers' Compensation Insurance will not be allowed.

22.2.2 Employers' Liability insurance with limits of not less than $1,000,000 per injury by accident, $1,000,000 per injury by disease, and $1,000,000 per bodily injury by disease.

22.2.3 Commercial general liability insurance with a limit of not less than $1,000,000 each occurrence and $2,000,000 in the annual aggregate. Policy shall cover liability for bodily injury, personal injury, and property damage and products/completed operations arising out of the business operations of the policyholder.

22.2.4 Business Automobile Liability coverage with a combined Bodily Injury/Property Damage limit of not less than $1,000,000 each accident. The policy shall cover liability arising from the operation of licensed vehicles by policyholder.

22.3 County and the members of Commissioners Court shall be named as additional insured to all required coverage except for Workers' Compensation and Professional Liability (if required). All Liability policies including Workers' Compensation written on behalf of contractor, excluding Professional Liability, shall contain a waiver of subrogation in favor of County and members of Commissioners Court.

22.4 If required coverage is written on a claims-made basis, contractor warrants that any retroactive date applicable to coverage under the policy precedes the effective date of the contract; and that continuous coverage will be maintained or an extended discovery period will be exercised for a period of two (2) years beginning from the time that work under the agreement is completed.

22.5 Builder's Risk Insurance: Contractor is required to provide proof before a Purchase Order is issued for this project and keep in full force and effect until the Transfer Date, Builders Risk Insurance, subject to policy terms and conditions, of direct physical loss or damage to property, materials, equipment and supplies which are to become an integral part of the Project, whether owned by Contractor, or subcontractors of every tier, and in which one or more of same has an insurable interest, while in transit, while at the Construction Site awaiting construction, during construction, and until the Transfer Date. Such insurance shall be maintained to cover, as nearly as practicable, the insurable value of such property, materials, equipment and supplies at risk, and shall contain a waiver of

subrogation in favor of Contractor, Architect, subcontractors of any tier and Owner for loss or damage occurring during the Work and shall name Contractor as the named insured and Owner as additional insureds. All Builder's Risk Insurance proceeds shall be paid directly to the Contractor.

23.0 INDEMNIFICATION:

Respondent shall save harmless County from and against all claims, liability, and expenses, including reasonable attorney's fees, arising from activities of Respondent, its agents, servants or employees, performed under this agreement that result from the negligent act, error, or omission of Respondent or any of Respondent's agents, servants or employees.

23.1 Respondent shall timely report all such matters to Fort Bend County and shall, upon the receipt of any such claim, demand, suit, action, proceeding, lien or judgment, not later than the fifteenth day of each month; provide Fort Bend County with a written report on each such matter, setting forth the status of each matter, the schedule or planned proceedings with respect to each matter and the cooperation or assistance, if any, of Fort Bend County required by Respondent in the defense of each matter.

23.2 Respondent's duty to defend, indemnify and hold Fort Bend County harmless shall be absolute. It shall not abate or end by reason of the expiration or termination of any contract unless otherwise agreed by Fort Bend County in writing. The provisions of this section shall survive the termination of the contract and shall remain in full force and effect with respect to all such matters no matter when they arise.

23.3 In the event of any dispute between the parties as to whether a claim, demand, suit, action, proceeding, lien or judgment appears to have been caused by or appears to have arisen out of or in connection with acts or omissions of Respondent, Respondent shall never-the-less fully defend such claim, demand, suit, action, proceeding, lien or judgment until and unless there is a determination by a court of competent jurisdiction that the acts and omissions of Respondent are not at issue in the matter.

23.4 Respondent's indemnification shall cover, and Respondent agrees to indemnify Fort Bend County, in the event Fort Bend County is found to have been negligent for having selected Respondent to perform the work described in this request.

23.5 The provision by Respondent of insurance shall not limit the liability of Respondent under an agreement.

23.6 Respondent shall cause all trade contractors and any other contractor who may have a contract to perform construction or installation work in the area where work will be performed under this request, to agree to indemnify Fort Bend County and to hold it harmless from all claims for bodily injury and property damage that arise may from said Respondent's operations. Such provisions shall

be in form satisfactory to Fort Bend County.

23.7 Loss Deduction Clause - Fort Bend County shall be exempt from, and in no way liable for, any sums of money which may represent a deductible in any insurance policy. The payment of deductibles shall be the sole responsibility of Respondent and/or trade contractor providing such insurance.

24.0 PREVAILING WAGES:

This project is subject to the prevailing wage rate requirements of Chapter 2258 of the Government Code. All persons employed by Contractor shall be compensated at not less than the rates shown below. Contractor shall keep detailed records of each of its workers and said records shall be made available to County for inspection at all reasonable times. The Contractor shall pay Fort Bend County sixty dollars ($60.00) for each worker employed by the Contractor for the provision of services described herein for each calendar day or part of the day that the worker is paid less than the below stated rates. Contractors may also visit www.wdol.gov/dba.aspx.

General Decision Number: TX20240247 10/18/2024
Superseded General Decision Number: TX20230247

State: Texas

Construction Type: Building

County: Fort Bend County in Texas.

BUILDING CONSTRUCTION PROJECTS (does not include single family homes or apartments up to and including 4 stories).

Note: Contracts subject to the Davis-Bacon Act are generally required to pay at least the applicable minimum wage rate required under Executive Order 14026 or Executive Order 13658. Please note that these Executive Orders apply to covered contracts entered into by the federal government that are subject to the Davis-Bacon Act itself, but do not apply to contracts subject only to the Davis-Bacon Related Acts, including those set forth at 29 CFR 5.1(a)(1).

If the contract is entered into on or after January 30, 2022, or the contract is renewed or extended (e.g., an option is exercised) on or after January 30, 2022: Executive Order 14026 generally applies to the contract. The contractor must pay all covered workers at least $17.20 per hour (or the applicable wage rate listed on this wage determination, if it is higher) for all hours spent performing on the contract in 2024.

If the contract was awarded on|or between January 1, 2015 and January 29, 2022, and the contract is not renewed or extended on or after January|30, 2022: Executive Order 13658 generally applies to the contract. The contractor must pay all covered workers at least $12.90 per

hour (or the applicable wage rate listed on this wage determination, if it is higher) for all hours spent performing on that contract in 2024.

The applicable Executive Order minimum wage rate will be adjusted annually. If this contract is covered by one of the Executive Orders and a classification considered necessary for performance of work on the contract does not appear on this wage determination, the contractor must still submit a
conformance request.

Additional information on contractor requirements and worker protections under the Executive Orders is available at http://www.dol.gov/whd/govcontracts.

Modification Number	Publication Date
0	01/05/2024
1	06/14/2024
2	10/18/2024

	Rates	Fringes
ASBE0022-009 07/03/2023		
ASBESTOS WORKER/HEAT & FROST INSULATOR (Duct, Pipe and Mechanical System Insulation)	$ 28.35	16.02
BOIL0074-003 07/01/2023		
BOILERMAKER	$ 37.00	24.64
CARP0551-008 04/01/2021		
CARPENTER (Excludes Acoustical Ceiling Installation, Drywall Hanging, Form Work and Metal Stud Installation)	$ 25.86	9.08
ELEC0716-005 08/29/2023		
ELECTRICIAN (Excludes Low Voltage Wiring and Installation of Alarms)	$ 34.50	10.41
ELEV0031-003 01/01/2024		
ELEVATOR MECHANIC	$ 51.32	37.885+a+b

FOOTNOTES:

A. 6% under 5 years based on regular hourly rate for all hours worked. 8% over 5 years based on regular hourly rate for all hours worked.

B. Holidays: New Year's Day; Memorial Day; Independence Day; Labor Day; Thanksgiving Day; Friday after Thanksgiving Day; Christmas Day; and Veterans Day.

ENGI0450-002 04/01/2014

POWER EQUIPMENT OPERATOR		
Cranes	$ 34.85	9.85
IRON0084-002 06/01/2023		
IRONWORKER (ORNAMENTAL AND STRUCTURAL)	$ 27.51	8.13
PLAS0783-001 04/01/2023		
PLASTERER	$ 31.34	10.30
PLUM0068-002 10/01/2023		
PLUMBER	$ 34.86	11.68
PLUM0211-010 10/01/2024		
PIPEFITTER (Including HVAC Pipe Installation)	$ 41.14	11.86
SHEE0054-003 04/01/2020		
SHEET METAL WORKER (Excludes HVAC Duct and Unit Installation)	$ 29.70	13.85
SUTX2014-023 07/21/2014		
ACOUSTICAL CEILING MECHANIC	$ 16.41 **	3.98
BRICKLAYER	$ 19.86	0.00
CAULKER	$ 15.36 **	0.00
CEMENT MASON/CONCRETE FINISHER	$ 13.82 **	0.00
DRYWALL FINISHER/TAPER	$ 16.30 **	3.71
DRYWALL HANGER AND METAL STUD INSTALLER	$ 17.45	3.96
ELECTRICIAN (Alarm Installation Only)	$ 17.97	3.37

ELECTRICIAN (Low Voltage Wiring Only)	$ 18.00	1.68
FLOOR LAYER: Carpet	$ 20.00	0.00
FORM WORKER	$ 11.87 **	0.00
GLAZIER	$ 19.12	4.41
INSULATOR – BATT	$ 14.87 **	0.73
IRONWORKER, REINFORCING	$ 12.10 **	0.00
LABORER: Common or General	$ 10.79 **	0.00
LABORER: Mason Tender – Brick	$ 13.37 **	0.00
LABORER: Mason Tender - Cement/Concrete	$ 10.50 **	0.00
LABORER: Pipelayer	$ 12.94 **	0.00
LABORER: Roof Tearoff	$ 11.28 **	0.00
LABORER: Landscape and Irrigation	$ 9.49 **	0.00
LATHER	$ 19.73	0.00
OPERATOR: Backhoe/Excavator/Trackhoe	$ 14.10 **	0.00
OPERATOR: Bobcat/Skid Steer/Skid Loader	$ 13.93 **	0.00
OPERATOR: Bulldozer	$ 20.77	0.00
OPERATOR: Drill	$ 16.22 **	0.34
OPERATOR: Forklift	$ 15.64 **	0.00
OPERATOR: Grader/Blade	$ 13.37 **	0.00
OPERATOR: Loader	$ 13.55 **	0.94
OPERATOR: Mechanic	$ 17.52	3.33
OPERATOR: Paver (Asphalt, Aggregate, and Concrete)	$ 16.03 **	0.00
OPERATOR: Roller	$ 16.00 **	0.00

PAINTER (Brush, Roller and Spray), Excludes Drywall Finishing/Taping	$ 16.77 **	4.51
ROOFER	$ 15.40 **	0.00
SHEET METAL WORKER (HVAC Duct Installation Only)	$ 17.81	2.64
SHEET METAL WORKER (HVAC Unit Installation Only)	$ 16.00 **	1.61
SPRINKLER FITTER (Fire Sprinklers)	$ 22.17	9.70
TILE FINISHER	$ 12.00 **	0.00
TILE SETTER	$ 16.17 **	0.00
TRUCK DRIVER: 1/Single Axle Truck	$ 14.95 **	5.23
TRUCK DRIVER: Dump Truck	$ 12.39 **	1.18
TRUCK DRIVER: Flatbed Truck	$ 19.65	8.57
TRUCK DRIVER: Semi-Trailer Truck	$ 12.50 **	0.00
TRUCK DRIVER: Water Truck	$ 12.00 **	4.11
WATERPROOFER	$ 14.39 **	0.00

WELDERS - Receive rate prescribed for craft performing operation to which welding is incidental.

** Workers in this classification may be entitled to a higher minimum wage under Executive Order 14026 ($17.20) or 13658 ($12.90). Please see the Note at the top of the wage determination for more information. Please also note that the minimum wage requirements of Executive Order 14026 are not currently being enforced as to any contract or subcontract to which the states of Texas, Louisiana, or Mississippi, including their agencies, are a party.

Note: Executive Order (EO) 13706, Establishing Paid Sick Leave for Federal Contractors applies to all contracts subject to the Davis-Bacon Act for which the contract is awarded (and any solicitation was issued) on or after January 1, 2017. If this contract is covered by the EO, the contractor must provide employees with 1 hour of paid sick leave for every 30 hours they work, up to 56 hours of paid sick leave each year. Employees must be permitted to use paid sick leave for their own illness, injury or other health-related needs, including preventive care; to assist a family member (or person who is like family to the employee) who is ill, injured, or has other health-related needs, including preventive care; or for reasons resulting from, or to assist a family member (or person who is like family to the employee) who is a victim of, domestic violence,

sexual assault, or stalking. Additional information on contractor requirements and worker protections under the EO is available at
https://www.dol.gov/agencies/whd/government-contracts.

Unlisted classifications needed for work not included within the scope of the classifications listed may be added after award only as provided in the labor standards contract clauses (29CFR 5.5 (a) (1) (iii)).

The body of each wage determination lists the classification and wage rates that have been found to be prevailing for the cited type(s) of construction in the area covered by the wage determination. The classifications are listed in alphabetical order of ""identifiers"" that indicate whether the particular rate is a union rate (current union negotiated rate for local), a survey rate (weighted average rate) or a union average rate (weighted union average rate).

Union Rate Identifiers
A four letter classification abbreviation identifier enclosed in dotted lines beginning with characters other than ""SU"" or ""UAVG"" denotes that the union classification and rate were prevailing for that classification in the survey. Example: PLUM0198-005 07/01/2014. PLUM is an abbreviation identifier of the union which prevailed in the survey for this classification, which in this example would be Plumbers. 0198 indicates the local union number or district council number where applicable, i.e., Plumbers Local 0198. The next number, 005 in the example, is an internal number used in processing the wage determination. 07/01/2014 is the effective date of the most current negotiated rate, which in this example is July 1, 2014.

Union prevailing wage rates are updated to reflect all rate changes in the collective bargaining agreement (CBA) governing this classification and rate.

Survey Rate Identifiers

Classifications listed under the ""SU"" identifier indicate that no one rate prevailed for this classification in the survey and the published rate is derived by computing a weighted average rate based on all the rates reported in the survey for that classification. As this weighted average rate includes all rates reported in the survey, it may include both union and non-union rates. Example: SULA2012-007 5/13/2014. SU indicates the rates are survey rates based on a weighted average calculation of rates and are not majority rates. LA indicates the State of Louisiana. 2012 is the year of survey on which these classifications and rates are based. The next number, 007 in the example, is an internal number used in producing the wage determination. 5/13/2014 indicates the survey completion date for the classifications and rates under that identifier.
Survey wage rates are not updated and remain in effect until a new survey is conducted.

Union Average Rate Identifiers

Classification(s) listed under the UAVG identifier indicate that no single majority rate prevailed for those classifications; however, 100% of the data reported for the classifications was union data. EXAMPLE: UAVG-OH-0010 08/29/2014. UAVG indicates that the rate is a weighted union average rate. OH indicates the state. The next number, 0010 in the example, is an internal

number used in producing the wage determination. 08/29/2014 indicates the survey completion date for the classifications and rates under that identifier.

A UAVG rate will be updated once a year, usually in January of each year, to reflect a weighted average of the current negotiated/CBA rate of the union locals from which the rate is based.

State Adopted Rate Identifiers

Classifications listed under the ""SA"" identifier indicate that the prevailing wage rate set by a state (or local) government was adopted under 29 C.F.R §1.3(g)-(h). Example: SAME2023-007 01/03/2024. SA reflects that the rates are state adopted. ME refers to the State of Maine. 2023 is the year during which the state completed the survey on which the listed classifications and rates are based. The next number, 007 in the example, is an internal number used in producing the wage determination. 01/03/2024 reflects the date on which the classifications and rates under the ?SA? identifier took effect under state law in the state from which the rates were adopted.

WAGE DETERMINATION APPEALS PROCESS

1.) Has there been an initial decision in the matter? This can be:
* an existing published wage determination
* a survey underlying a wage determination
* a Wage and Hour Division letter setting forth a position on a wage determination matter
* a conformance (additional classification and rate) ruling

On survey related matters, initial contact, including requests for summaries of surveys, should be with the Wage and Hour National Office because National Office has responsibility for the Davis-Bacon survey program. If the response from this initial contact is not satisfactory, then the process described in 2.) and 3.) should be followed.

With regard to any other matter not yet ripe for the formal process described here, initial contact should be with the Branch of Construction Wage Determinations. Write to:

Branch of Construction Wage Determinations
Wage and Hour Division
U.S. Department of Labor
200 Constitution Avenue, N.W.
Washington, DC 20210

2.) If the answer to the question in 1.) is yes, then an interested party (those affected by the action) can request review and reconsideration from the Wage and Hour Administrator (See 29 CFR Part 1.8 and 29 CFR Part 7). Write to:

Wage and Hour Administrator
U.S. Department of Labor
200 Constitution Avenue, N.W.
Washington, DC 20210

The request should be accompanied by a full statement of the interested party's position and by any information (wage payment data, project description, area practice material, etc.) that the requestor considers relevant to the issue.

3.) If the decision of the Administrator is not favorable, an interested party may appeal directly to the Administrative Review Board (formerly the Wage Appeals Board). Write to:

Administrative Review Board
U.S. Department of Labor
200 Constitution Avenue, N.W.
Washington, DC 20210

4.) All decisions by the Administrative Review Board are final.

25.0 PERMITS:

It shall be the sole responsibility of the successful Respondent to obtain any required permits in the name of Fort Bend County.

26.0 TAX EXEMPT:

Fort Bend County is exempt from state and local sales and use taxes under Section 151.309 of the Texas Tax Code. This project will be deemed a separate project for Texas tax purposes, and as such, Fort Bend County hereby issues its Texas Exemption for the purchase of any items qualifying for exemption under this project. Respondent is to issue its Texas Resale Certificate to vendors and subcontractors for such items qualifying for this exemption, and further, Respondent should state these items at cost.

27.0 NAME BRANDS:

Name Brands: Specifications may reference name brands and model numbers. It is not the intent of Fort Bend County to restrict these bids in such cases, but to establish a desired quality level of merchandise or to meet a pre-established standard due to like existing items. Bidders may offer items of equal stature and the burden of proof of such stature rests with them. Fort Bend County shall act as sole judge in determining equality and acceptability of products offered.

28.0 EVALUATION CRITERIA:

In order to facilitate the analysis of responses to this Proposal, Respondents are required to prepare their proposals in accordance with the instructions outlined in this part. Proposals should be prepared as simply as possible and provide a straightforward, concise description of the Respondent’s capabilities to satisfy the requirements of the Proposal. Emphasis should be concentrated on accuracy, completeness, and clarity of content. All parts, pages, figures, and tables should be numbered and clearly labeled.

28.1 Respondents are required to follow the outline below when preparing their proposals:

Tab	Title
	Title Page
	Letter of Transmittal
	Table of Contents
	Executive Summary
1	Cost
2	Understanding Scope of Work
3	Firm's Experience
4	Staff Experience
5	Proposed Schedule
6	Overall Completeness of Proposal

28.2 Any exceptions to the Proposal requirements shall be identified in the applicable section.

28.3 Executive Summary - This part of the response to the Proposal should be limited to a brief narrative highlighting the Respondent's proposal. This section should not include cost quotations. Note that the executive summary should identify the primary contacts for the Respondent.

28.4 Respondents will be evaluated utilizing the factors, as weighted below:

Tab 1

Cost (weight factor = 45%)

- Complete Exhibit I.

Tab 2

Understanding Scope of Work (weight factor = 15%)

- Respondents must express, in detail, their understanding of this specific project. In addition, describe how the project requested will be provided and managed. Describe the approach your firm will take to the required collaboration, scheduling and coordination required for this project.

Tab 3

Firm's Experience (weight factor = 15%)

- Firm Experience with Projects of Similar Size and Complexity: Such experience must be in the form of providing general contracting services for similar facilities. List a minimum of three (3) similar projects completed within the last ten (10) years; provide the name and location of each project, detailed description

of project, completion date, final cost, the client, and a contact person and phone number.

Tab 4

Staff Experience (weight factor = 10%)

- Staff Experience with Projects of Similar Size and Complexity: Such experience must be in the form of providing project management and construction services for similar facilities. List a minimum of three (3) similar projects completed within the last ten (10) years; provide the name and location of each project, the client, and a contact person and phone number and completion date. In addition, provide resumes for project superintendent and project manager who will be assigned to this project.

Tab 5

Proposed Schedule (weight factor = 10%)

- Provide project schedule.

Tab 6

Overall Completeness of Proposal (weight factor = 5%)

- Required Proof of Insurance
- Completed Respondent forms
- Completed W9 form
- Completed debt form
- Completed Contractor Acknowledgement of Stormwater Management Program form

29.0 AWARD:

The County will select the respondent whose proposal is the highest evaluated and responsible for the County. Contractual commitments are contingent upon the availability of funds, as evidenced by the issuance of a purchase order. All contracts are subject to the approval of the County's legal counsel and Commissioners' Court, prior to execution. Once awarded, the contract will be the final expression of the agreement between the parties and may not be altered, changed, or amended except by mutual agreement, in writing.

30.0 RETAINAGE:

Within thirty (30) days after receipt of each uncontested Application for Payment together with the supporting materials required, County shall advance to Contractor the uncontested amount requested in such uncontested Application for Payment, except *five* percent (5%) of the amount requested (hereinafter "Retainage") in each Application for Payment by County. The Retainage withheld shall be released upon final completion of the entire Project and verification of satisfactory work performed, unless grounds exist for withholding payment on account of other defaults by Contractor, including services provided by its sub-contractors.

31.0 LIQUIDATED DAMAGES:

If the Services are not substantially completed within the time for performance or within such additional time as may be extended by County, County will deduct from the final payment as liquidated damages and not as a penalty the sum of two hundred and fifty ($250.00) per calendar day that the Services are not substantially complete. Such sum is agreed upon as a reasonable and proper measure of the damages County will sustain.

32.0 STATE LAW REQUIREMENTS FOR CONTRACTS:

The contents of this section are required by Texas Law and are included by County regardless of content.

32.1 Agreement to Not Boycott Israel Chapter 2271 Texas Government Code: Contractor verifies that if Contractor employs ten (10) or more full-time employees and this Agreement has a value of $100,000 or more, Contractor does not boycott Israel and will not boycott Israel during the term of this Agreement.

32.2 Texas Government Code Section 2251.152 Acknowledgment: By signature on vendor form, Contractor represents pursuant to Section 2252.152 of the Texas Government Code, that Contractor is not listed on the website of the Comptroller of the State of Texas concerning the listing of companies that are identified under Section 806.051, Section 807.051 or Section 2253.153.

33.0 HUMAN TRAFFICKING:

By acceptance of this contract, Contractor acknowledges that Fort Bend County is opposed to human trafficking and that no County funds will be used in support of services or activities that violate human trafficking laws.

34.0 REQUIRED FORMS:

All respondents submitting are required to complete the attached and return with submission:

34.1 Vendor Form

34.2 W9 Form

34.3 Tax Form/Debt/Residence Certification

34.4 Contractor Acknowledgement of Stormwater Management Program

35.0 EXHIBIT:

Exhibit I: Pricing

Exhibit II: Project Manual

Exhibit III: Plans

Form **W-9**
(Rev. December 2014)
Department of the Treasury
Internal Revenue Service

Request for Taxpayer Identification Number and Certification

Give Form to the requester. Do not send to the IRS.

Print or type
See **Specific Instructions** on page 2.

1 Name (as shown on your income tax return). Name is required on this line; do not leave this line blank.

2 Business name/disregarded entity name, if different from above

3 Check appropriate box for federal tax classification; check only **one** of the following seven boxes:

☐ Individual/sole proprietor or single-member LLC ☐ C Corporation ☐ S Corporation ☐ Partnership ☐ Trust/estate

☐ Limited liability company. Enter the tax classification (C=C corporation, S=S corporation, P=partnership) ▶ _____

Note. For a single-member LLC that is disregarded, do not check LLC; check the appropriate box in the line above for the tax classification of the single-member owner.

☐ Other (see instructions) ▶

4 Exemptions (codes apply only to certain entities, not individuals; see instructions on page 3):

Exempt payee code (if any) _____

Exemption from FATCA reporting code (if any) _____

(Applies to accounts maintained outside the U.S.)

5 Address (number, street, and apt. or suite no.)

Requester's name and address (optional)

6 City, state, and ZIP code

7 List account number(s) here (optional)

Part I Taxpayer Identification Number (TIN)

Enter your TIN in the appropriate box. The TIN provided must match the name given on line 1 to avoid backup withholding. For individuals, this is generally your social security number (SSN). However, for a resident alien, sole proprietor, or disregarded entity, see the Part I instructions on page 3. For other entities, it is your employer identification number (EIN). If you do not have a number, see *How to get a TIN* on page 3.

Note. If the account is in more than one name, see the instructions for line 1 and the chart on page 4 for guidelines on whose number to enter.

Social security number

			–		–				

or

Employer identification number

		–							

Part II Certification

Under penalties of perjury, I certify that:

1. The number shown on this form is my correct taxpayer identification number (or I am waiting for a number to be issued to me); and
2. I am not subject to backup withholding because: (a) I am exempt from backup withholding, or (b) I have not been notified by the Internal Revenue Service (IRS) that I am subject to backup withholding as a result of a failure to report all interest or dividends, or (c) the IRS has notified me that I am no longer subject to backup withholding; and
3. I am a U.S. citizen or other U.S. person (defined below); and
4. The FATCA code(s) entered on this form (if any) indicating that I am exempt from FATCA reporting is correct.

Certification instructions. You must cross out item 2 above if you have been notified by the IRS that you are currently subject to backup withholding because you have failed to report all interest and dividends on your tax return. For real estate transactions, item 2 does not apply. For mortgage interest paid, acquisition or abandonment of secured property, cancellation of debt, contributions to an individual retirement arrangement (IRA), and generally, payments other than interest and dividends, you are not required to sign the certification, but you must provide your correct TIN. See the instructions on page 3.

Sign Here	**Signature of U.S. person ▶**	**Date ▶**

General Instructions

Section references are to the Internal Revenue Code unless otherwise noted.

Future developments. Information about developments affecting Form W-9 (such as legislation enacted after we release it) is at *www.irs.gov/fw9*.

Purpose of Form

An individual or entity (Form W-9 requester) who is required to file an information return with the IRS must obtain your correct taxpayer identification number (TIN) which may be your social security number (SSN), individual taxpayer identification number (ITIN), adoption taxpayer identification number (ATIN), or employer identification number (EIN), to report on an information return the amount paid to you, or other amount reportable on an information return. Examples of information returns include, but are not limited to, the following:

- Form 1099-INT (interest earned or paid)
- Form 1099-DIV (dividends, including those from stocks or mutual funds)
- Form 1099-MISC (various types of income, prizes, awards, or gross proceeds)
- Form 1099-B (stock or mutual fund sales and certain other transactions by brokers)
- Form 1099-S (proceeds from real estate transactions)
- Form 1099-K (merchant card and third party network transactions)
- Form 1098 (home mortgage interest), 1098-E (student loan interest), 1098-T (tuition)
- Form 1099-C (canceled debt)
- Form 1099-A (acquisition or abandonment of secured property)

Use Form W-9 only if you are a U.S. person (including a resident alien), to provide your correct TIN.

If you do not return Form W-9 to the requester with a TIN, you might be subject to backup withholding. See *What is backup withholding?* on page 2.

By signing the filled-out form, you:

1. Certify that the TIN you are giving is correct (or you are waiting for a number to be issued),
2. Certify that you are not subject to backup withholding, or
3. Claim exemption from backup withholding if you are a U.S. exempt payee. If applicable, you are also certifying that as a U.S. person, your allocable share of any partnership income from a U.S. trade or business is not subject to the withholding tax on foreign partners' share of effectively connected income, and
4. Certify that FATCA code(s) entered on this form (if any) indicating that you are exempt from the FATCA reporting, is correct. See *What is FATCA reporting?* on page 2 for further information.

Note. If you are a U.S. person and a requester gives you a form other than Form W-9 to request your TIN, you must use the requester's form if it is substantially similar to this Form W-9.

Definition of a U.S. person. For federal tax purposes, you are considered a U.S. person if you are:

- An individual who is a U.S. citizen or U.S. resident alien;
- A partnership, corporation, company, or association created or organized in the United States or under the laws of the United States;
- An estate (other than a foreign estate); or
- A domestic trust (as defined in Regulations section 301.7701-7).

Special rules for partnerships. Partnerships that conduct a trade or business in the United States are generally required to pay a withholding tax under section 1446 on any foreign partners' share of effectively connected taxable income from such business. Further, in certain cases where a Form W-9 has not been received, the rules under section 1446 require a partnership to presume that a partner is a foreign person, and pay the section 1446 withholding tax. Therefore, if you are a U.S. person that is a partner in a partnership conducting a trade or business in the United States, provide Form W-9 to the partnership to establish your U.S. status and avoid section 1446 withholding on your share of partnership income.

In the cases below, the following person must give Form W-9 to the partnership for purposes of establishing its U.S. status and avoiding withholding on its allocable share of net income from the partnership conducting a trade or business in the United States:

- In the case of a disregarded entity with a U.S. owner, the U.S. owner of the disregarded entity and not the entity;
- In the case of a grantor trust with a U.S. grantor or other U.S. owner, generally, the U.S. grantor or other U.S. owner of the grantor trust and not the trust; and
- In the case of a U.S. trust (other than a grantor trust), the U.S. trust (other than a grantor trust) and not the beneficiaries of the trust.

Foreign person. If you are a foreign person or the U.S. branch of a foreign bank that has elected to be treated as a U.S. person, do not use Form W-9. Instead, use the appropriate Form W-8 or Form 8233 (see Publication 515, Withholding of Tax on Nonresident Aliens and Foreign Entities).

Nonresident alien who becomes a resident alien. Generally, only a nonresident alien individual may use the terms of a tax treaty to reduce or eliminate U.S. tax on certain types of income. However, most tax treaties contain a provision known as a "saving clause." Exceptions specified in the saving clause may permit an exemption from tax to continue for certain types of income even after the payee has otherwise become a U.S. resident alien for tax purposes.

If you are a U.S. resident alien who is relying on an exception contained in the saving clause of a tax treaty to claim an exemption from U.S. tax on certain types of income, you must attach a statement to Form W-9 that specifies the following five items:

1. The treaty country. Generally, this must be the same treaty under which you claimed exemption from tax as a nonresident alien.

2. The treaty article addressing the income.

3. The article number (or location) in the tax treaty that contains the saving clause and its exceptions.

4. The type and amount of income that qualifies for the exemption from tax.

5. Sufficient facts to justify the exemption from tax under the terms of the treaty article.

Example. Article 20 of the U.S.-China income tax treaty allows an exemption from tax for scholarship income received by a Chinese student temporarily present in the United States. Under U.S. law, this student will become a resident alien for tax purposes if his or her stay in the United States exceeds 5 calendar years. However, paragraph 2 of the first Protocol to the U.S.-China treaty (dated April 30, 1984) allows the provisions of Article 20 to continue to apply even after the Chinese student becomes a resident alien of the United States. A Chinese student who qualifies for this exception (under paragraph 2 of the first protocol) and is relying on this exception to claim an exemption from tax on his or her scholarship or fellowship income would attach to Form W-9 a statement that includes the information described above to support that exemption.

If you are a nonresident alien or a foreign entity, give the requester the appropriate completed Form W-8 or Form 8233.

Backup Withholding

What is backup withholding? Persons making certain payments to you must under certain conditions withhold and pay to the IRS 28% of such payments. This is called "backup withholding." Payments that may be subject to backup withholding include interest, tax-exempt interest, dividends, broker and barter exchange transactions, rents, royalties, nonemployee pay, payments made in settlement of payment card and third party network transactions, and certain payments from fishing boat operators. Real estate transactions are not subject to backup withholding.

You will not be subject to backup withholding on payments you receive if you give the requester your correct TIN, make the proper certifications, and report all your taxable interest and dividends on your tax return.

Payments you receive will be subject to backup withholding if:

1. You do not furnish your TIN to the requester,

2. You do not certify your TIN when required (see the Part II instructions on page 3 for details),

3. The IRS tells the requester that you furnished an incorrect TIN,

4. The IRS tells you that you are subject to backup withholding because you did not report all your interest and dividends on your tax return (for reportable interest and dividends only), or

5. You do not certify to the requester that you are not subject to backup withholding under 4 above (for reportable interest and dividend accounts opened after 1983 only).

Certain payees and payments are exempt from backup withholding. See *Exempt payee code* on page 3 and the separate Instructions for the Requester of Form W-9 for more information.

Also see *Special rules for partnerships* above.

What is FATCA reporting?

The Foreign Account Tax Compliance Act (FATCA) requires a participating foreign financial institution to report all United States account holders that are specified United States persons. Certain payees are exempt from FATCA reporting. See *Exemption from FATCA reporting code* on page 3 and the Instructions for the Requester of Form W-9 for more information.

Updating Your Information

You must provide updated information to any person to whom you claimed to be an exempt payee if you are no longer an exempt payee and anticipate receiving reportable payments in the future from this person. For example, you may need to provide updated information if you are a C corporation that elects to be an S corporation, or if you no longer are tax exempt. In addition, you must furnish a new Form W-9 if the name or TIN changes for the account; for example, if the grantor of a grantor trust dies.

Penalties

Failure to furnish TIN. If you fail to furnish your correct TIN to a requester, you are subject to a penalty of $50 for each such failure unless your failure is due to reasonable cause and not to willful neglect.

Civil penalty for false information with respect to withholding. If you make a false statement with no reasonable basis that results in no backup withholding, you are subject to a $500 penalty.

Criminal penalty for falsifying information. Willfully falsifying certifications or affirmations may subject you to criminal penalties including fines and/or imprisonment.

Misuse of TINs. If the requester discloses or uses TINs in violation of federal law, the requester may be subject to civil and criminal penalties.

Specific Instructions

Line 1

You must enter one of the following on this line; **do not** leave this line blank. The name should match the name on your tax return.

If this Form W-9 is for a joint account, list first, and then circle, the name of the person or entity whose number you entered in Part I of Form W-9.

a. **Individual.** Generally, enter the name shown on your tax return. If you have changed your last name without informing the Social Security Administration (SSA) of the name change, enter your first name, the last name as shown on your social security card, and your new last name.

Note. ITIN applicant: Enter your individual name as it was entered on your Form W-7 application, line 1a. This should also be the same as the name you entered on the Form 1040/1040A/1040EZ you filed with your application.

b. **Sole proprietor or single-member LLC.** Enter your individual name as shown on your 1040/1040A/1040EZ on line 1. You may enter your business, trade, or "doing business as" (DBA) name on line 2.

c. **Partnership, LLC that is not a single-member LLC, C Corporation, or S Corporation.** Enter the entity's name as shown on the entity's tax return on line 1 and any business, trade, or DBA name on line 2.

d. **Other entities.** Enter your name as shown on required U.S. federal tax documents on line 1. This name should match the name shown on the charter or other legal document creating the entity. You may enter any business, trade, or DBA name on line 2.

e. **Disregarded entity.** For U.S. federal tax purposes, an entity that is disregarded as an entity separate from its owner is treated as a "disregarded entity." See Regulations section 301.7701-2(c)(2)(iii). Enter the owner's name on line 1. The name of the entity entered on line 1 should never be a disregarded entity. The name on line 1 should be the name shown on the income tax return on which the income should be reported. For example, if a foreign LLC that is treated as a disregarded entity for U.S. federal tax purposes has a single owner that is a U.S. person, the U.S. owner's name is required to be provided on line 1. If the direct owner of the entity is also a disregarded entity, enter the first owner that is not disregarded for federal tax purposes. Enter the disregarded entity's name on line 2, "Business name/disregarded entity name." If the owner of the disregarded entity is a foreign person, the owner must complete an appropriate Form W-8 instead of a Form W-9. This is the case even if the foreign person has a U.S. TIN.

Line 2

If you have a business name, trade name, DBA name, or disregarded entity name, you may enter it on line 2.

Line 3

Check the appropriate box in line 3 for the U.S. federal tax classification of the person whose name is entered on line 1. Check only one box in line 3.

Limited Liability Company (LLC). If the name on line 1 is an LLC treated as a partnership for U.S. federal tax purposes, check the "Limited Liability Company" box and enter "P" in the space provided. If the LLC has filed Form 8832 or 2553 to be taxed as a corporation, check the "Limited Liability Company" box and in the space provided enter "C" for C corporation or "S" for S corporation. If it is a single-member LLC that is a disregarded entity, do not check the "Limited Liability Company" box; instead check the first box in line 3 "Individual/sole proprietor or single-member LLC."

Line 4, Exemptions

If you are exempt from backup withholding and/or FATCA reporting, enter in the appropriate space in line 4 any code(s) that may apply to you.

Exempt payee code.

- Generally, individuals (including sole proprietors) are not exempt from backup withholding.
- Except as provided below, corporations are exempt from backup withholding for certain payments, including interest and dividends.
- Corporations are not exempt from backup withholding for payments made in settlement of payment card or third party network transactions.
- Corporations are not exempt from backup withholding with respect to attorneys' fees or gross proceeds paid to attorneys, and corporations that provide medical or health care services are not exempt with respect to payments reportable on Form 1099-MISC.

The following codes identify payees that are exempt from backup withholding. Enter the appropriate code in the space in line 4.

1—An organization exempt from tax under section 501(a), any IRA, or a custodial account under section 403(b)(7) if the account satisfies the requirements of section 401(f)(2)

2—The United States or any of its agencies or instrumentalities

3—A state, the District of Columbia, a U.S. commonwealth or possession, or any of their political subdivisions or instrumentalities

4—A foreign government or any of its political subdivisions, agencies, or instrumentalities

5—A corporation

6—A dealer in securities or commodities required to register in the United States, the District of Columbia, or a U.S. commonwealth or possession

7—A futures commission merchant registered with the Commodity Futures Trading Commission

8—A real estate investment trust

9—An entity registered at all times during the tax year under the Investment Company Act of 1940

10—A common trust fund operated by a bank under section 584(a)

11—A financial institution

12—A middleman known in the investment community as a nominee or custodian

13—A trust exempt from tax under section 664 or described in section 4947

The following chart shows types of payments that may be exempt from backup withholding. The chart applies to the exempt payees listed above, 1 through 13.

IF the payment is for . . .	THEN the payment is exempt for . . .
Interest and dividend payments	All exempt payees except for 7
Broker transactions	Exempt payees 1 through 4 and 6 through 11 and all C corporations. S corporations must not enter an exempt payee code because they are exempt only for sales of noncovered securities acquired prior to 2012.
Barter exchange transactions and patronage dividends	Exempt payees 1 through 4
Payments over $600 required to be reported and direct sales over $5,000[1]	Generally, exempt payees 1 through 5[2]
Payments made in settlement of payment card or third party network transactions	Exempt payees 1 through 4

[1] See Form 1099-MISC, Miscellaneous Income, and its instructions.

[2] However, the following payments made to a corporation and reportable on Form 1099-MISC are not exempt from backup withholding: medical and health care payments, attorneys' fees, gross proceeds paid to an attorney reportable under section 6045(f), and payments for services paid by a federal executive agency.

Exemption from FATCA reporting code. The following codes identify payees that are exempt from reporting under FATCA. These codes apply to persons submitting this form for accounts maintained outside of the United States by certain foreign financial institutions. Therefore, if you are only submitting this form for an account you hold in the United States, you may leave this field blank. Consult with the person requesting this form if you are uncertain if the financial institution is subject to these requirements. A requester may indicate that a code is not required by providing you with a Form W-9 with "Not Applicable" (or any similar indication) written or printed on the line for a FATCA exemption code.

A—An organization exempt from tax under section 501(a) or any individual retirement plan as defined in section 7701(a)(37)

B—The United States or any of its agencies or instrumentalities

C—A state, the District of Columbia, a U.S. commonwealth or possession, or any of their political subdivisions or instrumentalities

D—A corporation the stock of which is regularly traded on one or more established securities markets, as described in Regulations section 1.1472-1(c)(1)(i)

E—A corporation that is a member of the same expanded affiliated group as a corporation described in Regulations section 1.1472-1(c)(1)(i)

F—A dealer in securities, commodities, or derivative financial instruments (including notional principal contracts, futures, forwards, and options) that is registered as such under the laws of the United States or any state

G—A real estate investment trust

H—A regulated investment company as defined in section 851 or an entity registered at all times during the tax year under the Investment Company Act of 1940

I—A common trust fund as defined in section 584(a)

J—A bank as defined in section 581

K—A broker

L—A trust exempt from tax under section 664 or described in section 4947(a)(1)

M—A tax exempt trust under a section 403(b) plan or section 457(g) plan

Note. You may wish to consult with the financial institution requesting this form to determine whether the FATCA code and/or exempt payee code should be completed.

Line 5

Enter your address (number, street, and apartment or suite number). This is where the requester of this Form W-9 will mail your information returns.

Line 6

Enter your city, state, and ZIP code.

Part I. Taxpayer Identification Number (TIN)

Enter your TIN in the appropriate box. If you are a resident alien and you do not have and are not eligible to get an SSN, your TIN is your IRS individual taxpayer identification number (ITIN). Enter it in the social security number box. If you do not have an ITIN, see *How to get a TIN* below.

If you are a sole proprietor and you have an EIN, you may enter either your SSN or EIN. However, the IRS prefers that you use your SSN.

If you are a single-member LLC that is disregarded as an entity separate from its owner (see *Limited Liability Company (LLC)* on this page), enter the owner's SSN (or EIN, if the owner has one). Do not enter the disregarded entity's EIN. If the LLC is classified as a corporation or partnership, enter the entity's EIN.

Note. See the chart on page 4 for further clarification of name and TIN combinations.

How to get a TIN. If you do not have a TIN, apply for one immediately. To apply for an SSN, get Form SS-5, Application for a Social Security Card, from your local SSA office or get this form online at *www.ssa.gov*. You may also get this form by calling 1-800-772-1213. Use Form W-7, Application for IRS Individual Taxpayer Identification Number, to apply for an ITIN, or Form SS-4, Application for Employer Identification Number, to apply for an EIN. You can apply for an EIN online by accessing the IRS website at *www.irs.gov/businesses* and clicking on Employer Identification Number (EIN) under Starting a Business. You can get Forms W-7 and SS-4 from the IRS by visiting IRS.gov or by calling 1-800-TAX-FORM (1-800-829-3676).

If you are asked to complete Form W-9 but do not have a TIN, apply for a TIN and write "Applied For" in the space for the TIN, sign and date the form, and give it to the requester. For interest and dividend payments, and certain payments made with respect to readily tradable instruments, generally you will have 60 days to get a TIN and give it to the requester before you are subject to backup withholding on payments. The 60-day rule does not apply to other types of payments. You will be subject to backup withholding on all such payments until you provide your TIN to the requester.

Note. Entering "Applied For" means that you have already applied for a TIN or that you intend to apply for one soon.

Caution: *A disregarded U.S. entity that has a foreign owner must use the appropriate Form W-8.*

Part II. Certification

To establish to the withholding agent that you are a U.S. person, or resident alien, sign Form W-9. You may be requested to sign by the withholding agent even if items 1, 4, or 5 below indicate otherwise.

For a joint account, only the person whose TIN is shown in Part I should sign (when required). In the case of a disregarded entity, the person identified on line 1 must sign. Exempt payees, see *Exempt payee code* earlier.

Signature requirements. Complete the certification as indicated in items 1 through 5 below.

1. Interest, dividend, and barter exchange accounts opened before 1984 and broker accounts considered active during 1983. You must give your correct TIN, but you do not have to sign the certification.

2. Interest, dividend, broker, and barter exchange accounts opened after 1983 and broker accounts considered inactive during 1983. You must sign the certification or backup withholding will apply. If you are subject to backup withholding and you are merely providing your correct TIN to the requester, you must cross out item 2 in the certification before signing the form.

3. Real estate transactions. You must sign the certification. You may cross out item 2 of the certification.

4. Other payments. You must give your correct TIN, but you do not have to sign the certification unless you have been notified that you have previously given an incorrect TIN. "Other payments" include payments made in the course of the requester's trade or business for rents, royalties, goods (other than bills for merchandise), medical and health care services (including payments to corporations), payments to a nonemployee for services, payments made in settlement of payment card and third party network transactions, payments to certain fishing boat crew members and fishermen, and gross proceeds paid to attorneys (including payments to corporations).

5. Mortgage interest paid by you, acquisition or abandonment of secured property, cancellation of debt, qualified tuition program payments (under section 529), IRA, Coverdell ESA, Archer MSA or HSA contributions or distributions, and pension distributions. You must give your correct TIN, but you do not have to sign the certification.

What Name and Number To Give the Requester

For this type of account:	Give name and SSN of:
1. Individual	The individual
2. Two or more individuals (joint account)	The actual owner of the account or, if combined funds, the first individual on the account[1]
3. Custodian account of a minor (Uniform Gift to Minors Act)	The minor[2]
4. a. The usual revocable savings trust (grantor is also trustee) b. So-called trust account that is not a legal or valid trust under state law	The grantor-trustee[1] The actual owner[1]
5. Sole proprietorship or disregarded entity owned by an individual	The owner[3]
6. Grantor trust filing under Optional Form 1099 Filing Method 1 (see Regulations section 1.671-4(b)(2)(i)(A))	The grantor*
For this type of account:	**Give name and EIN of:**
7. Disregarded entity not owned by an individual	The owner
8. A valid trust, estate, or pension trust	Legal entity[4]
9. Corporation or LLC electing corporate status on Form 8832 or Form 2553	The corporation
10. Association, club, religious, charitable, educational, or other tax-exempt organization	The organization
11. Partnership or multi-member LLC	The partnership
12. A broker or registered nominee	The broker or nominee
13. Account with the Department of Agriculture in the name of a public entity (such as a state or local government, school district, or prison) that receives agricultural program payments	The public entity
14. Grantor trust filing under the Form 1041 Filing Method or the Optional Form 1099 Filing Method 2 (see Regulations section 1.671-4(b)(2)(i)(B))	The trust

[1] List first and circle the name of the person whose number you furnish. If only one person on a joint account has an SSN, that person's number must be furnished.

[2] Circle the minor's name and furnish the minor's SSN.

[3] You must show your individual name and you may also enter your business or DBA name on the "Business name/disregarded entity" name line. You may use either your SSN or EIN (if you have one), but the IRS encourages you to use your SSN.

[4] List first and circle the name of the trust, estate, or pension trust. (Do not furnish the TIN of the personal representative or trustee unless the legal entity itself is not designated in the account title.) Also see *Special rules for partnerships* on page 2.

***Note.** Grantor also must provide a Form W-9 to trustee of trust.

Note. If no name is circled when more than one name is listed, the number will be considered to be that of the first name listed.

Secure Your Tax Records from Identity Theft

Identity theft occurs when someone uses your personal information such as your name, SSN, or other identifying information, without your permission, to commit fraud or other crimes. An identity thief may use your SSN to get a job or may file a tax return using your SSN to receive a refund.

To reduce your risk:

- Protect your SSN,
- Ensure your employer is protecting your SSN, and
- Be careful when choosing a tax preparer.

If your tax records are affected by identity theft and you receive a notice from the IRS, respond right away to the name and phone number printed on the IRS notice or letter.

If your tax records are not currently affected by identity theft but you think you are at risk due to a lost or stolen purse or wallet, questionable credit card activity or credit report, contact the IRS Identity Theft Hotline at 1-800-908-4490 or submit Form 14039.

For more information, see Publication 4535, Identity Theft Prevention and Victim Assistance.

Victims of identity theft who are experiencing economic harm or a system problem, or are seeking help in resolving tax problems that have not been resolved through normal channels, may be eligible for Taxpayer Advocate Service (TAS) assistance. You can reach TAS by calling the TAS toll-free case intake line at 1-877-777-4778 or TTY/TDD 1-800-829-4059.

Protect yourself from suspicious emails or phishing schemes. Phishing is the creation and use of email and websites designed to mimic legitimate business emails and websites. The most common act is sending an email to a user falsely claiming to be an established legitimate enterprise in an attempt to scam the user into surrendering private information that will be used for identity theft.

The IRS does not initiate contacts with taxpayers via emails. Also, the IRS does not request personal detailed information through email or ask taxpayers for the PIN numbers, passwords, or similar secret access information for their credit card, bank, or other financial accounts.

If you receive an unsolicited email claiming to be from the IRS, forward this message to *phishing@irs.gov.* You may also report misuse of the IRS name, logo, or other IRS property to the Treasury Inspector General for Tax Administration (TIGTA) at 1-800-366-4484. You can forward suspicious emails to the Federal Trade Commission at: *spam@uce.gov* or contact them at *www.ftc.gov/idtheft* or 1-877-IDTHEFT (1-877-438-4338).

Visit IRS.gov to learn more about identity theft and how to reduce your risk.

Privacy Act Notice

Section 6109 of the Internal Revenue Code requires you to provide your correct TIN to persons (including federal agencies) who are required to file information returns with the IRS to report interest, dividends, or certain other income paid to you; mortgage interest you paid; the acquisition or abandonment of secured property; the cancellation of debt; or contributions you made to an IRA, Archer MSA, or HSA. The person collecting this form uses the information on the form to file information returns with the IRS, reporting the above information. Routine uses of this information include giving it to the Department of Justice for civil and criminal litigation and to cities, states, the District of Columbia, and U.S. commonwealths and possessions for use in administering their laws. The information also may be disclosed to other countries under a treaty, to federal and state agencies to enforce civil and criminal laws, or to federal law enforcement and intelligence agencies to combat terrorism. You must provide your TIN whether or not you are required to file a tax return. Under section 3406, payers must generally withhold a percentage of taxable interest, dividend, and certain other payments to a payee who does not give a TIN to the payer. Certain penalties may also apply for providing false or fraudulent information.

Job No.: _____

TAX FORM/DEBT/ RESIDENCE CERTIFICATION
(for Advertised Projects)

Taxpayer Identification Number (T.I.N.): _____

Company Name submitting Bid/Proposal: _____

Mailing Address: _____

Are you registered to do business in the State of Texas? Yes No

If you are an individual, list the names and addresses of any partnership of which you are a general partner or any assumed name(s) under which you operate your business

_____

_____

I. **Property:** List all taxable property in Fort Bend County owned by you or above partnerships as well as any d/b/a names. Include real and personal property as well as mineral interest accounts. (Use a second sheet of paper if necessary.)

Fort Bend County Tax Acct. No.*	Property address or location**
_____	_____
_____	_____
_____	_____
_____	_____

** This is the property account identification number assigned by the Fort Bend County Appraisal District.*

*** For real property, specify the property address or legal description. For business personal property, specify the address where the property is located. For example, office equipment will normally be at your office, but inventory may be stored at a warehouse or other location.*

II. **Fort Bend County Debt** - Do you owe any debts to Fort Bend County (taxes on properties listed in I above, tickets, fines, tolls, court judgments, etc.)?

Yes No If yes, attach a separate page explaining the debt.

III. **Residence Certification** - Pursuant to Texas Government Code §2252.001 *et seq.*, as amended, Fort Bend County requests Residence Certification. §2252.001 *et seq.* of the Government Code provides some restrictions on the awarding of governmental contracts; pertinent provisions of §2252.001 are stated below:

(3) "Nonresident bidder" refers to a person who is not a resident.

(4) "Resident bidder" refers to a person whose principal place of business is in this state, including a contractor whose ultimate parent company or majority owner has its principal place of business in this state.

I certify that _____ is a Resident Bidder of Texas as defined in Government Code
[Company Name]
§2252.001.

I certify that _____ is a Nonresident Bidder as defined in Government Code
[Company Name]
§2252.001 and our principal place of business is _____.
[City and State]

Mandatory Form

Contractor Acknowledgement of Storm Water Management Program

I hereby acknowledge that I am aware of the stormwater management program and standard operating procedures developed by Fort Bend County in compliance with the TPDES General Permit No. TXR040000. I agree to comply with all applicable best management practices and standard operating procedures while conducting my services for Fort Bend County. I agree to conduct all services in a manner that does not introduce illicit discharges of pollutants to streets, stormwater inlets, drainage ditches or any portion of the drainage system. The following materials and/or pollutant sources must not be discharged to the drainage system as a result of any services provided:

1. Grass clippings, leaves, mulch, rocks, sand, dirt or other waste materials resulting from landscaping activities, (except those materials resulting from ditch mowing or maintenance activities)
2. Herbicides, pesticides and/or fertilizers, (except those intended for aquatic use)
3. Detergents, fuels, solvents, oils and/or lubricants, other equipment and/or vehicle fluids,
4. Other hazardous materials including paints, thinners, chemicals or related waste materials,
5. Uncontrolled dewatering discharges, equipment and/or vehicle wash waters,
6. Sanitary waste, trash, debris, or other waste products
7. Wastewater from wet saw machinery,
8. Other pollutants that degrade water quality or pose a threat to human health or the environment.

Furthermore, I agree to notify Fort Bend County immediately of any issue caused by or identified by:

_____

(Company/Contractor)

that is believed to be an immediate threat to human health or the environment.

_____ _____

Contractor Signature Date

_____

Printed Name

_____

Title

RFP 25-023
Construction of the Black Cowboy Museum

Exhibit I: Pricing Form

Total Bid

$_____

Calendar days for completion _____

Acknowledgement of Receipt of Addendum(s), if issued by Purchasing, to the Request for Proposal Document.

Addendum No 1 dated _____ Received _____

Addendum No 2 dated _____ Received _____

Addendum No 3 dated _____ Received _____

_____
Name of Respondent

_____
Signature of Authorized Representative

_____
Printed Name of Representative

FORT BEND COUNTY
PROJECT MANUAL

Issued For Bid and
Construction

Due Date and Time:
Monday, September 23, 2024

Black Cowboy Museum

VCS Architects
19251 Purus Dr. Porter, TX
77365

Dvaughn@VCSArch.com
281.271.7116

DOCUMENT 000107 - SEALS PAGE

1.1 DESIGN PROFESSIONALS OF RECORD

A. Architect:

1. VCS Architects
2. 10998
3. Responsible for Divisions 01-49 Sections except where indicated as prepared by other design professionals of record.

B. Civil Engineer:

1. WECS Engineers
2. 98053
3. Responsible for Sections in Divisions 02, 03, 31, 32 and 33.

END OF DOCUMENT 000107

DOCUMENT 000110 - TABLE OF CONTENTS

DIVISION 00 — PROCUREMENT AND CONTRACTING REQUIREMENTS
000107 – SEALS PAGE
000110 – TABLE OF CONTENTS
000115 – LIST OF DRAWING SHEETS
003132 – GEOTECHNICAL REPORT

DIVISION 01 — GENERAL REQUIREMENTS
011000 - SUMMARY
012000 – PRICE AND PAYMENT PROCEDURES
012500 - SUBSTITUTION PROCEDURES
012600 - CONTRACT MODIFICATION PROCEDURES
013000 – ADMINISTRATIVE REQUIREMENTS
013223 – SURVEY AND LAYOUT DATA
013300 - SUBMITTAL PROCEDURES
014000 - QUALITY REQUIREMENTS
014200 - REFERENCES
015000 - TEMPORARY FACILITIES AND CONTROLS
016000 - PRODUCT REQUIREMENTS
017000 - EXECUTION AND CLOSEOUT REQUIREMENTS
017419 - CONSTRUCTION WASTE MANAGEMENT AND DISPOSAL
017836 – WARRANTIES AND GUARANTEES

DIVISION 03 — CONCRETE
032000 – CONCRETE REINFORCING
033000 – CAST-IN-PLACE CONCRETE

DIVISION 04 — MASONRY
042000 - UNIT MASONRY
047300 – STONE CLADDING

DIVISION 05 — METALS
050510 - METAL FINISHES
051200 – STRUCTURAL STEEL FRAMING
052100 – STEEL JOIST FRAMING
053113 – STEEL FLOOR DECKING
053123 – STEEL ROOF DECKING
054000 – COLD-FORMED METAL FRAMING
055113 - METAL PAN STAIRS

DIVISION 06 — WOOD, PLASTICS, AND COMPOSITES
061053 – MISCELLANEOU ROUGH CARPENTRY
064013 – EXTERIOR ARCHITECTURAL WOODWORK
064113 – WOOD-VENEER-FACED ARCHITECTURAL CABINETS

DIVISION 07 — THERMAL AND MOISTURE PROTECTION
071416 – CARLISLE COATING AND WATERPROOFING
071604 – CONCRETE FLOOR MOISTURE TESTING
071605 – WATER VAPOR EMISSION CONTROL SYSTEM
072100 - THERMAL INSULATION
072726 - FLUID-APPLIED MEMBRANE AIR BARRIERS
078413 - PENETRATION FIRESTOPPING
079200 - JOINT SEALANTS

DIVISION 08 — OPENINGS
081113 - HOLLOW METAL DOORS AND FRAMES
081416 – PLASTIC LAMINATE FACED WOOD DOORS
084113 - ALUMINUM-FRAMED ENTRANCES AND STOREFRONTS
085113 - ALUMINUM WINDOWS
087100 - DOOR HARDWARE

DIVISION 09 — FINISHES
092216 - NON-STRUCTURAL METAL FRAMING

092900 - GYPSUM BOARD
093000 - TILING
095100 – ACOUSTICAL CEILINGS
096513 – RESILIENT BASE AND ACCESSORIES
096813 - TILE CARPETING (CPT)
099000 – PAINTING AND COATING

DIVISION 10 — SPECIALTIES
101400 - SIGNAGE
102113 - TOILET COMPARTMENTS
102800 - TOILET ACCESSORIES

DIVISION 12 — FURNISHINGS
123640 – SOLID SURFACING COUNTERTOPS (STAINLESS STEEL AND STONE)
124000 – WOOD BURNING FIREPLACE

DIVISION 31 — EARTHWORK
311100 – CLEARING AND GRUBBING
311313.13 – WASTE MATERIAL DISPOSAL
312000 – EARTHWORK (UNDER PAVING AND SITE APPURTENANCES)
312300 – CONSTRUCTION OF UNDERGROUND UTILITIES
312316.16 – STRUCTURAL EXCAVATION AND BACKFILL
312323.16 – CEMENT STABILIZED SAND BEDDING AND BACKFILL
313213.19 – LIME STABILIZED SUBGRADE
313213.20 – HYDRATED LIME AND LIME SLURRY
313213.21 – LIME-FLYASH STABILIZED SUBGRADE

DIVISION 32 — EXTERIOR IMPROVEMENTS
321313 - CONCRETE PAVING
328000 – LANDSCAPE IRRIGATION SYSTEM
329119.13 - TOPSOIL
329213 – HYDRO-MULCH
329223 - FERTILIZER
329223.16 – SOLID SODDING

DOCUMENT 000115 - LIST OF DRAWING SHEETS

1.1 LIST OF DRAWINGS

A. List of Drawings: Drawings consist of the following Contract Drawings and other drawings of type indicated, as modified by subsequent Addenda and Contract modifications:

GENERAL

A-000	COVER SHEET
A-001	INDEX, CODE & PROJECT INFORMATION
A-002	GUIDELINES FOR COMPLIANCE WITH TAS
A-003	OVERALL LIFE SAFETY PLAN

CIVIL

C0.1	CONSTRUCTION NOTES
CO.2	CONSTRUCTION NOTES
C1.0	TOPOGRAPHIC SURVEY
C2.0	DEMOLITON PLAN
C2.1	DEMOLITON PLAN
C3.0	SITE PLAN
C3.1	SITE PLAN
C4.0	DRAINAGE AREA MAP
C4.1	DRAINAGE PLAN
C4.2	DRAINAGE PLAN
C4.3	DRAINAGE CALCULATIONS
C4.4	DETENTION POND PLAN & PROFILE
C4.5	DETENTION POND PLAN & PROFILE
C5.0	PAVING AND GRADING
C5.1	PAVING AND GRADING
C6.0	UTILITY PLAN
C7.0	STORM WATER POLLUTION PRVENTION PLAN
C8.0	STANDARD DETAILS
C8.1	STANDARD DETAILS
C8.2	STANDARD DETAILS
C8.3	STANDARD DETAILS

C8.4	STANDARD DETAILS
C8.5	STANDARD DETAILS
C8.6	STANDARD DETAILS

LANDSCAPE

L-101	OVERALL LANDSCAPING SITE PLAN
L-102	LANDSCAPE PLANTING NOTES AND DETAILS
IR-1	IRRIGATION PLAN
IR-DETAILS	IRRIGATION DETAILS

STRUCTURAL

S0.01	STRUCTURAL GENERAL NOTES
S0.02	STRUCTURAL GENERAL NOTES
S1.01	FOUNDATION PLAN
S1.02	MEZZANINE PLAN
S1.03	ROOF PLAN
S3.00	STAIR PLAN AND DETAILS
S4.00	TYPICAL FOUNDATION DETAILS
S4.01	TYPICAL FOUNDATION DETAILS
S4.02	TYPICAL FOUNDATION DETAILS
S4.05	FOUNDATION DETAILS
S4.06	FOUNDATION DETAILS
S4.15	TYPICAL WALL DETAILS
S4.16	TYPICAL WALL DETAILS
S4.20	TYPICAL FLOOR DETAILS
S4.21	TYPICAL FLOOR DETAILS
S4.30	STEEL DETAILS
S4.35	ROOF DETAILS
S4.40	STEEL FRAME DETAILS
S4.41	BRACE ELEVATION DETAILS

ARCHITECTURE

AS-100	OVERALL SITE PLAN
AS-101	ENLARGED SITE PLANS ELEVATIONS & DETAILS
AS-102	ENLARGED SITE PLANS ELEVATIONS & DETAILS
A-101	OVERALL FIRST AND SECON FLOOR PLANS
A-102	OVERALL FIRST AND SECOND FLOOR RCP’S

A-103	OVERALL ROOF PLAN
A-201	EXTERIOR ELEVATIONS
A-202	EXTERIOR ELEVATIONS
A-301	BUILDING SECTIONS
A-311	ARCHITECTURAL WALL SECTIONS
A-312	ARCHITECTURAL WALL SECTIONS
A-401	ARCHITECTURAL ENLARGED PLANS AND INTERIOR ELEVATIONS
A-402	ARCHITECTURAL ENLARGED STAIR PLANS AND SECTIONS
A-501	EXTERIOR DETAILS
A-511	EXTERIOR DETAILS
A-512	EXTERIOR DETAILS
A-601	ARCHITECTURAL PARTITION SCHEDULE AND DETAILS
A-602	ARCHITECTURAL WALL PARTITION DETAILS
A-611	ARCHITECTURAL DOOR SCHEDULE/FRAME ELEVATIONS & DETAILS
A-621	WINDOW SCHEDULE
A-681	ARCHITECURAL FINISH SCHEDULE AND DETAILS

MECHANICAL

M.001	MECHANICAL SPECIFICATIONS
M.002	HVAC DESIGN PLAN – LEVEL 01
M.003	HVAC DESIGN PLAN – LEVEL 02
M.004	MECHANICAL AND VENTILATION SCHEDULES
M.005	MECHANICAL DETAILS
M.005.1	MECHANICAL DETAILS
M.006	ACCU-1 DETAILS
M.007	AHU-1 DETAILS

ELECTRICAL

E.001	ELECTRICAL SPECIFICATIONS
E.002	ELECTRICAL LIGHTING PLAN
E.003	ELECTRICAL POWER PLAN
E.004	ELECTRICAL SCHEDULES AND ONE-LINE DIAGRAM
SE-1	PHOTOMETRIC STUDY PLAN
SE-2	SITE LIGHTING PLAN
SE-3	PHOTOMETRIC DATA
SE-4	LIGHTING FIXTURE CATALOG

SE-5	LIGHTING FIXTURE CATALOG

PLUMBING

P.001	PLUMBING SPECIFICATIONS
P.002	PLUMBING WATER PLAN LEVEL 1
P.003	PLUMBING WATER PLAN LEVEL 2
P.004	PLUMBING SANITARY AND WASTE VENT LEVEL 1
P.005	PLUMBING SANITARY AND WASTE VENT LEVEL 2
P.006	PLUMBING RISER DIAGRAM
P.007	PLUMBING DETAILS
P.007.1	PLUMBING GREASE TRAP DETAILS
P.008	PLUMBING GREASE TRAP DETAILS
P.008.1	PLUMBING SAMPLE WELL DETAILS
P.009.1	THERMOSTATIC MIXING VALVE
P.009	SAMPLE WELL DETAILS
SG-001	SIGNAGE & GRAPHICS PROJECT INFORMATION
SG-101	SIGNAGE & GRAPHICS OVERALL FIRST & SECOND FLOOR PLANS
SG-201	SIGNAGE & GRAPHICS EXTERIOR ELEVATIONS
SG-202	SIGNAGE & GRAPHICS SIGN 1020 & 1021 SIGNAGE DETAILS
SG-204	SIGNANGE & GRAPHICS SIGN 1025, 1026 & 1027 SIGNAGE DETAILS
SG-205	SIGNAGE & GRAPHICS SIGN 1028, 1029 & 1030 SIGNAGE DETAILS

OTHER

INTERIOR DESIGN FINISHES + FURNISHINGS BY SHUNDRA HARRIS INTERIOS

END OF DOCUMENT 000115

DOCUMENT 003132 - GEOTECHNICAL DATA

1.1 GEOTECHNICAL DATA

A. This Document with its referenced attachments is part of the Procurement and Contracting Requirements for Project. They provide Owner's information for Bidders' convenience and are intended to supplement rather than serve in lieu of Bidders' own investigations. They are made available for Bidders' convenience and information. This Document and its attachments are not part of the Contract Documents.

B. Because subsurface conditions indicated by the soil borings are a sampling in relation to the entire construction area, and for other reasons, the Owner, the Architect, the Architect's consultants, and the firm reporting the subsurface conditions do not warranty the conditions below the depths of the borings or that the strata logged from the borings are necessarily typical of the entire site. Any party using the information described in the soil borings and geotechnical report shall accept full responsibility for its use.

C. A geotechnical investigation report for this Project, prepared by HTS, Inc. Consultants, dated September 20, 2022, is available for viewing as appended to this Document.

1. The opinions expressed in this report are those of a geotechnical engineer and represent interpretations of subsoil conditions, tests, and results of analyses conducted by a geotechnical engineer. Owner is not responsible for interpretations or conclusions drawn from the data.
2. Any party using information described in the geotechnical report shall make additional test borings and conduct other exploratory operations that may be required to determine the character of subsurface materials that may be encountered.

END OF DOCUMENT 003132

REPORT
GEOTECHNICAL INVESTIGATION
PROPOSED THE BLACK COWBOY MUSEUM AT
BATES ALLEN PARK
KENDLETON, TEXAS

PREPARED FOR:

Fort Bend County Parks & Recreation Department
5855 Sienna Springs Way, Suite 149
Missouri City, Texas 77459

PREPARED BY:

HTS, Inc. Consultants
416 Pickering Street
Houston, Texas 77091-3312

HTS Project No.: 22-S-337

September 20, 2022

HTS, Inc. Consultants
416 Pickering Street, Houston, TX 77091
www.htshouston.com

Phone: 713-692-8373
Fax: 713-692-8502
Toll Free: 1-800-692-TEST

Excellence in Engineering, Consulting, Testing and Inspection

September 20, 2022

Fort Bend County Parks & Recreation Department
5855 Sienna Springs Way, Suite 149
Missouri City, Texas 77459

Attn: Mr. Gwendolyn F. Climmons, J.D.

Re: Report
Geotechnical Investigation
Proposed The Black Cowboy Museum at
Bates Allen Park
Kendleton, Texas

HTS Project No.: 22-S-337

Dear Mr. Climmons:

HTS, Inc. Consultants is pleased to submit our geotechnical investigation report for the above referenced project. This report includes the results of field and laboratory testing, geotechnical design parameters, and recommendations pertaining to general site development.

We appreciate the opportunity to perform this geotechnical engineering study and look forward to continued participation during the design and construction phases of this project. If you have any questions pertaining to this report or if we may be of further service, please contact us at your convenience.

Respectfully submitted,
HTS, Inc. Consultants

Jubair Hossain, Ph.D., P.E.
President

STATE OF TEXAS
JUBAIR HOSSAIN
122131
LICENSED
PROFESSIONAL ENGINEER
9-20-22

HTS, Inc. Consultants
F-3478

Manas Chudasama, M.S., E.I.T
Graduate Engineer

MC/JH:rg

H:\2022\300-349\22-S-337 The Black Cowboy Museum - FB County Parks & Recreation\Report\22-337.doc

TABLE OF CONTENTS

		Page No.
1.0	Introduction and Summary	1
1.1	Introduction	1
1.2	Summary of Findings	2
1.2.1	Subsurface Soil Strata and Groundwater Conditions	2
1.2.2	Shrink/Swell Potential	5
1.3	Summary of Recommendations	5
1.3.1	Recommended Site Preparation Requirements	5
1.3.2	Straight Sided Drilled Shaft Foundation System	6
1.3.3	Recommended Alternate Foundation System and Allowable Loadings: Underreamed Drilled Piers	8
1.3.4	Recommended Alternate Foundation System and Allowable Loadings: Shallow Spread Footing	10
1.3.5	Recommended Site Preparation Requirements- Proposed Parking Areas	12
1.3.6	Design Recommendations for Proposed Pavements	14
2.0	Field Investigation	16
3.0	Laboratory Testing	16
4.0	Subsurface Conditions	17
4.1	Subsoils	17
4.2	Groundwater	17
5.0	Engineering Analyses	17
5.1	Potential Vertical Rise Analyses	18
5.2	Drilled Pier Foundation Design	18
5.3	Bearing Capacity and Settlement Analyses for Spread Footing	18
5.4	Pavement Design Analyses	19
5.5	Pavement Subgrade Soil Stabilization Analyses	19
6.0	Construction Considerations	19
6.1	Foundation Construction	19
6.2	Surface Drainage	20
7.0	Closing Remarks	20

TABLE

Table 1 – Laboratory Test Summary

TABLE OF CONTENTS (cont.)

FIGURES

Figure 1 – Vicinity Map
Figure 2 – Boring Locations
Figure 3 Straight Sided Drilled Shaft Ultimate Axial Capacity in Compression (24, 30, 36, 42, 48-inch Shafts)
Figure 4 Straight Sided Drilled Shaft Ultimate Axial Capacity in Tension (24, 30, 36, 42, 48-inch Shafts)

APPENDIX

Appendix A - Boring Logs (Boring Nos. 1 through 9)

REPORT
GEOTECHNICAL INVESTIGATION
PROPOSED THE BLACK COWBOY MUSEUM AT
BATES ALLEN PARK
KENDLETON, TEXAS

1.0 INTRODUCTION AND SUMMARY

1.1 Introduction

This report presents the results of a geotechnical investigation pertaining to the construction of the proposed museum at Bates Allen Park in Kendleton, Texas. The site for the proposed museum is shown in Figures 1 and 2.

HTS understands that the development of The Black Cowboy Museum will include construction of the museum building and parking areas. The criteria to be provided by the geotechnical investigation are as follows:

- roadway pavement subgrade soil preparation and stabilization requirements,
- rigid pavement design/construction requirements,
- site preparation recommendations for the proposed building, and
- foundation design recommendations for the proposed building.

This geotechnical investigation was performed by HTS, Inc. Consultants (HTS) for Fort Bend County Parks & Recreation Department in accordance with HTS Proposal No. 22-05191 dated April 12, 2022 and authorization by Ms. Megan Griffins on August 5, 2022.

The scope of work for this geotechnical investigation consisted of:

- drilling/sampling 9 geotechnical borings: 5 borings (Boring Nos. 1 through 5) up to a depth of 40 feet beneath the surface, within the plan area of the proposed museum building and 4 borings (Borings 6 through 9) up to a depth of 5 feet beneath the surface, within area of proposed parking as shown in Figure 2,

- performing field tests and recovering both disturbed and relatively undisturbed soil samples during drilling,

- measuring the depth to groundwater in the geotechnical borings during drilling, approximately 15 minutes after groundwater was initially encountered and immediately after the completion of drilling,

- backfilling the borings with soil cuttings after the completion of the drilling activities,

- visually classifying samples obtained and conducting laboratory tests to determine the physical and mechanical properties of the soils,
- analyzing the field and laboratory test data,
- preparing boring logs based on visual soil classifications and the results of the laboratory tests,
- performing potential vertical rise, bearing capacity, and settlement analyses for the foundation which may be used to support the proposed museum,
- performing engineering analyses as necessary to determine the design parameters for straight sided shaft with slab-on-grade foundation system,
- performing engineering analyses for a slab-on-grade foundation system consisting of drilled underreamed piers,
- performing engineering analyses as necessary to determine the design parameters for shallow spread footing foundation with slab-on-grade foundation system,
- pavement subgrade soil preparation and stabilization requirement for pavement areas,
- pavement design parameters for rigid pavement for parking spaces and driveways.
- developing and presenting recommendations concerning subgrade preparation for the lot, and
- submitting a pdf file of the geotechnical investigation report.

1.2 Summary of Findings

The pertinent findings of this geotechnical investigation pertaining to the design and construction of the proposed museum are provided below.

1.2.1 Subsurface Soil Strata and Groundwater Conditions

The subsurface soil strata at the boring locations are described:

- by the laboratory test results presented in Table 1, and
- on the boring logs provided in Appendix A.

Data from the borings suggest that the upper 40 feet of overburden soils in the area of the proposed museum consisted of 4 soil layers. Descriptions of these soil layers are provided below:

LAYER	DEPTH BELOW GROUND SURFACE (FT)	SOIL DESCRIPTION (PROPOSED MUSEUM BUILDING)
I	0 – 23	Dark brown, brown, light gray, tan and gray LEAN CLAY WITH SAND and LEAN CLAY, stiff to hard with small roots, rock fragments, calcareous nodules and ferrous nodules (encountered in Boring Nos. 1, 3 and 4).
II	0 – 33	Reddish brown, brown, light gray, tan and gray FAT CLAY WITH SAND and FAT CLAY, stiff to hard with small roots, ferrous nodules, and slickensides.
III	23 – 40	Light brown, tan, and reddish brown POORLY GRADED SAND WITH SILT, medium dense to very dense (encountered in Boring Nos. 1, 2, 3, 5 only).
IV	28 – 40	Tan SILTY SAND, medium dense to very dense (encountered in Boring Nos. 4 only).

Laboratory testing was performed on selected samples of the subsurface materials obtained to classify the soils in accordance with ASTM D 2487 and to define the engineering properties of the soils. Portions of the test results indicating the high and low values of specific testing are provided in the table below:

LABORATORY DATA – PROPOSED MUSEUM BUILDING											
LAYER	DEPTH (FT)	LIQUID LIMIT (%)		PLASTICITY INDEX (%)		MOISTURE CONTENT (%)		PASSING NO. 200 SIEVE (%)		UNCONFINED COMPRESSIVE STRENGTH (TSF)	
		HIGH	LOW	HIGH	LOW	HIGH	LOW	HIGH	LOW	HIGH	LOW
I	0 – 23	48	37	29	20	26.4	10.4	97.3	73.5	10.5	1.7
II	0 – 33	61	51	39	31	21.6	14.0	99.7	71.8	12.8	1.6
III	23 - 40	--		--		24.2	3.7	12.0	5.8	N/A	
IV	28 – 40	--		--		14.2		12.9		N/A	

-- No sample was tested **N/A = Not Applicable for disturbed samples**

Data from the borings suggest that the upper 5 feet of overburden soils in the area of the proposed parking consisted of 1 soil layer. A description of this soil layer is provided below:

LAYER	DEPTH BELOW GROUND SURFACE (FT)	SOIL DESCRIPTION (PROPOSED PARKING AREA)
I	0 – 5	Gray, light brown, dark brown and brown FAT CLAY WITH SAND and FAT CLAY, firm to hard with small roots, ferrous nodules, and calcareous nodules.

Laboratory testing was performed on selected samples of the subsurface materials obtained to classify the soils in accordance with ASTM D 2487 and to define the engineering properties of the soils. Portions of the test results indicating the high and low values of specific testing are provided in the table below:

LABORATORY DATA – PARKING AREA											
LAYER	DEPTH (FT)	LIQUID LIMIT (%)		PLASTICITY INDEX (%)		MOISTURE CONTENT (%)		PASSING NO. 200 SIEVE (%)		UNCONFINED COMPRESSIVE STRENGTH (TSF)	
		HIGH	LOW	HIGH	LOW	HIGH	LOW	HIGH	LOW	HIGH	LOW
I	0 – 5	58	52	37	37	21.8	16.1	86.4	83.6	10.4	1.8

-- No sample was tested.

Groundwater was measured during drilling and after the completion of drilling. The results of these measurements are presented in the following table.

BORING NO.	TOTAL DEPTH OF BORING (FT.)	DEPTH TO WATER DURING DRILLING (FT.)	DEPTH TO WATER APPROXIMATELY 15 MINUTES AFTER INITIALLY ENCOUNTERED (FT.)
1	40	Dry	Dry
2	40	Dry	Dry
3	40	32.8	32
4	40	32.5	32.5
5	40	32	31.8
6	5	Dry	Dry
7	5	Dry	Dry
8	5	Dry	Dry
9	5	Dry	Dry

The borings were backfilled with soil cuttings after the completion of drilling activities.

1.2.2 Shrink/Swell Potential

The overburden soils at the proposed site are classified as having a medium potential for vertical movement (shrink/swell). The maximum potential vertical rise (PVR) of the upper 10 feet of the site soils, based on worst case soil moisture conditions, is about 3 inches.

1.3 Summary of Recommendations

Recommendations are provided below pertaining to the design and construction of the straight sided shaft, underreamed drilled piers or shallow spread footing slab-on-grade foundation for the proposed museum.

1.3.1 Recommended Site Preparation Requirements

It is recommended that site preparation for the proposed museum that is included in this investigation be performed by:

- establishing site drainage and installing storm water drainage structures, if required,
- overexcavating in situ soils at least to a depth of 3 feet to allow for placement of properly compacted select fill,
- proofrolling the exposed subgrade soils with a 15-ton roller or other equivalent suitable equipment as approved by the engineer, observing the soils during proofrolling so as to detect any wet, soft, or unstable soils and treating such soils with suitable drying or stabilizing agents or removing the unsuitable soils and replacing with properly compacted select fill,
- compacting the exposed subgrade to an in-place dry density equal to at least 95% of the maximum standard dry density at a moisture content within ± 2% of the optimum moisture content as determined by ASTM D 698, and
- placing properly compacted select fill to a depth of at least 3 feet or as necessary to achieve the desired subgrade elevation.

Select fill should consist of a clayey sand or inactive lean clay with a maximum liquid limit of 35 and a plasticity index ranging from 8 to 20. The select fill should be placed in 8-inch thick loose lifts and compacted to an in-place dry density equal to at least 95% of the maximum dry density a moisture content within ± 2% of the optimum moisture content in accordance with ASTM D 698 criteria. The select fill should be placed/compacted within the proposed building perimeter and for a distance of at least 5 feet beyond the proposed building perimeter, where applicable.

Note: When the total thickness of fill material and select fill at any location of the building area exceeds 4 feet, the fill material should be placed in 8-inch thick loose lifts and compacted to an in place dry density equal to at least 98% of the maximum standard dry density (ASTM D 698) at a moisture content within ± 2% of the optimum moisture content for the entire building area.

Using the criteria and recommendation discussed above should reduce the potential vertical rise (PVR) of the subgrade soils beneath the slab-on-grade to about 1-inch.

Depending on weather conditions, difficulty may be encountered in adequately densifying/compacting the surficial soils. If the surficial soils are unsuitably wet, excess pore pressures ("pumping") may develop and excess displacement of the subgrade soils may occur during site preparation. If the site subgrade soils become unsuitably wet, the construction contractor should:

- dry the soils to within ± 2% of the optimum moisture content by discing these materials,
- dry the soils by blending a stabilizing agent (lime or fly-ash) with the unsuitably wet soil, or
- remove the unsuitably wet soils and replace with properly compacted select fill having an acceptable moisture content.

1.3.2 <u>Recommended Foundation System and Allowable Loadings: Straight Sided Drilled Shaft Foundation System</u>

The structural load from the proposed museum may be supported on straight sided drilled shafts. Based on the soil profile defined by Boring Nos. 1 through 5, we have developed pile capacity values that could be used to design the foundations that will support the structure loads and are presented in Figures 3 and 4.

The total minimum shaft length should be at least 20 feet below the existing ground surface.

A skin friction and a point bearing drilled shaft is designed to transmit part of its load to the various strata through skin friction and the remainder by bearing at its tip. In this type of load transfer, the majority of the load is often resisted by skin friction. The length of the shaft is a function of the design load with the allowable friction resistance of the soils acting on its cumulative perimeter with depth and the allowable bearing strength at the tip.

- Using the static method analysis and soil profiles determined, the ultimate axial capacities were determined for the 24-inch, 30-inch, 36-inch, 42-inch, 48 inch, straight drilled shafts (shown on Figures 3 and 4).

The ultimate axial capacity in compression of a drilled shaft is due to the contribution of the end bearing and skin friction of the drilled shaft. On the other hand, the ultimate axial capacity in tension of a drilled shaft is derived from the skin friction in tension of the drilled shaft plus the weight of the drilled shaft.

To obtain allowable drilled shaft capacities from the design curves, the following recommendations should be used.

- For a drilled shaft in compression, factors of safety of 2 should be applied to the calculated ultimate capacities derived from the curves. It will be necessary for the designer to add the net weight of the drilled shaft to the dead load when sizing the foundations.

- For a drilled shaft in tension, a factor of safety of 3 should be applied to the ultimate capacities derived from the curve. The weight of the drilled shaft may also be used to counter uplift loading conditions.

For an isolated drilled shaft designed with the computed ultimate capacities and recommended factor of safety, the settlement should be about 0.5-inch.

Drilled shaft excavations should not be made within 3 shaft diameters (edge to edge) of drilled shaft which have been concreted within the last 24 hours.

Caving of drilled shaft excavations is likely to occur during the construction/ installation of the drilled shaft if the excavation depth exceeds 23 feet due to presence of poorly graded sands for depths above the groundwater. If drilled shaft excavation experiences some form of caving, the adverse effects should be prevented by the use of steel casing or the use of bentonite slurry drilling. The drilled shafts should be installed in accordance with Item 416 of TxDOT specifications or ACI 336.1 specifications or in accordance with the guidelines provided in FHWA-NHI-10-016.

A trial pier is recommended prior to construction to assure that the drilled pier excavations will remain open and free from debris due to sloughing and/or caving.

Slab-on-Grade Floor System:

A slab-on-grade floor may be used with site preparation performed as described in Section 1.3.1 above. It is suggested that cushion sand (leveling sand) not be placed within the areas of the slab-on-grade floor. If cushion sand becomes wet, erosion and/or settling of the sand may occur which can result in the formation of voids beneath the floors and associated structural distress.

Grade beams should be at least 12 inches wide, extend at least 1.5 feet below finished grade, and be founded on drilled piers. The grade beams may be founded directly on the subgrade void soils (i.e., boxes are not required).

For the purpose of concrete slab-on-grade design, the recommended structural fill soils should exhibit a modulus of subgrade reaction (for a 1-foot by 1-foot plate) of at least 125 pci when compacted to at least 95 percent of their standard proctor maximum dry density.

For straight sided shaft foundations, the soil as well as the rigidity of the shaft/piles resists the lateral loads on the foundation. The rigidity of the shaft/piles is a function of structural variables such as concrete strength, reinforcement details, as well as the structural fixity (restraint) provided at shaft head by caps or column connections. Many of these variables are only known during the detailed structural design; therefore, the project structural engineer typically performs the evaluation of the lateral load capacity and/or serviceability for the drilled shafts/piles.

The relationship between the soil resistance (p) and pile deflection (y) is commonly referred to as 'p-y'. Along the depth of the shaft/pile, soil resistance (p) is expressed as a non-linear function of lateral shaft/pile deflection (y). Various researchers developed 'p-y' criteria for different kinds of soils. The 'p-y' curves can be automatically generated utilizing the computer program LPILE. The program LPILE was developed by Lymon Reese and Shin-Tower Wang, Ensoft, Inc. Recommended parameters for implementing the p-y method are provided in the table below.

Depth (Feet)	'P-Y' Criteria	Effective Unit Weight, (γ') (pcf)	Su (ksf) or Φ (Degree)	K (pci)	ε50
0 -28	Hard Clay	67.5	Su = 2.5	500	0.005
28 – 32	Sand (above water table)	62.6	Φ = 34°	225	-
32 – 40	Sand (submerged)	62.6	Φ = 34°	125	-

Note: Su-Undrained Shear Strength (ksf); k-modulus of subgrade reaction (pci); ε50 – strain corresponding to ½ the principal stress; Φ – Friction Angle (degree).

1.3.3 Recommended Alternate Foundation System and Allowable Loadings : Underreamed Drilled Piers

Alternatively, Underreamed drilled piers and grade beams may be used to support the proposed building loads as described below. The building floors may consist of slab-on-grade with site preparation as previous discussed in Sections 1.3.1. Foundation recommendations pertaining to the proposed building columns, walls, grade beams, and floor are provided below.

- **Building Columns and Walls - Drilled Piers**
  Building columns and walls may be founded on underreamed drilled piers

founded at a depth of 15 feet below the ground surface at the time of this geotechnical investigation. The underreamed drilled piers (maximum pier bell diameter of 8 feet) should be designed for maximum net allowable bearing pressures of 4,000 psf for axial compression dead loads plus sustained live loads and 6,000 psf for axial compression dead loads plus sustained and transient live loads.

The edge-to-edge spacing of the drilled piers should be equal to a minimum of 1.2 times the average drilled pier bell diameter of adjacent drilled piers. Should piers be located closer than 1.2 bell diameters, measured edge-to-edge, a reduction in the allowable net bearing pressures will be required. HTS should be notified for further evaluation in order to determine the appropriate reduction values.

Allowable shaft friction in compression and tension for the portions of the drilled pier shafts below a depth of 5 feet beneath finished grade is 500 psf. The ultimate shaft friction which could be exerted against the drilled pier shafts as a result of swelling soils is 1000 psf.

Drilled piers should be belled in order to provide resistance against pullout forces which may be exerted on the drilled pier shafts by swelling soils.

The uplift capacity of underreamed piers can be determined from the following semi-empirical relationships:

$$Qu = Nc * Su * \pi * (D^2 - d^2) / 4$$

Where:
- Qu = ultimate uplift capacity, tons
- Nc = 6.0 (conservatively)
- Su = undrained Shear Strength (use 1.0), tons per square feet
- D = diameter of underream or bell, feet
- d = diameter of shaft, feet
- H = depth to base of bell below ground surface, feet

Use a factor of safety of 2.0 to obtain the allowable uplift capacity.

Caving of pier bell excavations may occur during construction of drilled piers as a result of the presence of sand fissures, sand seams, and slickensides in the overburden soils. The adverse effects of pier bell excavation caving can be limited by:

- the designer using a maximum bell-to-shaft diameter ratio of 3,
- the designer minimizing pier bell diameters, and
- the construction contractor minimizing the time between the completion of pier bell under-reaming and concrete placement.

A trial pier may be constructed prior to construction to assure that the pier bell excavations will remain open and free from debris due to sloughing and/or caving.

For cases where drilled pier excavations cave so rapidly that concrete cannot be placed quickly enough to allow construction of the piers, it will be necessary to use casing to maintain an open drilled pier excavation.

Use of the above recommended allowable net foundation bearing pressures provides for:

- a safety factor of at least 3.0 against a drilled pier bearing failure under axial compression dead loads plus sustained live loads,

- a safety factor of at least 2.0 against a drilled pier bearing failure under axial compression dead loads plus sustained and transient live loads, and

- a total settlement of 1-inch or less for a maximum pier bell diameter of 5 feet.

- **Slab-on-grade floor system:**
  A slab-on-grade floor may be used with site preparation performed as described in Section 1.3.1 above. It is suggested that cushion sand (leveling sand) not be placed within the areas of the slab-on-grade floor. If cushion sand becomes wet, erosion and/or settling of the sand may occur which can result in the formation of voids beneath the floors and associated structural distress.

  Grade beams should be at least 12 inches wide, extend at least 1.5 feet below finished grade, and be founded on drilled piers. The grade beams may be founded directly on the subgrade soils (i.e., void boxes are not required).

  For the purpose of concrete slab-on-grade design, the recommended structural fill soils should exhibit a modulus of subgrade reaction (for a 1-foot by 1-foot plate) of at least 125 pci when compacted to at least 95 percent of their standard proctor maximum dry density.

1.3.4 Recommended Alternate Foundation System and Allowable Loadings: Spread Footing Foundation System

The proposed museum building can be supported by shallow spread footing foundation system. The footing should be founded at least 4 feet below the desired finished subgrade elevation. The spread footing should be a maximum of 8-foot square. Spread footing foundation meeting the above criteria should be designed for maximum allowable net bearing pressures of 3,000 psf for axial compression dead loads plus sustained live loads and 4,500 psf for axial compression dead loads plus sustained and transient live loads.

Use of the above-recommended maximum allowable net foundation bearing pressures provides for:

- a safety factor of at least 3 against a bearing capacity failure of a spread footing under compression dead loads plus sustained live loads,

- a safety factor of at least 2 against a bearing capacity failure of a spread footing under compression dead loads plus sustained and transient live loads, and

- the maximum total settlement of each footing foundation should be about 1-inch.

Spread footings with a width no larger than 8-foot, designed as described above, should experience a total settlement of about 1-inch. If a cluster of closely spaced footings (i.e., if the center to center spacing of the footings is less than 2 times the width of the footing) are planned, HTS should be contacted to calculate the amount of settlement.

The base adhesion/frictional resistance and the passive soil resistance will resist the horizontal loads on shallow foundations. A frictional co-efficient of 0.36 may be used at the soil-concrete interface at the bottom of foundation. An ultimate passive resistance of 240 psf per foot depth is recommended. A minimum factor of safety of 2.0 is recommended to arrive at the allowable values. Passive resistance from the upper 2 feet of soil should be neglected. Also, the passive resistance of any un-compacted fill material should be neglected.

The uplift resistance of a shallow foundation formed in an open excavation will be limited to the weight of the foundation concrete and the soil above it. For design purposes, the ultimate uplift resistance can be based on effective unit weights of 120 and 150 pcf for soil and concrete, respectively above the water table. We recommend that buoyant unit weights of 60 pcf and 90 pcf be utilized in the case of submergence. These values should be reduced by an appropriate factor of safety.

Shallow Spread Footing Construction Considerations

After opening, footing excavations should be observed by a HTS representative prior to placing reinforcing steel and concrete to assess that the foundation materials are capable of supporting the design loads and are consistent with the materials discussed in this report. The exposed subgrade soil at the bottom of footing excavation should be compacted to an in-place dry density equal to at least 95% of the maximum dry density at a moisture content within 0 to 2% of the optimum moisture content in accordance with Standard Proctor (ASTM D 698) criteria.

Soft or loose soil zones encountered at the bottom of the footing excavations should be removed and replaced with properly compacted low plasticity structural fill as directed by the geotechnical engineer.

Where utility lines will cross perpendicular to spread footings, the footing should be deepened to encase the utility line, providing sleeves or flexible cushions to protect the pipes from anticipated foundation settlement, or the utility lines should be backfilled to the bottom of footing with sand-cement slurry or lean concrete. Where utility lines will be parallel to footings and will extend below the "foundation plane of influence," an imaginary 1:1 plane projected down from the bottom edge of the footing, either the footing will need to be deepened so that the pipe is above the foundation plane of influence or the utility trench will need to be backfilled with sand-cement slurry or lean concrete within the influence zone.

Surface run-off water should be drained away from the excavations and not be allowed to pond. If possible, the foundation concrete should be placed during the same day the excavation is made. If it is required that the footing excavations be left open for more than one day, they should be protected to reduce evaporation or entry of moisture.

1.3.5 Recommended Site Preparation Requirements – Proposed Parking Areas

Recommendations for subgrade soil preparation for the proposed pavement for parking areas have been developed so as to enhance the strength of the surficial soils as well as to improve the performance of the pavements. It is recommended that the subgrade soils for pavements be prepared as described below:

- Establish site drainage and install storm drainage structures in order to preclude the inundation of the site area with storm water or the lateral seepage of storm water into the pavement subgrade soils.

- Strip any vegetation and organic topsoil, as applicable, up to a depth of 6 inches.

- Proofroll the exposed subgrade soil with a 15-ton roller, or equivalent equipment, and observe the soils during proofrolling so as to detect any wet, soft, or unstable soils. Wet, soft, or unstable soils should be treated with suitable drying or stabilizing agents or the unsuitable soils should be removed and replaced with properly compacted suitable earth fill or select fill.

- Compact the exposed subgrade soil to an in-place dry density equal to at least 95% of the maximum dry density at a moisture content within ± 2% of the optimum moisture content in accordance with Standard Proctor (ASTM D 698) criteria.

- Place properly compacted select fill to a depth as necessary to bring the pavement subgrade soil to the desired grade elevation. Select fill should

consist of a clayey sand or inactive lean clay with a maximum liquid limit of 35 and a plasticity index ranging from 8 to 20. Fill materials should be placed in 8-inch thick loose lifts (6-inch compacted lifts) and compacted to an in-place dry density equal to at least 95% of the maximum dry density at a moisture content within 0 to 2% of the optimum moisture content as determined in accordance with Standard Proctor (ASTM D 698) criteria. If the depth of fill is 4 feet or more, fill material should be placed in 8-inch thick loose lifts (6-inch compacted lifts) and compacted to an in place dry density equal to at least 98% of the maximum dry density at a moisture content within 0 to 2% of the optimum moisture content in accordance with Standard Proctor (ASTM D 698) criteria.

- Stabilize the upper 6 inches of the pavement subgrade soils with lime-fly ash.

  - Lime-Fly Ash Treated Subgrade: Subgrade with select fill soil with plasticity index less than 22 should be stabilized with lime-fly ash. Stabilize the upper 6 inches of pavement subgrade soils with lime and fly ash (3% hydrated lime by dry soil weight or 16 pounds of lime per square yard of surface area and 8% fly ash by dry soil weight or 43 pounds of fly ash per square yard of surface area for a depth of 6 inches). The blended soil-lime-fly ash mixture should be compacted to an in-place dry density equal to at least 95% of the maximum dry density in accordance with Standard Proctor (ASTM D 698) criteria.

  - Lime Treated Subgrade: Subgrade with on-site soil having plasticity index more than 22 should be stabilized with lime. Stabilize the upper 6 inches of pavement subgrade soils with lime (8% hydrated lime by dry soil weight or 58 pounds of lime per square yard of surface area for a depth of 6 inches). The blended soil-lime mixture should be compacted to an in-place dry density equal to at least 95% of the maximum dry density in accordance with Standard Proctor (ASTM D 698) criteria.

The required quantities of lime-fly ash or lime for use in stabilization, as recommended above, are estimated values only. The actual quantities of lime-fly ash should be based upon tests performed on the subgrade soils at the time of construction.

Stabilization should extend a minimum of 2-foot beyond the edges of the pavements in order to preclude edge failure of the pavements.

Depending on weather conditions, difficulty may be encountered in adequately densifying/ compacting the surficial soils. If the surficial soils are unsuitably wet, excess pore pressures ("pumping") may develop and excess displacement of the subgrade soils may occur during site preparation. If the site subgrade soils become unsuitably wet, the construction contractor should:

- dry the soils to within ± 2% of the optimum moisture content by discing these materials,

- dry the soils by blending a stabilizing agent, such as lime or fly ash, with the unsuitably wet soil,

- remove the unsuitably wet soils and replace with properly compacted suitable earth fill or select fill having an acceptable moisture content, or

- increase the depth of stabilization to 12 inches instead of the 6 or 8 inches of stabilization.

1.3.6 Design Recommendations for Proposed Pavements

Rigid pavement sections for the proposed parking area pavements are provided herein. The pavement design values presented below should be considered the minimum recommended pavement/stabilized subgrade soil thicknesses, in inches.

RIGID PAVEMENT		
Material	Minimum Recommended Thickness, inches	
	Entrance and Exterior Lanes/Driveway	Car Parking Areas
Reinforced Concrete Pavement	7	6
Stabilized Subgrade	6	6

Pavement subgrade soil preparation should comply with the recommendations provided in Section 1.3.5 of this report. Pavement design parameters and assumptions are discussed in Section 5.0 of this report.

Related civil design factors such as drainage, cross-sectional configurations, surface elevations, and environmental factors that will significantly affect the service life of the pavement should be included in the preparation of the construction drawings and specifications.

Materials and Reinforcements for Concrete Pavement

Material and reinforcements requirements for the concrete pavement may be obtained by using the recommendations provided below.

Portland Cement Concrete Pavement – The materials and properties of a Portland cement concrete (PCC) pavement shall meet applicable requirements in the ACI Manual of Concrete Practice. The PCC mix should have a minimum 28-day compressive strength of 3,000 psi.

Reinforcing Steel – ACI recommends that distributed steel reinforcement is not necessary when the pavement is properly jointed to form short panel lengths that will help reduce intermediate cracking. Provided the concrete pavement is designed and constructed as stated herein, the installation of reinforcing steel is optional and should be evaluated by the design team. Proper layout and installation of the joints within the pavement is critical to help control intermediate cracking. Entrance lane and access drive areas should be designed with reinforcing steels.

In entrance lane/exterior lanes and areas where reinforcing steel is planned to be utilized in the concrete pavement by the design team, the concrete pavements should be properly reinforced and jointed (per ACI requirements), and should have No. 4 reinforcing bars, placed at 24-inch centers (for 6-inch slab) and 18-inch centers (for 7-inch slab), each way. Pre-manufactured chair supports should be used to support the reinforcing steel during concrete placement. The reinforcement should be located in the top half of the concrete section with a minimum of 2 inches of cover from the top.

Control Joint Spacing – ACI recommends a maximum control joint spacing of 15 feet for 6-inch or thicker pavements. Saw cut control joints should be placed at maximum 15-foot intervals and should be cut at a depth of at least ¼ of the pavement thickness. Saw cut control joints spaced at 10 feet usually control cracking better than the 15-foot intervals. Joints should be sawed within 12 hours of concrete placement and preferably sooner.

Expansion Joint Spacing – ACI recommends that expansion joints should be used wherever the pavement will abut a structural element subject to a different magnitude of movement, such as light poles, retaining walls, or manholes. Expansion joints should be sealed with a polyurethane sealant so that moisture infiltration into the subgrade soils and resultant concrete deterioration at the joints is minimized.

Construction Joints – When concrete is planned to be placed at different times, we recommend the use of a construction joint between paving areas. The construction joint should consist of a butt joint (not a keyway joint).

Dowels at Pavement Joints – Dowels should be used in access drive pavements. Dowels should also be used in parking lot area pavements if determined, as necessary by the design team. The dowels at the pavement joints should consist of 1-inch dowels for 7-inch pavements and 1.25-inch dowels for 8 and 9-inch pavements. The dowels should be within 12 to 14 inches in length, with 1 end treated to slip, spaced at minimum 12 inches on centers at each joint. Dowel baskets or other positive chairing is required to maintain the dowels parallel to each other and parallel to the ground. For slab diameters less than 7 inches, round dowels can be impractical or counterproductive. In these cases, alternative dowel

geometries, such as - diamond or trapezoid- shaped steel plate dowels, can be used as per ACI guidelines.

Tie bars – Tie bars should be used on the centerline joints of the entrance drives and access roads that have a single longitudinal join. Tie bars should have a minimum length of 24 inches. Tie bar spacing should be selected based on slab dimensions as described in Table 3.7 of ACI 330R.

2.0 FIELD INVESTIGATION

Nine geotechnical borings were drilled and sampled on August 27, 2022 and August 30, 2022 at the locations shown in Figure 2. The boring locations, as shown in Figure 2, were selected and staked in the field by representatives of HTS measuring from existing points of reference. Drilling, sampling, and testing were performed in accordance with applicable ASTM standards by using a truck mounted drill rig and conventional auger drilling method.

Soil sampling during the drilling of the geotechnical borings consisted of continuous sampling to 12 feet and intermittent sampling thereafter, with both disturbed and relatively undisturbed soil samples being obtained.

Disturbed samples of soil were taken directly from the auger or obtained in conjunction with standard penetration test procedures. The standard penetration test (SPT) blow count is defined as the number of SPT hammer blows that are required to advance a split spoon sampler 1 foot into the soil. One SPT hammer blow consists of a 140-pound hammer free falling for a distance of 30 inches. The results of the standard penetration test provide a basis for estimating the relative strength and compressibility of the soil profile components. The samples recovered were removed from the auger or the split spoon sampler and placed into airtight plastic bags.

Relatively undisturbed samples were obtained by hydraulically forcing sections of 3-inch outside diameter (O.D.) tubing (Shelby tube) into the subsoils. The tube samples were extruded in the field, sealed with foil, and placed into airtight plastic bags. Estimates of the unconfined compressive strengths and undrained shear strengths of the cohesive soils were obtained with pocket penetrometer readings being taken on the tube samples.

The soil samples were visually classified in accordance with ASTM D 2488 standards and methods. All samples were transported to HTS' laboratory for purposes of performing laboratory tests on selected samples.

3.0 LABORATORY TESTING

A laboratory testing program was conducted to obtain engineering properties for use in performing engineering analyses and to adjust field soil classifications. The following laboratory tests were performed:

LABORATORY TEST	TEST STANDARD
Moisture Content of Soils	ASTM D 2216
Moisture Content and In Situ Dry Density of Soils	ASTM D 2937
Percent Soil Particles Passing a No. 200 Sieve	ASTM D 1140
Liquid Limit, Plastic Limit, and Plasticity Index of Soils	ASTM D 4318
Unconfined Compressive Strength of Cohesive Soils	ASTM D 2166

The number of tests and test results are presented in the attached Table 1. All tests were performed in accordance with applicable ASTM standards and methods and soil classifications were completed in accordance with the requirements of ASTM D 2487 and ASTM 2488.

4.0 SUBSURFACE CONDITIONS

4.1 Subsoils

The subsurface soil conditions as determined from the drilling of the geotechnical borings are provided in:

- Section 1.2.1 of this report, and
- the boring logs in Appendix A.

The boring logs were prepared by using both field visual classifications and the results of laboratory testing. The stratification lines, shown on the boring logs, represent the approximate boundaries between soil types and the transitions between soil types may be gradual.

4.2 Groundwater

Groundwater conditions are described in Section 1.2.1 of this report and on the boring logs provided in Appendix A of this report. The depth to groundwater was obtained by observing the drilling operations and the free moisture contained in the samples recovered during drilling and immediately after the completion of drilling.

It is possible that seasonal variations will cause fluctuations in the water levels measured at the time of our field investigation. We recommend that the contractor determine the actual groundwater level at the site at the time of construction in order to assess the impact, if any, of the groundwater to the construction activities. It should be noted that recommendations contained in this report are based on groundwater depths at the time of this geotechnical investigation and that an accurate determination of the true groundwater level may require several days or even months of observations.

5.0 ENGINEERING ANALYSES

Engineering analyses were performed in order to determine design parameters that can be used for the design of the proposed building foundation. Analyses performed included:

- analyses of the potential heave (potential vertical rise) of the slab-on-grade foundation,
- bearing capacity, uplift capacity, and settlement analyses for straight sided shaft foundations,
- bearing capacity and settlement analyses for underreamed drilled pier foundation, and
- bearing capacity and settlement analyses for spread footing foundations.

5.1 Potential Vertical Rise Analyses

Potential vertical rise analyses were performed for the existing subgrade soils within the location of the proposed museum. The depth of seasonal moisture variation at the proposed site was estimated to be 10 feet. The estimated depth of seasonal moisture variation was based on moisture content versus depth data obtained from the soils sampled/tested. The potential vertical rise analyses were performed by using the Texas Department of Transportation (TxDOT) Test Method Tex-124-E and the results of laboratory index tests.

5.2 Drilled Pier Foundation Design

Bearing capacity analyses for drilled piers were conducted using general shear bearing capacity factors and the theory of plasticity. Drilled piers were analyzed for an embedment depth of 20 feet below the existing ground surface. The recommended minimum 20-foot depth of embedment for the drilled piers provides for:

- founding the piers below the depth of seasonal moisture variation, and
- founding the piers at a depth that will minimize the settlement of the drilled piers.

Potential settlements of drilled piers were evaluated by using:

- elastic theory to estimate immediate settlements, and
- 3-dimensional consolidation theory to estimate long-term settlements.

5.3 Bearing Capacity and Settlement Analyses for Spread Footing

Bearing capacity analyses were conducted by using general shear bearing capacity factors and the theory of plasticity. Bearing capacity analyses were conducted for spread footing foundations by using general shear bearing capacity factors.

Potential settlements of the structures considered for this project was evaluated by using:

- elastic theory to estimate immediate (elastic) settlements, and
- 3-dimensional consolidation theory to estimate long-term settlements.

5.4 Pavement Design Analyses

Concrete pavement design recommendations for proposed parking are provided in Section 1.3 of this report are based upon ACI 330R and the following parameters and assumptions:

TERMS	PARAMETERS/ASSUMPTIONS
Type of soil	Fine-grained soils in which silt and clay-size particles predominate
Modulus of Subgrade Reaction for 6-inch stabilization, k*	140 psi/in
28-day compressive Strength, f'_c	3000 psi
Car parking areas and access lanes	Category A (ADTT =10)
Entrance/exterior lanes	Category B (ADTT =25)

HTS should be contacted if anticipated traffic volume is higher for the proposed parking/access drives/driveway areas.

5.5 Pavement Subgrade Soil Stabilization Analyses

Subgrade soil stabilization requirements for the proposed pavements were developed based upon the results of laboratory testing (Atterberg Limits, percent soil particles passing a No. 200 sieve, and unit weight determinations). These requirements should be verified based on laboratory compaction tests performed as part of the construction quality control program.

6.0 CONSTRUCTION CONSIDERATIONS

The following recommendations should be followed with regard to construction of the proposed museum:

6.1 Foundation Construction

- Excavation for the foundation should be clean and free of all loose materials prior to the placement of concrete. Concrete should be placed at the foundation areas immediately upon forming, reinforcing steel placement, cleaning, and inspection.

- Fill material and fill compaction should comply with the recommendations provided in Section 1.3.1 of this report.

- Concrete should have a 4 to 6-inch slump and be placed in 1 continuous placement.

- Concrete may be allowed to drop freely in dry drilled shafts excavations containing 1-inch or less of water.

- Drilled piers with more than 1-inch of water in the bottom should be filled with concrete by the tremie method of concrete placement. Concrete should not fall against the steel reinforcing or the shaft sides.

- If casing is required, the casing should be removed as concrete is being placed. The casing should be removed in a manner that precludes the surrounding soil from invading the fresh concrete. This requires a vertical, smooth removal of the casing while maintaining the bottom of the casing below the top of the concrete a distance sufficient enough to offset the surrounding material pressure.

- Construction operations should be monitored by a qualified representative of the soil engineer.

- Materials testing should be performed so as to assure that acceptable materials and construction methods are provided by the contractor.

6.2 Surface Drainage

The following drainage precautions should be observed during construction and maintained at all times after construction has been completed:

- The ground surface surrounding the exterior of the building should be provided with erosion protection and sloped to drain away from the building in all directions. We recommend a minimum slope of 6 inches in the first 10 feet.

- Roof downspouts and drains should discharge well beyond the limits of the edges of the building foundation and be channeled to drain immediately away from the foundation.

- Excessive wetting or drying of the foundation should be avoided. Trees and other vegetation capable of withdrawing significant amounts of moisture from the subsoils should be located a distance from the nearest foundation equal to at least the expected ultimate height of the vegetation, or appropriate moisture barriers should be provided.

7.0 CLOSING REMARKS

HTS has performed a geotechnical investigation and provided recommendations pertaining to the design and construction of a foundation system for the proposed museum to be constructed at Bates Allen Park in Kendleton, Texas. This report has been prepared for the exclusive use of Fort Bend County Parks & Recreation Department in accordance with generally accepted soil and foundation engineering practices. No other warranty, expressed or implied, is made.

In the event that changes are made in the nature, design, or location of the proposed museum, the conclusions, design parameters, and recommendations contained in this report shall not be considered valid unless the changes are reviewed and the findings/recommendations of this report

are modified or verified in writing. The analyses and recommendations presented in this report are based upon data obtained from 9 geotechnical borings drilled on August 27, 2022 and August 30, 2022. The nature and extent of variations within the subsurface materials may not become evident until after construction is initiated. If significant variations in the subsurface materials are encountered during construction, it may be necessary to re-evaluate the recommendations provided in this report.

TABLE

TABLE 1

LABORATORY TEST SUMMARY

PROJECT: Proposed The Black Cowboy Museum

HTS PROJECT NO.: 22-S-337

LOCATION: Bates Allen Park
Kendleton, Texas

CLIENT: Fort Bend County Parks and Recreation

Boring No.	Sample Depth (feet)	Type of Material	Moisture Content (%)	Dry Density (pcf)	Atterberg Limits (%)			-200 Sieve (%)	Unconfined Compressive Strength (tsf)	Strain (%)	Lateral Pressure (psi)	Remarks
					LL	PL	PI					
1	0-2	Lean Clay With Sand (CL)	26.4	99.3	48	19	29	81.6	1.7 (3)	15.0	0	(1) Sample failed along diagonal shear planes.
	6-8	Lean Clay (CL)	16.4	112.9	37	17	20	94.3	7.7 (4)	3.2	0	(2) Sample failed along vertical shear planes.
	13-15	Fat Clay With Sand (CH)	15.8	119.0	54	20	34	71.8	3.2 (5)	1.9	0	(3) Sample bulged at failure.
	23.5-25	Poorly Graded Sand With Silt (SP-SM)	3.7					10.3				(4) Sample failed along sand fissures.
												(5) Sample failed along slickensides.
	33.5-35	Poorly Graded Sand With Silt (SP-SM)	19.3					8.5				
2	2-4	Fat Clay With Sand (CH)	14.0	122.9	59	21	38	75.8	12.8 (5)	4.3	0	
	8-10	Fat Clay (CH)	19.6	113.1	61	22	39	93.7	6.2 (5)	3.4	0	
	18-20	Fat Clay (CH)	18.7	114.1	54	20	34		4.7 (5)	5.2	0	
	28-30	Fat Clay (CH)	18.2	113.2	54	20	34	99.3	1.6 (5)	0.7	0	
3	4-6	Lean Clay With Sand (CL)	10.4	116.1	37	17	20	82.5	8.7 (1)	2.0	0	
	10-12	Lean Clay With Sand (CL)	15.3	116.4	47	19	28	81.3	4.7 (1)	2.5	0	
	18-20	Lean Clay (CL)	18.1	116.8	46	19	27	97.3	4.9 (2)	2.6	0	
	28-30	Fat Clay (CH)	21.1	108.5	55	21	34		3.9 (1)	2.4	0	
	38.5-40	Poorly Graded Sand With Silt (SP-SM)	17.5					12.0				
4	0-2	Lean Clay With Sand (CL)	20.5		45	19	26	73.5				
	2-4	Lean Clay With Sand (CL)	14.8	118.2					10.5 (1)	11.4	0	
	6-8	Fat Clay (CH)	14.3	115.8	51	20	31	95.1	7.2 (2)	2.3	0	
	13-15	Lean Clay With Sand (CL)	14.3	118.4	48	20	28	82.4	8.9 (2)	6.6	0	
	23-25	Fat Clay (CH)	21.5	105.1	60	22	38	99.1	1.8 (3)	0.6	0	
	33.5-35	Silty Sand (SM)	14.2					12.9				

TABLE 1

LABORATORY TEST SUMMARY

PROJECT: Proposed The Black Cowboy Museum

HTS PROJECT NO.: 22-S-337

LOCATION: Bates Allen Park
Kendleton, Texas

CLIENT: Fort Bend County Parks and Recreation

Boring No.	Sample Depth (feet)	Type of Material	Moisture Content (%)	Dry Density (pcf)	Atterberg Limits (%)			-200 Sieve (%)	Unconfined Compressive Strength (tsf)	Strain (%)	Lateral Pressure (psi)	Remarks
					LL	PL	PI					
5	2-4	Fat Clay With Sand (CH)	15.9	117.6	56	21	35	80.6	11.2 (3)	12.1	0	
	8-10	Fat Clay With Sand (CH)	14.6	118.1	51	20	31	83.7	5.9 (1)	1.5	0	
	18-20	Fat Clay With Sand (CH)	17.4	110.5	59	21	38		3.4 (5)	1.4	0	
	28-30	Fat Clay (CH)	21.6	109.1	52	20	32	99.7	4.7 (1)	4.6	0	
	38.5-40	Poorly Graded Sand With Silt (SP-SM)	24.2					5.8				
6	0-2	Fat Clay With Sand (CH)	21.8	106.4	52	20	32	85.0	1.8 (1)	9.6	0	
7	2-4	Fat Clay (CH)	16.1	120.7	56	21	35	86.4	10.4 (3)	13.1	0	
8	0-2	Fat Clay With Sand (CH)	21.5	109.8	58	21	37	83.6	6.1 (1)	8.9	0	
9	2-4	Fat Clay (CH)	17.1	115.8	55	20	35	85.7	10.3 (3)	11.7	0	

FIGURES

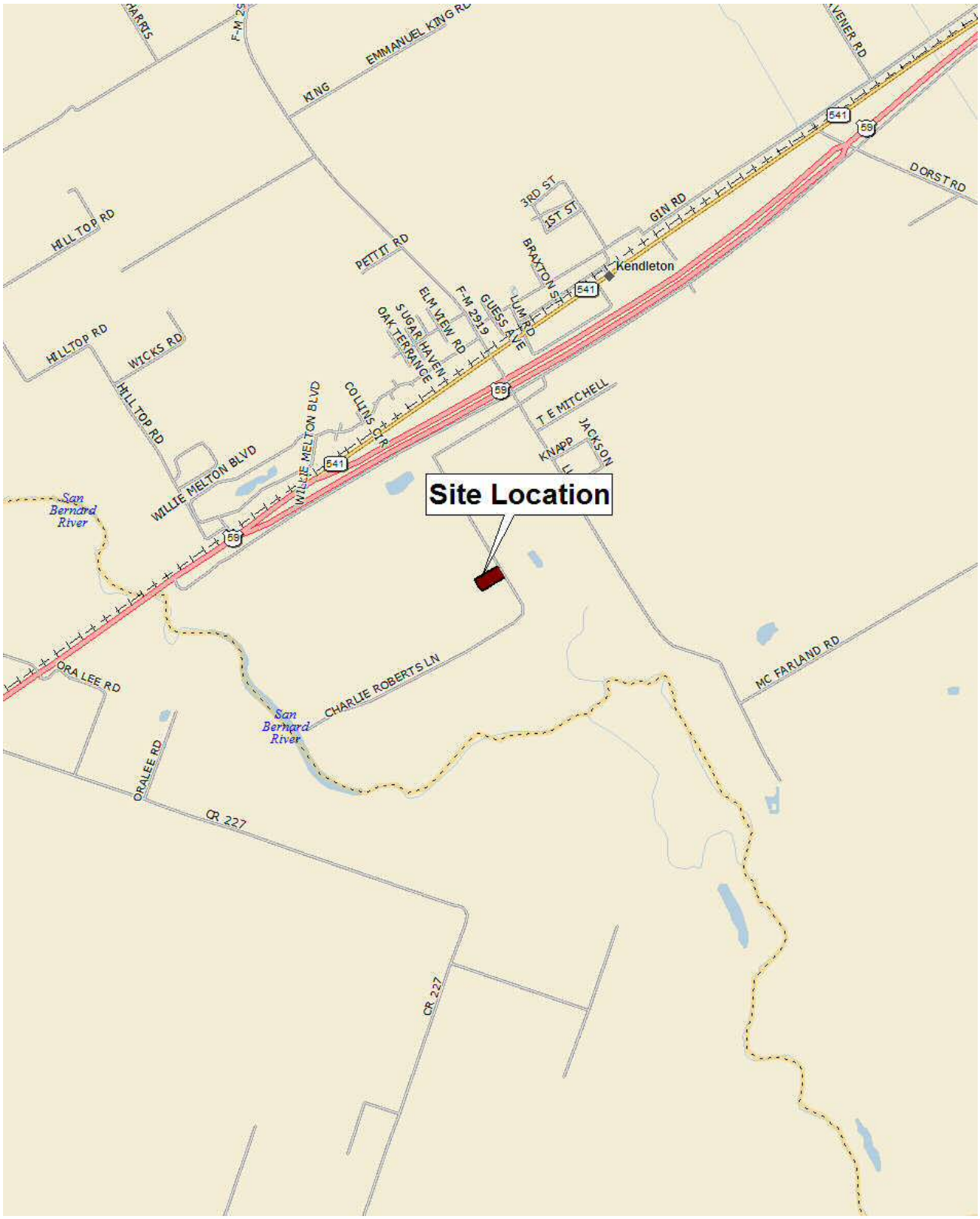

HTS, Inc. Consultants				
Proposed The Black Cowboy Museum at Bates Allen Park Kendleton, Texas				
DRAWN BY:	IAT	DATE:	09-12-22	SCALE: NTS
CHECKED BY:	JH	DATE:	09-12-22	
HTS PROJECT NO.:	**22-S-337**			FIGURE: 1
Vicinity Map				

Legend

Geotechnical Borings Included in the Study

HTS, Inc. Consultants

Proposed The Black Cowboy Museum at Bates Allen Park

Kendleton, Texas

DRAWN BY:	IAT	DATE:	09-12-22	SCALE: NTS
CHECKED BY:	JH	DATE:	09-12-22	
HTS PROJECT NO.:	22-S-337			FIGURE: 2

Boring Locations

STRAIGHT SIDED DRILLED SHAFT
ULTIMATE AXIAL CAPACITY IN COMPRESSION

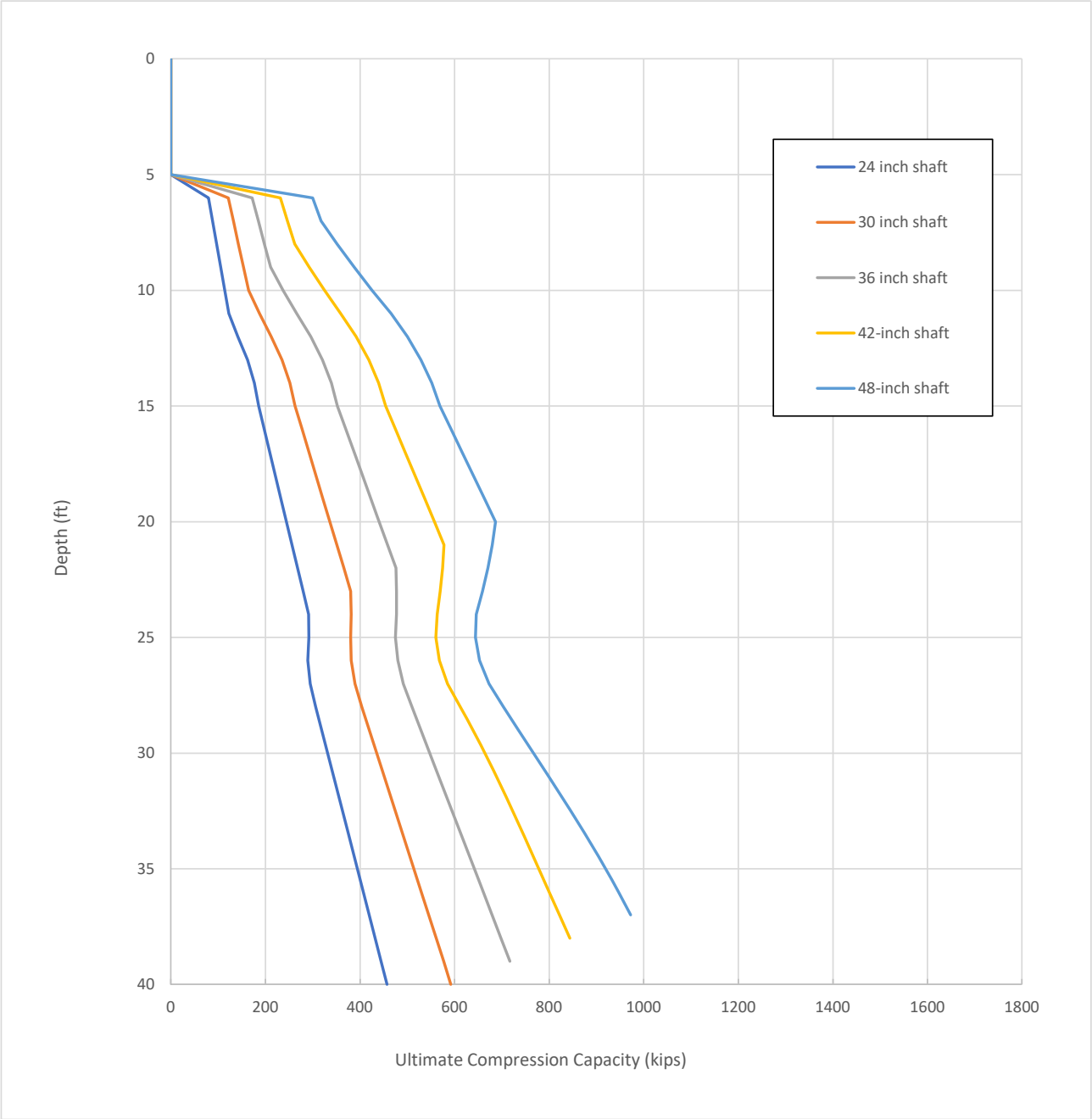

Note: 1. A Factor of Safety of 2.0 is recommended to arrive at allowable loads.
2. Pile capacity is based on existing subsurface condition.

HTS PROJECT NO. 22-S-337
PROPOSED THE BLACK COWBOY MUSEUM AT
BATES ALLEN PARK
KENDLETON, TEXAS

HTS CONSULTANTS

FIGURE 3

STRAIGHT SIDED DRILLED SHAFT
ULTIMATE AXIAL CAPACITY IN TENSION

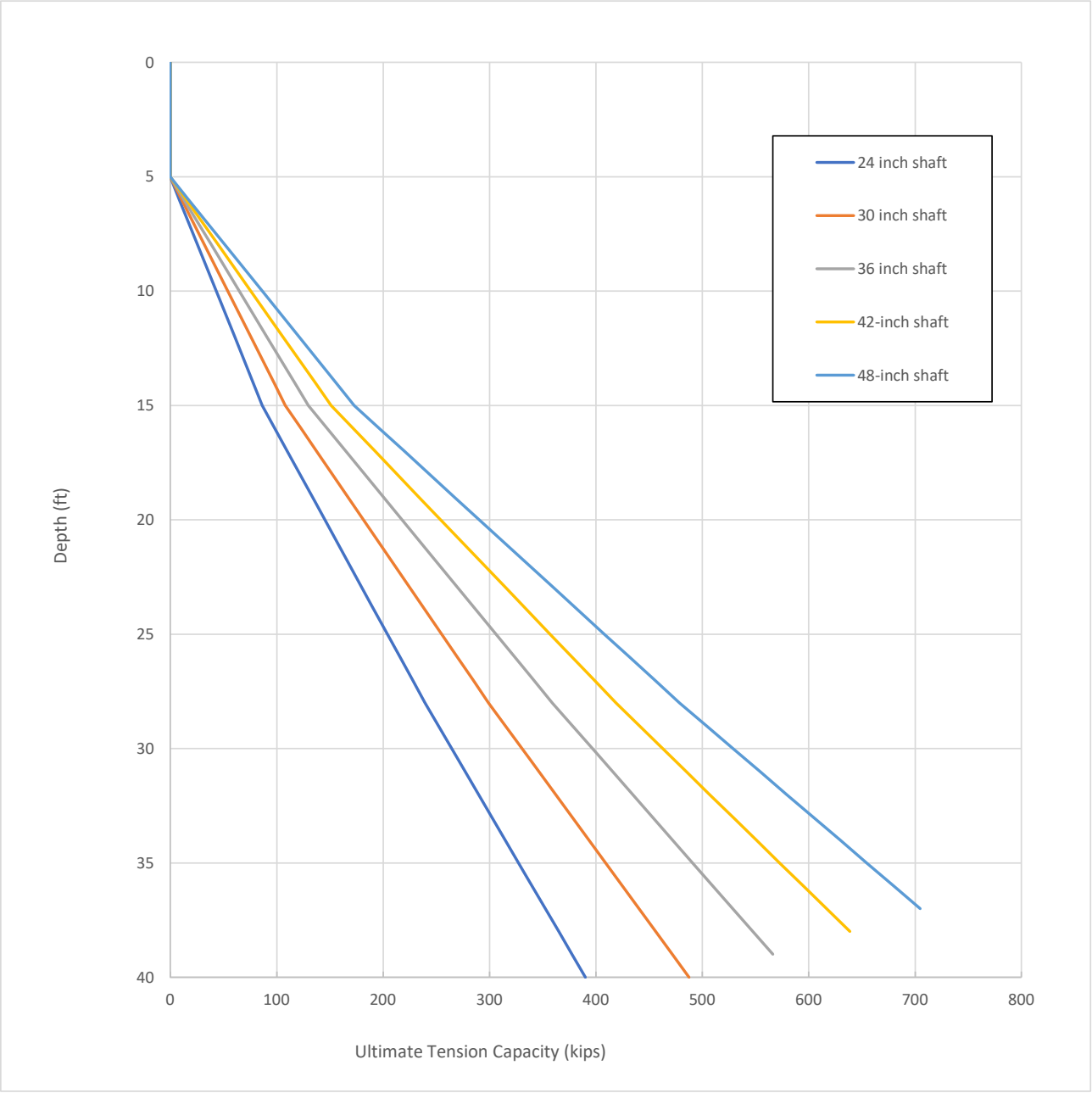

Note: 1. A Factor of Safety of 3.0 is recommended to arrive at allowable loads.
2. Adequate reinforcement should be provided for tension load.
3. Pile capacity is based on existing subsurface condition.

HTS PROJECT NO. 22-S-337
PROPOSED THE BLACK COWBOY MUSEUM AT
BATES ALLEN PARK
KENDLETON, TEXAS

HTS CONSULTANTS

FIGURE 4

APPENDIX A

BORING LOGS
(Boring Nos. 1 through 9)

TERMS AND SYMBOLS USED ON LOGS

SOIL STRUCTURE

Slickensided -------	Having planes of weakness that appear slick and glossy. The degree of slickensidedness depends upon the spacing of slickensides and the ease of breaking along these planes.
Fissures ----------	Containing shrinkage or relief cracks, often filled with fine sand or silt; usually more or less vertical.
Pocket ----------	Inclusion of material of different texture that is smaller than the diameter of the sample.
Parting ----------	Inclusion less than 1/8 inch thick extending through the sample.
Seam ----------	Inclusion 1/8 inch to 3 inches thick extending through the sample.
Layer ----------	Inclusion greater than 3 inches thick extending through the sample.
Laminated ----------	Soil sample composed of alternating partings or seams of different soil types.
Interlayered----------	Soil sample composed of alternating layers of different soil types.
Intermixed ----------	Soil sample composed of pockets of different soil types and layered or laminated structure is not evident.
Calcareous---------	Having appreciable quantities of carbonate.

SAMPLER TYPE

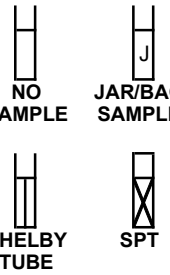

SPLIT-SPOON SAMPLER DRIVING RECORD

Blows Per Foot	
8-10-12	Number of blows for each 6-inch increment of split spoon penetration.
50/5"	Number of blows of split spoon penetration for the indicated depth of penetration in inches.

GROUNDWATER DATA

Water Level after 24 hours.

Water level during drilling.

UNIFIED SOIL CLASSIFICATION SYSTEM - ASTM D 2487

MAJOR DIVISIONS			LETTER SYMBOL	TYPICAL DESCRIPTIONS
COARSE GRAINED SOILS LESS THAN 50% PASSING NO. 200 SIEVE	GRAVEL & GRAVELY SOILS LESS THAN 50% PASSING NO. 4 SIEVE	CLEAN GRAVEL (LITTLE OR NO FINES)	GW	WELL GRADED GRAVEL, GRAVEL-SAND MIXTURES WITH LITTLE OR NO FINES
			GP	POORLY GRADED GRAVEL, GRAVEL-SAND MIXTURES WITH LITTLE OR NO FINES
		W/ APPRECIABLE FINES	GM	SILTY GRAVEL, GRAVEL-SAND-SILT MIXTURES
			GC	CLAYEY GRAVELS, GRAVEL-SAND-CLAY MIXTURES
	SANDS MORE THAN 50% PASSING NO. 4 SIEVE	CLEAN SANDS LITTLE FINES	SW	WELL GRADED SAND, GRAVELY SAND (LITTLE FINES)
			SP	POORLY GRADED SANDS, GRAVELY SAND (L.FINES)
		SANDS WITH APPRECIABLE FINES	SM	SILTY SANDS, SAND-SILT MIXTURES
			SC	CLAYEY SANDS,SAND-CLAY MIXTURES
FINE GRAINED SOILS LESS THAN 50% PASSING NO. 200 SIEVE	SILTS AND CLAYS LIQUID LIMIT LESS THAN 50		ML	INORGANIC SILTS & VERY FINE SANDS,ROCK FLOUR SILTY OR CLAYEY FINE SANDS OR CLAYEY SILT W/ LOW PI
			CL	INORGANIC CLAY OF LOW TO MEDIUM PI LEAN CLAY GRAVELY CLAYS, SANDY CLAYS, SILTY CLAYS
			OL	ORGANIC SILTS & ORGANIC SILTY CLAYS OF LOW PI
	SILTS AND CLAYS LIQUID LIMIT 50 OR GREATER		MH	INORGANIC SILTS, MICACEOUS OR DIATOMACEOUS FINE SANDY OR SILTY SOILS, ELASTIC SILTS
			CH	INORGANIC CLAYS OF HIGH PLASTICITY FAT CLAYS
			OH	ORGANIC CLAYS OF MED TO HIGH PI, ORGANIC SILT
HIGHLY ORGANIC SOIL			PT	PEAT AND OTHER HIGHLY ORGANIC SOILS
UNCLASSIFIED FILL MATERIALS			ARTIFICIALLY DEPOSITED AND OTHER UNCLASSIFIED SOILS AND MANMADE SOIL MIXTURES	

COHESIVE SOILS (1)

A) Degree of Plasticity

Degree		Plasticity Index
None	- - - - - -	0 - 4
Slight	- - - - - -	5 - 10
Medium	- - - - - -	11 - 20
High	- - - - - -	21 - 40
Very High	- - - - - -	> 40

B) Unconfined Compressive Strength

Very Soft	- - - - - -	< 0.25	tsf
Soft	- - - - - -	0.25 - 0.50	tsf
Firm	- - - - - -	0.50 - 1.00	tsf
Stiff	- - - - - -	1.00 - 2.00	tsf
Very Stiff	- - - - - -	2.00 - 4.00	tsf
Hard	- - - - - -	> 4.00	tsf

GRANULAR SOILS (1)

Density/Consistency

	SPT (bpf)
Very Loose	0 - 4
Loose	5 - 10
Medium Dense	11 - 30
Dense	31 - 50
Very Dense	> 50

bpf = blows/ft

CLASSIFICATION OF GRANULAR SOILS (2)

U.S. STANDARD SIEVE SIZE(S)

6"	3"	3/4"	No.4	No.10	No.40	No.200

BOUL--DERS	COBBLES	GRAVEL		SAND			SILT	CLAY
		COARSE	FINE	COARSE	MEDIUM	FINE		

152	76.2	19.1	4.76	2.0	0.42	0.074	0.005	0.001

GRAIN SIZE IN MM

NOTES:

The boring logs and related information depict subsurface conditions only at the specific locations and dates indicated. Soil conditions and water levels at other locations may differ from conditions occuring at these boring locations. Also the passage of time may result in a change in the conditions at these boring locations.

REFERENCES:

(1) Soil Mechanics in Engineering Practice, Terzhagi and Peck, 1967
(2) ASTM D 422

HTS CONSULTANTS

LOG OF BORING

PROJECT: Proposed The Black Cowboy Museum

BORING NO.: 1
BORING LOCATION: See Figure 2
BORING TYPE: Auger

PROJECT LOCATION: Bates Allen Park
Kendleton, Texas

HTS PROJECT NO.: 22-S-337

CLIENT: Fort Bend County Parks & Recreation

DATE: August 30, 2022

Depth (ft.)	Sample Type	Sample No.	Penetrometer Reading (tsf)	SPT Blows Per Foot	Description of Stratum
1		1	2.0		Dark brown LEAN CLAY WITH SAND (CL), stiff to very stiff w/ small roots
2			2.0		
3		2	3.0		
4					4'
5		3	4.5		Dark brown and gray LEAN CLAY (CL), hard
6					
7		4	4.5		
8					
9		5	4.5		
10					10'
11		6	4.5		Reddish brown and gray FAT CLAY WITH SAND (CH), hard w/ slickensides
12					
13					
14		7	4.5		
15					
16					
17					
18					
19	J	8			
20					
21					
22					
23					23'
24	X	9		30-37-50/5"	Light brown POORLY GRADED SAND WITH SILT (SP-SM), dense to very dense
25	X				

See page 2 of 2 for continuation of Log of Boring No. 1

LOG OF BORING

PROJECT: Proposed The Black Cowboy Museum

BORING NO.: 1
BORING LOCATION: See Figure 2
BORING TYPE: Auger

PROJECT LOCATION: Bates Allen Park
Kendleton, Texas

HTS PROJECT NO.: 22-S-337
CLIENT: Fort Bend County Parks & Recreation
DATE: August 30, 2022

Depth (ft.)	Sample Type	Sample No.	Penetrometer Reading (tsf)	SPT Blows Per Foot	Description of Stratum
26					Light brown POORLY GRADED SAND WITH SILT (SP-SM), dense to very dense (contd.)
27					
28					
29	X	10		10-19-48	
30	X	10		10-19-48	
31					
32					
33					
34	X	11		6-33	
35	X	11		6-33	
36					
37					
38					
39	X	12		28-50/4"	
40	X	12		28-50/4"	40'

Boring Terminated at 40'

Groundwater was not encountered during drilling nor after the completion of drilling operations. Cave-in occurred at 26'.

HTS CONSULTANTS

LOG OF BORING

PROJECT: Proposed The Black Cowboy Museum

BORING NO.: 2
BORING LOCATION: See Figure 2
BORING TYPE: Auger

PROJECT LOCATION: Bates Allen Park
Kendleton, Texas

HTS PROJECT NO.: 22-S-337
CLIENT: Fort Bend County Parks & Recreation
DATE: August 27, 2022

Depth (ft.)	Sample Type	Sample No.	Penetrometer Reading (tsf)	SPT Blows Per Foot	Description of Stratum
1					Gray and brown FAT CLAY WITH SAND (CH), stiff to hard w/ small roots and slickensides
2		1	2.0		- w/ ferrous nodules at 2'
3					
4		2	4.5		
5					
6		3	4.5		
7					
8		4	4.5		8'
9					Gray and brown FAT CLAY (CH), stiff to hard w/ calcareous nodules
10		5	4.5		
11					
12		6	4.5		
13					
14					
15		7	4.5		
16					
17					
18					
19					
20		8	4.5		
21					
22					
23					
24					
25		9	4.5		

See page 2 of 2 for continuation of Log of Boring No. 2

LOG OF BORING

PROJECT: Proposed The Black Cowboy Museum

BORING NO.: 2
BORING LOCATION: See Figure 2
BORING TYPE: Auger

PROJECT LOCATION: Bates Allen Park
Kendleton, Texas

HTS PROJECT NO.: 22-S-337
CLIENT: Fort Bend County Parks & Recreation
DATE: August 27, 2022

Depth (ft.)	Sample Type	Sample No.	Penetrometer Reading (tsf)	SPT Blows Per Foot	Description of Stratum
26					Gray and brown FAT CLAY (CH), stiff to hard w/ calcareous nodules (contd.)
27					
28					
29		10	4.5		
30					
31					
32					
33					33'
34	X	11		25-37-26	Reddish brown POORLY GRADED SAND WITH SILT (SP-SM), very dense
35	X				
36					
37					
38					
39	X	12		50/2"	
40	X				40'

Boring Terminated at 40'

Groundwater was not encountered during drilling nor after the completion of drilling operations.

LOG OF BORING

PROJECT: Proposed The Black Cowboy Museum

PROJECT LOCATION: Bates Allen Park
Kendleton, Texas

CLIENT: Fort Bend County Parks & Recreation

BORING NO.: 3
BORING LOCATION: See Figure 2
BORING TYPE: Auger (0 - 32')
Rotary (32' - 40')
HTS PROJECT NO.: 22-S-337
DATE: August 27, 2022

Depth (ft.)	Sample Type	Sample No.	Penetrometer Reading (tsf)	SPT Blows Per Foot	Description of Stratum
1		1	4.5		Gray and tan LEAN CLAY WITH SAND (CL), hard w/ rock fragments and ferrous nodules
2					
3		2	4.5		
4					-w/ calcareous nodules at 4'
5		3	4.5		
6					
7		4	4.5		
8					
9		5	4.5		
10					
11		6	4.5		
12					
13					13'
14		7	4.5		Light gray and brown LEAN CLAY (CL), hard
15					
16					
17					
18					
19		8	4.5		
20					20'
21					Light gray and brown FAT CLAY (CH), very stiff to hard
22					
23					
24		9	4.5		
25					

See page 2 of 2 for continuation of Log of Boring No. 3

HTS CONSULTANTS

LOG OF BORING

PROJECT: Proposed The Black Cowboy Museum

PROJECT LOCATION: Bates Allen Park
Kendleton, Texas

CLIENT: Fort Bend County Parks & Recreation

BORING NO.: 3
BORING LOCATION: See Figure 2
BORING TYPE: Auger (0 - 32')
Rotary (32' - 40')
HTS PROJECT NO.: 22-S-337
DATE: August 27, 2022

Depth (ft.)	Sample Type	Sample No.	Penetrometer Reading (tsf)	SPT Blows Per Foot	Description of Stratum
26					Light gray and brown FAT CLAY (CH), very stiff to hard (contd.)
27					
28					
29		10	4.5		
30					
31					
32					▼ 32'
33					33' ▽ 32.8'
34	X	11		19-19-50/5"	Tan POORLY GRADED SAND WITH SILT (SP-SM), very dense
35	X				
36					
37					
38					
39	X	12		35-50/3"	
40	X				40'

Boring Terminated at 40'

Groundwater was encountered at a depth of 32.8' during drilling. Approximately 15 minutes after groundwater was initially encountered, the water level was measured at a depth of 32' below the exisiting ground surface.

LOG OF BORING

PROJECT: Proposed The Black Cowboy Museum

PROJECT LOCATION: Bates Allen Park
Kendleton, Texas

CLIENT: Fort Bend County Parks & Recreation

BORING NO.: 4
BORING LOCATION: See Figure 2
BORING TYPE: Auger (0 - 32')
Rotary (32'-40')
HTS PROJECT NO.: 22-S-337
DATE: August 27, 2022

Depth (ft.)	Sample Type	Sample No.	Penetrometer Reading (tsf)	SPT Blows Per Foot	Description of Stratum
1		1	1.25		Gray and brown LEAN CLAY WITH SAND (CL), stiff to hard
2					- w/ ferrous nodules and calcareous nodules at 2'
3		2	4.5		
4					
5		3	4.5		
6					6'
7		4	4.5		Brown and light gray FAT CLAY (CH), hard
8					
9		5	4.5		
10					
11		6	4.5		
12					
13					13'
14		7	4.5		Light gray and tan LEAN CLAY WITH SAND (CL), hard
15					
16					
17					
18					
19		8	4.5		
20					
21					
22					
23					23'
24		9	4.5		Light gray and brown FAT CLAY (CH), stiff to hard
25					

See page 2 of 2 for continuation of Log of Boring No. 4

HTS CONSULTANTS

LOG OF BORING

PROJECT: Proposed The Black Cowboy Museum

PROJECT LOCATION: Bates Allen Park
Kendleton, Texas

CLIENT: Fort Bend County Parks & Recreation

BORING NO.: 4
BORING LOCATION: See Figure 2
BORING TYPE: Auger (0 - 32')
Rotary (32'-40')
HTS PROJECT NO.: 22-S-337
DATE: August 27, 2022

Depth (ft.)	Sample Type	Sample No.	Penetrometer Reading (tsf)	SPT Blows Per Foot	Description of Stratum
26					Light gray and brown FAT CLAY (CH), hard (contd.)
27					
28					28'
29	X	10		23-33-35	Tan SILTY SAND (SM), medium dense to very dense
30	X				
31					
32					
33					▼ 32.5'
34	X	11		5-23-50/5"	
35	X				
36					
37					
38					
39	X	12		8-12-25	
40	X				40'

Boring Terminated at 40'

Groundwater was encountered at a depth of 32.5' during drilling.

LOG OF BORING

PROJECT: Proposed The Black Cowboy Museum

PROJECT LOCATION: Bates Allen Park
Kendleton, Texas

CLIENT: Fort Bend County Parks & Recreation

BORING NO.: 5
BORING LOCATION: See Figure 2
BORING TYPE: Auger (0 - 35')
Rotary (35' - 40')
HTS PROJECT NO.: 22-S-337
DATE: August 27, 2022

Depth (ft.)	Sample Type	Sample No.	Penetrometer Reading (tsf)	SPT Blows Per Foot	Description of Stratum
1		1	1.0		Gray and tan FAT CLAY WITH SAND (CH), firm to hard
2					
3		2	4.5		
4					
5		3	4.5		
6					- w/ ferrous nodules and calcareous nodules at 6'
7		4	4.5		
8					
9		5	4.5		
10					
11		6	4.5		
12					
13					
14		7	4.5		
15					
16					
17					
18					18'
19		8	4.5		Brown and light gray FAT CLAY (CH), very stiff to hard w/ slickensides
20					
21					
22					
23					
24		9	4.5		
25					

See page 2 of 2 for continuation of Log of Boring No. 5

HTS CONSULTANTS

LOG OF BORING

PROJECT: Proposed The Black Cowboy Museum

PROJECT LOCATION: Bates Allen Park
Kendleton, Texas

CLIENT: Fort Bend County Parks & Recreation

BORING NO.: 5
BORING LOCATION: See Figure 2
BORING TYPE: Auger (0 - 35')
Rotary (35' - 40')
HTS PROJECT NO.: 22-S-337
DATE: August 27, 2022

Depth (ft.)	Sample Type	Sample No.	Penetrometer Reading (tsf)	SPT Blows Per Foot	Description of Stratum
26					Brown and light gray FAT CLAY (CH), very stiff to hard w/ slickensides (contd.)
27					
28					
29		10	4.5		
30					
31					
32					▽ 31.8' ▼ 32'
33					33'
34		11		8-22-50/4"	Light gray POORLY GRADED SAND WITH SILT (SP-SM), medium dense to very dense
35					
36					
37					
38					
39		12		11-18-13	
40					40'

Boring Terminated at 40'

Groundwater was encountered at a depth of 32' during drilling. Approximately 15 minutes after groundwater was initially encountered, the water level was measured at a depth of 31.8' below the exisiting ground surface.

LOG OF BORING

PROJECT: Proposed The Black Cowboy Museum

BORING NO.: 6
BORING LOCATION: See Figure 2
BORING TYPE: Auger

PROJECT LOCATION: Bates Allen Park
Kendleton, Texas

HTS PROJECT NO.: 22-S-337

CLIENT: Fort Bend County Parks & Recreation

DATE: August 30, 2022

Depth (ft.)	Sample Type	Sample No.	Penetrometer Reading (tsf)	SPT Blows Per Foot	Description of Stratum
1		1	1.0		Gray and brown FAT CLAY WITH SAND (CH), firm to stiff
2		2	1.5		
3					- w/ ferrous nodules and calcareous nodules at 3'
4		3	2.0		
5					5'
					Boring Terminated at 5'

Groundwater was not encountered during drilling nor after the completion of drilling operations.

LOG OF BORING

PROJECT: Proposed The Black Cowboy Museum

BORING NO.: 7
BORING LOCATION: See Figure 2
BORING TYPE: Auger

PROJECT LOCATION: Bates Allen Park
Kendleton, Texas

HTS PROJECT NO.: 22-S-337

CLIENT: Fort Bend County Parks & Recreation

DATE: August 30, 2022

Depth (ft.)	Sample Type	Sample No.	Penetrometer Reading (tsf)	SPT Blows Per Foot	Description of Stratum
1		1	1.5		Gray and light brown FAT CLAY (CH), stiff to hard
2		2	4.5		
3					
4		3	4.5		- w/ calcareous nodules at 4'
5					5'
					Boring Terminated at 5'

Groundwater was not encountered during drilling nor after the completion of drilling operations.

LOG OF BORING

PROJECT: Proposed The Black Cowboy Museum

BORING NO.: 8
BORING LOCATION: See Figure 2
BORING TYPE: Auger

PROJECT LOCATION: Bates Allen Park
Kendleton, Texas

HTS PROJECT NO.: 22-S-337

CLIENT: Fort Bend County Parks & Recreation

DATE: August 30, 2022

Depth (ft.)	Sample Type	Sample No.	Penetrometer Reading (tsf)	SPT Blows Per Foot	Description of Stratum
1		1	2.5		Dark brown and brown FAT CLAY WITH SAND (CH), very stiff to hard w/ small roots
2					
3		2	4.5		
4					
5		3	4.5		5'
					Boring Terminated at 5'

Groundwater was not encountered during drilling nor after the completion of drilling operations.

LOG OF BORING

PROJECT: Proposed The Black Cowboy Museum

PROJECT LOCATION: Bates Allen Park
Kendleton, Texas

CLIENT: Fort Bend County Parks & Recreation

BORING NO.: 9
BORING LOCATION: See Figure 2
BORING TYPE: Auger
Rotary
HTS PROJECT NO.: 22-S-337
DATE: August 30, 2022

Depth (ft.)	Sample Type	Sample No.	Penetrometer Reading (tsf)	SPT Blows Per Foot	Description of Stratum
1		1	2.5		Brown FAT CLAY (CH), very sttiff to hard
2					
3		2	4.5		
4					- w/ calcareous nodules at 4'
5		3	4.5		5'
					Boring Terminated at 5'

Groundwater was not encountered during drilling nor after the completion of drilling operations.

SECTION 011000 - SUMMARY

PART 1 - GENERAL

1.1 RELATED DOCUMENTS

A. Drawings and general provisions of the Contract, including General and Supplementary Conditions and other Division 01 Specification Sections, apply to this Section.

1.2 SUMMARY

A. Section Includes:

1. Project information.
2. Work covered by Contract Documents.
3. Work performed by Owner.
4. Owner-furnished products.
5. Contractor's use of site and premises.
6. Specification and Drawing conventions.
7. Miscellaneous provisions.

1.3 PROJECT INFORMATION

A. Project Identification: Bates Allen Park Black Cowboy Museum.

1. Project Location: 630 Charlie Roberts Lane, Kendleton, Texas 77451.

B. Owner: Fort Bend County, 301 Jackson Street, Richmond, TX 77469.

C. Architect: VCS Architects, 19251 Purus Dr., Porter, TX 77365.

D. Architect's Consultants: Architect has retained the following design professionals, who have prepared designated portions of the Contract Documents:

1. Civil Engineer: WECS Engineers.

2. Structural Engineer: Garza + McLain

3. MEP Engineer: Source2Load Engineering and Consulting

4. Interior Designer: Shundra Harris Interiors

E. Other Owner Consultants: Owner has retained the following design professionals who have prepared designated portions of the Contract Documents:

1. Geotechnical Engineer:

1.4 WORK COVERED BY CONTRACT DOCUMENTS

A. The Work of Project is defined by the Contract Documents and includes, but is not limited to, the following:

1. Project consists of a 2 story, 7,000 square foot composite steel framed museum of Type II-B construction per IBC. Project also consists of other Work indicated in the Contract Documents.

B. Type of Contract:

1. Project will be constructed under a single prime contract.

1.5 WORK PERFORMED BY OWNER

A. General: Cooperate fully with Owner, so work may be carried out smoothly, without interfering with or delaying Work under this Contract or work by Owner. Coordinate the Work of this Contract with work performed by Owner.

1.6 OWNER-FURNISHED PRODUCTS

A. Owner will furnish products indicated. The work includes receiving, unloading, handling, storing, protecting, and installing Owner-furnished products.

B. Owner-Furnished Products

1. N/A

1.7 CONTRACTOR'S USE OF SITE AND PREMISES

A. Unrestricted Use of Site: Contractor shall have full use of Project site for construction operations during construction period. Contractor's use of Project site is limited only by Owner's right to perform work or to retain other contractors on portions of Project.

1.8 WORK RESTRICTIONS

A. Comply with restrictions on construction operations.

1. Comply with limitations on use of public streets, work on public streets, rights of way, and other requirements of authorities having jurisdiction.

B. On-Site Work Hours: Limit work to normal business working hours of 7:00 a.m. to 5:00 p.m., Monday through Friday, unless otherwise indicated. Work hours may be modified to meet Project requirements if approved by Owner and authorities having jurisdiction.
1. Early Morning Hours: Refer to Local Municipal Noise Ordinance.

C. Existing Utility Interruptions: Do not interrupt utilities serving facilities occupied by Owner or others unless permitted under the following conditions and then only after arranging for temporary utility services according to requirements indicated:

1. Notify Owner not less than 7 days in advance of proposed utility interruptions.
2. Obtain Owner’s written permission before proceeding with utility interruptions.

D. Noise, Vibration, Dust, and Odors: Coordinate operations that may result in high levels of noise and vibration, dust, odors, or other disruption to Owner occupancy with Owner.

1. Notify Owner not less than 5 days in advance of proposed disruptive operations.
2. Obtain Owner’s written permission before proceeding with disruptive operations.

E. Smoking and Controlled Substance Restrictions: Use of tobacco products, alcoholic beverages, and other controlled substances on Project site is not permitted.

F. Employee Screening: Comply with Owner's requirements for drug and background screening of Contractor personnel working on Project site.

1. Maintain list of approved screened personnel with Owner's representative.

1.9 SPECIFICATION AND DRAWING CONVENTIONS

A. Specification Content: The Specifications use certain conventions for the style of language and the intended meaning of certain terms, words, and phrases when used in particular situations. These conventions are as follows:

1. Imperative mood and streamlined language are generally used in the Specifications. The words "shall," "shall be," or "shall comply with," depending on the context, are implied where a colon (:) is used within a sentence or phrase.
2. Specification requirements are to be performed by Contractor unless specifically stated otherwise.

B. Division 00 Contracting Requirements: General provisions of the Contract, including General and Supplementary Conditions, apply to all Sections of the Specifications.

C. Division 01 General Requirements: Requirements of Sections in Division 01 apply to the Work of all Sections in the Specifications.

D. Drawing Coordination: Requirements for materials and products identified on Drawings are described in detail in the Specifications. One or more of the following are used on Drawings to identify materials and products:

1. Terminology: Materials and products are identified by the typical generic terms used in the individual Specifications Sections.
2. Abbreviations: Materials and products are identified by abbreviations scheduled on Drawings and published as part of the U.S. National CAD Standard.
3. Keynoting: Materials and products are identified by reference keynotes referencing Specification Section numbers found in this Project Manual.

PART 2 - PRODUCTS (Not Used)

PART 3 - EXECUTION (Not Used)

END OF SECTION 011000

SECTION 012000 - PRICE AND PAYMENT PROCEDURES

PART 1 - GENERAL

1.1 ALLOWANCES

A. Advise Architect of the date when selection and purchase of each product or system described by an allowance must be completed to avoid delaying the Work.

B. At Architect's request, obtain proposals for each allowance for use in making final selections. Include recommendations that are relevant to performing the Work.

C. Purchase products and systems selected by Architect from the designated supplier.

D. Submit invoices or delivery slips to show actual quantities of materials delivered to the site for use in fulfillment of each allowance.

E. Allowance shall include cost to Contractor of specific products and materials ordered by Owner or selected by Architect under allowance and shall include [**taxes,**]freight and delivery to Project site.

F. Unless otherwise indicated, Contractor's costs for receiving and handling at Project site, labor, installation, overhead and profit, and similar costs related to products and materials under allowance shall be included as part of the Contract Sum and not part of the allowance.

1.2 UNIT PRICES

A. Unit price is **an amount incorporated in the Agreement, applicable during the duration of the Work as** a price per unit of measurement for materials, equipment, or services, or a portion of the Work, added to or deducted from the Contract Sum by appropriate modification, if the scope of Work or estimated quantities of Work required by the Contract Documents are increased or decreased.

B. Unit prices include all necessary material, plus cost for delivery, installation, insurance, **applicable taxes,** overhead, and profit.

C. Measurement and Payment: See individual Specification Sections for work that requires establishment of unit prices. Methods of measurement and payment for unit prices are specified in those Sections.

1.3 ALTERNATES

A. Alternate: An amount proposed by bidders and stated on the Bid Form for certain work defined in the bidding requirements that may be added to or deducted from the Base Bid amount if Owner decides to accept a corresponding change either in the amount of construction to be

completed or in the products, materials, equipment, systems, or installation methods described in the Contract Documents.

1. Alternates described in this Section are part of the Work only if enumerated in the Agreement.
2. The cost or credit for each alternate is the net addition to or deduction from the Contract Sum to incorporate alternate into the Work. No other adjustments are made to the Contract Sum.

B. Coordination: Revise or adjust affected adjacent work as necessary to completely integrate work of the alternate into Project.

1. Include as part of each alternate, miscellaneous devices, accessory objects, and similar items incidental to or required for a complete installation whether or not indicated as part of alternate.

C. Notification: Immediately following award of the Contract, notify each party involved, in writing, whether alternates have been accepted, rejected, or deferred for later consideration.

1.4 PAYMENT PROCEDURES

A. Submit a Schedule of Values at least ten (10) days before the initial Application for Payment. Break down the Contract Sum into at least one line item for each Specification Section in the Project Manual table of contents. Coordinate the schedule of values with Contractor's construction schedule.

1. Arrange schedule of values consistent with format of **AIA Document G703**
2. Round amounts to nearest whole dollar; total shall equal the Contract Sum.
3. Provide a separate line item in the schedule of values for each part of the Work where Applications for Payment may include materials or equipment purchased or fabricated and stored, but not yet installed.
4. Provide separate line items in the schedule of values for initial cost of materials and for total installed value of that part of the Work.
5. Provide a separate line item in the schedule of values for each allowance.

B. Application for Payment Forms: Use **AIA Document G702 and AIA Document G703** as form for Applications for Payment.

C. Submit [**4**] four copies of each application for payment according to the schedule established in Owner/Contractor Agreement.

1. Notarize and execute by a person authorized to sign legal documents on behalf of Contractor.
2. With each Application for Payment, submit waivers of mechanic's liens from subcontractors, sub-subcontractors, and suppliers for construction period covered by the previous application.

3. Submit final Application for Payment with or preceded by conditional final waivers from every entity involved with performance of the Work covered by the application who is lawfully entitled to a lien.

    a. Include insurance certificates, proof that taxes, fees, and similar obligations were paid, and evidence that claims have been settled.
    b. Include affidavit of payment of debts and claims **on AIA Document G706**.
    c. Include affidavit of release of liens **on AIA Document G706A**].
    d. Include consent of surety to final payment **on AIA Document G707**.
    e. Submit final meter readings for utilities, a record of stored fuel, and similar data as of the date of Substantial Completion or when Owner took possession of and assumed responsibility for corresponding elements of the Work.

PART 2 - PRODUCTS (Not Used)

PART 3 - EXECUTION

3.1 SCHEDULE OF ALLOWANCES

A. Allow the sum of $200,000.00 for the Owner's Contingency.

3.2 SCHEDULE OF UNIT PRICES

A. This is not a Unit Price Contract.

1. Quantity Allowance: Not applicable.

3.3 SCHEDULE OF ALTERNATES

A. Alternate No. 01: N/A.

END OF SECTION 012000

SECTION 012500 - SUBSTITUTION PROCEDURES

PART 1 - GENERAL

1.1 SUBSTITUTION PROCEDURES

A. Substitutions include changes in products, materials, equipment, and methods of construction from those required by the Contract Documents and proposed by Contractor.

B. Substitution Requests: Submit three copies of each request for consideration. Identify product or fabrication or installation method to be replaced. Include Specification Section number and title and Drawing numbers and titles.

1. Substitution Request Form: Use **CSI Form 13.1A**.
2. Submit requests within **14 Calendar**>days after **the Notice to Proceed**.
3. Identify product to be replaced and show compliance with requirements for substitutions. Include a detailed comparison of significant qualities of proposed substitution with those of the Work specified, a list of changes needed to other parts of the Work required to accommodate proposed substitution, and any proposed changes in the Contract Sum or the Contract Time should the substitution be accepted.

C. Architect will review proposed substitutions and notify Contractor of their acceptance or rejection. If necessary, Architect will request additional information or documentation for evaluation.

1. Architect will notify Contractor of acceptance or rejection of proposed substitution within [**15**] fifeteen days of receipt of request, or **seven** (7) days of receipt of additional information or documentation, whichever is later.

D. Do not submit unapproved substitutions on Shop Drawings or other submittals.

PART 2 - PRODUCTS (Not Used)

PART 3 - EXECUTION (Not Used)

END OF SECTION 012500

SECTION 012600 - CONTRACT MODIFICATION PROCEDURES

PART 1 - GENERAL

1.1 CONTRACT MODIFICATION PROCEDURES

A. Architect will issue supplemental instructions authorizing minor changes in the Work, not involving adjustment to the Contract Sum or the Contract Time**.**

B. Owner-Initiated Proposal Requests: Architect will issue a detailed description of proposed changes in the Work.

1. Proposal Requests are not instructions either to stop work in progress or to execute the proposed change.
2. Within **15 calendar days or less, when not otherwise specified,** after receipt of Proposal Request, submit a quotation estimating cost adjustments to the Contract Sum and the Contract Time.

C. Contractor-Initiated Proposals: If latent or changed conditions require modifications to the Contract, Contractor may initiate a claim by submitting a request for a change to Architect.

D. On Owner's approval of a Proposal Request, Architect will issue a CPR Approval for signatures of Owner and Contractor. All changes to the Contract Sum or the Contract Time will be issued at the end of the project **on one AIA Document G701**, for signatures of Architect, Owner and General Contractor.

E. Architect may issue a Construction Change Directive[**on AIA Document G714**]. Construction Change Directive instructs Contractor to proceed with a change in the Work, for subsequent inclusion in a Change Order.

1. Construction Change Directive contains a complete description of change in the Work. It also designates method to be followed to determine change in the Contract Sum or the Contract Time.

F. Documentation: Maintain detailed records on a time and material basis of work required by the Construction Change Directive. After completion of change, submit an itemized account and supporting data necessary to substantiate cost and time adjustments to the Contract.

PART 2 - PRODUCTS (Not Used)

PART 3 - EXECUTION (Not Used)

END OF SECTION 012600

SECTION 013000 - ADMINISTRATIVE REQUIREMENTS

PART 1 - GENERAL

1.1 PROJECT MANAGEMENT AND COORDINATION

A. Subcontract List: Submit a written summary identifying individuals or firms proposed for each portion of the Work. **Use CSI Form 1.5A.**

B. Key Personnel Names: Within **15** calendar days of starting construction operations, submit a list of key personnel assignments, including superintendent and other personnel in attendance at Project site. List e-mail addresses and telephone numbers.

C. Coordinate construction operations included in different Sections of the Specifications to ensure efficient and orderly installation of each part of the Work.

D. Requests for Information (RFIs): On discovery of the need for additional information or interpretation of the Contract Documents, Contractor shall prepare and submit an RFI. Use **forms acceptable to Architect and Owner**.

E. Project Web Site: Provide, administer, and use Project Web site for purposes of hosting and managing project communication and documentation until Final Completion.

1. Provide up to **five** Project Web site user licenses for use of the Owner, Architect, and Architect's consultants.
2. Contractor, subcontractors, and other parties granted access by Contractor to Project Web site shall execute a data licensing agreement in the form of **AIA Document C106**.

F. Provide bi-weekly project progress photographs, minimum 4 view angle.

G. Schedule and conduct progress meetings at Project site at **regular** intervals. Notify Owner and Architect of meeting dates and times. Require attendance of each subcontractor or other entity concerned with current progress or involved in planning, coordination, or performance of future activities.

Record minutes and distribute to everyone concerned, including Owner and Architect.

H. Attend public meetings and hearings concerning the project progress and schedule of the Project, if requested by owner.

1.2 SUBMITTAL ADMINISTRATIVE REQUIREMENTS

A. Architect's Digital Data Files: Electronic digital data files of the Contract Drawings will be provided by Architect for Contractor's use in preparing submittals, for a $250.00 usage fee.

1. Architect will furnish Contractor one set of digital data drawing files of the Contract Drawings for use in preparing Shop Drawings **and Project record drawings**.

    a. Architect makes no representations as to the accuracy or completeness of digital data drawing files as they relate to the Contract Drawings.
    b. Contractor shall execute a data licensing agreement in the form of **AIA Document C106.**

B. Coordinate each submittal with fabrication, purchasing, testing, delivery, other submittals, and related activities that require sequential activity.

1. No extension of the Contract Time will be authorized because of failure to transmit submittals enough in advance of the Work to permit processing, including resubmittals
2. Architect will **discard submittals** received from sources other than Contractor.
3. Contractor to review and stamp each submittal, with name of reviewer, date and any questions or concerns to be addressed by architect or engineer.

C. Electronic Submittals: Identify and incorporate information in each electronic submittal file as follows:

1. Assemble complete submittal package into a single indexed file incorporating submittal requirements of a single Specification Section and transmittal form with links enabling navigation to each item.
2. Name file with unique identifier, including project identifier, Specification Section number, and revision identifier.
3. Provide means for insertion to permanently record Contractor's review and approval markings and action taken by Architect.

D. Identify options requiring selection by Architect.

E. Identify deviations from the Contract Documents on submittals.

F. Contractor's Construction Schedule Submittal Procedure:

1. Submit required submittals in the following format:

    a. Working electronic copy of schedule file, where indicated.
    b. PDF electronic file.

2. Contractor's Construction Schedule: Initial schedule, of size required to display entire schedule for entire construction period.

    a. Submit a working electronic copy of schedule, using software indicated, and labeled to comply with requirements for submittals. Include type of schedule (initial or updated) and date on label.

3. Coordinate Contractor's construction schedule with the schedule of values, **submittal schedule,** progress reports, payment requests, and other required schedules and reports.

PART 2 - PRODUCTS

2.1 SUBMITTAL PROCEDURES

A. General Submittal Procedure Requirements: Prepare and submit submittals required by individual Specification Sections.

1. Submit electronic submittals via email as PDF electronic files.

a. Architect will return annotated file. Annotate and retain one copy of file as an electronic Project record document file.

2.2 ACTION SUBMITTALS

A. Product Data: Mark each copy to show applicable products and options. Include the following:

1. Manufacturer's written recommendations, product specifications, and installation instructions.
2. Wiring diagrams showing factory-installed wiring.
3. Printed performance curves and operational range diagrams.
4. Testing by recognized testing agency.
5. Compliance with specified standards and requirements.

B. Shop Drawings: Prepare Project-specific information, drawn accurately to scale. Do not base Shop Drawings on reproductions of the Contract Documents or standard printed data. Submit on sheets at least 8-1/2 by 11 inches (215 by 280 mm) but no larger than 30 by 42 inches (762 by 1067 mm). Include the following:

1. Dimensions and identification of products.
2. Fabrication and installation drawings and roughing-in and setting diagrams.
3. Wiring diagrams showing field-installed wiring.
4. Notation of coordination requirements.
5. Notation of dimensions established by field measurement.

C. Samples: Submit Samples for review of kind, color, pattern, and texture and for a comparison of these characteristics between submittal and actual component as delivered and installed. Include name of manufacturer and product name on label.

1. If variation is inherent in material or product, submit at least **three** sets of paired units that show variations.

2.3 INFORMATIONAL SUBMITTALS

A. Informational Submittals: Submit **two** paper copies of each submittal unless otherwise indicated. Architect will not return copies.

B. Qualification Data: Include lists of completed projects with project names and addresses, names and addresses of architects and owners, and other information specified.

C. Product Certificates: Prepare written statements on manufacturer's letterhead certifying that product complies with requirements in the Contract Documents.

2.4 DELEGATED DESIGN SERVICES

A. Performance and Design Criteria: Where professional design services or certifications by a design professional are specifically required of Contractor by the Contract Documents, provide products and systems complying with specific performance and design criteria indicated.

1. If criteria indicated are not sufficient to perform services or certification required, submit a written request for additional information to Architect.

B. Delegated-Design Submittal: In addition to Shop Drawings, Product Data, and other required submittals, submit **three** copies of a statement, signed and sealed by the responsible design professional, for each product and system specifically assigned to Contractor to be designed or certified by a design professional.

1. Indicate that products and systems comply with performance and design criteria in the Contract Documents. Include list of codes, loads, and other factors used in performing these services.

2.5 CONTRACTOR'S CONSTRUCTION SCHEDULE

A. Gantt-Chart Schedule: Submit a comprehensive, fully developed, horizontal Gantt-chart-type schedule within **15 calendar** days of date established for **the Notice to Proceed .**

B. Preparation: Indicate each significant construction activity separately. Identify first workday of each week with a continuous vertical line.

C. Cost Correlation: Superimpose a cost correlation timeline, indicating planned and actual costs. On the line, show planned and actual dollar volume of the Work performed as of planned and actual dates used for preparation of payment requests.

D. Recovery Schedule: When periodic update indicates the Work is **14** or more calendar days behind the current approved schedule, submit a separate recovery schedule indicating means by which Contractor intends to regain compliance with the schedule. Indicate changes to working hours, working days, crew sizes, and equipment required to achieve compliance, and indicate date by which recovery will be accomplished.

PART 3 - EXECUTION

3.1 SUBMITTAL REVIEW

A. Review each submittal and check for coordination with other Work of the Contract and for compliance with the Contract Documents. Note corrections and field dimensions. Mark with approval stamp before submitting to Architect.

B. Architect will review each action submittal, make marks to indicate corrections or modifications required, will stamp each submittal with an action stamp, and will mark stamp appropriately to indicate action.

C. Informational Submittals: Architect will review each submittal and will not return it, or will return it if it does not comply with requirements. Architect will forward each submittal to appropriate party.

D. Submittals not required by the Contract Documents may not be reviewed and may be discarded.

3.2 CONTRACTOR'S CONSTRUCTION SCHEDULE

A. Updating: At **monthly** intervals, update schedule to reflect actual construction progress and activities. Issue schedule **one week** before each regularly scheduled progress meeting.

1. As the Work progresses, indicate Actual Completion percentage for each activity.

B. Distribute copies of approved schedule to Owner, Architect, subcontractors, testing and inspecting agencies, and parties identified by Contractor with a need-to-know schedule responsibility. When revisions are made, distribute updated schedules to the same parties.

END OF SECTION 013000

SECTION 01 32 23 SURVEY AND LAYOUT DATA

PART 1 - GENERAL

1.1 QUALITY CONTROL

A. Conform to State of Texas laws for Surveyors requiring licensed surveyors. Employ a surveyor acceptable to the Owner's Representative if required by the Contract

1.2 SUBMITTALS

A. Conform to requirements of Division 1

B. Submit name, address, and telephone number of Surveyor to Owner's Representative before starting survey work.

C. Submit documentation verifying accuracy of survey work on request.

D. Submit certificates signed by Surveyor, that elevations and locations of the Work area are in conformance with the Contract Documents.

1.3 PROJECT RECORD DOCUMENTS

A. Maintain a complete and accurate log of control and survey work as it progresses.

B Prepare a certified survey setting forth dimensions, locations, angles, and elevations of construction and site work upon completion of foundation, walls and major site improvements.

C. Submit record documents under provisions of Division 1.

1.4 EXAMINATION

A. Verify locations of survey control points prior to starting the Work.

B. Notify Owner's Representative immediately if any discrepancies are discovered.

1.5 SURVEY REFERENCE POINTS

A. The Owner will establish survey control datum as indicated on Drawings. Inform Owner's Representative in advance of time and vertical control points will be established so verification deemed necessary by Owner's Representative may be done with minimum inconvenience to the Owner or Contractor.

B. Locate and protect survey control points prior to starting site work; preserve permanent reference points during construction.

C. Notify Owner's Representative a minimum of 48 hours before relocation of reference points is needed due to changes in grades or other reasons.

D. Promptly report loss of destruction of reference points to Owner's Representative.

E. Reimburse the Owner for costs of reestablishment of permanent reference points disturbed by construction operations.

1.6 SURVEY REQUIREMENTS

A. Utilize recognized engineering survey practices.

B. Establish a minimum of two permanent benchmarks on site, referenced to established control points. Record horizontal and vertical location data on Project record documents.

C. Establish elevations, lines and levels to provide quantities required for measurement and payment and for appropriated controls for the Work. Locate and lay out the following with appropriate instruments.

1. Site improvements including grading, fill and topsoil placement, utilities, and footings and slabs.

2. Grid or axis for structures.

3. Building foundations, column locations, ground floor elevations and sports fields.

PART 2 - PRODUCTS – Not Used

PART 3 - EXECUTION – Not Used

END OF SECTION 01 32 23

SECTION 01 33 00 SUBMITTAL PROCEDURES

PART 1 - GENERAL

1.01 RELATED DOCUMENTS

A. Drawings and general provisions of contract, including General and Supple mentary Conditions and other Division 1 Specification sections, apply to work of this section.

1.02 DESCRIPTION OF REQUIREMENTS

A. The types of submittal requirements specified in this section include shop drawings, product data, samples and miscellaneous work-related submittals. Individual submittal requirements are specified in applicable sections for each unit of work.

1.03 DEFINITIONS

A. Work-related submittals of this section are categorized for convenience as follows:

1) Shop Drawings include specially prepared technical data for this project including drawings, diagrams, performance curves, data sheets, schedules, templates, patterns, reports, calculations, instructions, measurements, and similar information not in standard printed form for general application to a range of similar projects.

2) Product Data includes standard printed information on materials, products, and systems not specifically prepared for this project other than the designation of selections from among available choices printed therein.

3) Samples include both fabricated and un-fabricated physical examples of materials, products and units of work both as complete units and as smaller portions of units of work either for limited visual inspection or (where indicated) for more detailed testing and analysis.

a. Mock-ups are a special form of samples that are too large or otherwise inconvenient for handling in specified manner for transmittal of sample submittals.

4) Quality Assurance Submittals: Submit quality-control submittals, including design data, certifications, manufacturer's instructions, manufacturer's field reports, and other quality-control submittals as required under other Sections of Specifications.

a. Certifications: Where other Sections of Specifications require certification that a product, material, or installation complies with specified requirements; submit a notarized certification from manufacturer certifying compliance with specified requirements.

b. Signature: an officer of manufacturer or other individual authorized to sign documents on behalf of company shall sign Certification.

5) Miscellaneous submittals related directly to the work (non-administrative) include warranties, maintenance agreements, workmanship bonds, project photographs, survey data and reports, physical work records, quality testing and certifying reports, copies of industry standards, record drawings, field measurement data, operating and maintenance materials, overrun stock, and similar information, devices and materials applicable to the work and not processed as shop drawings, product data or samples.

1.04 SUBMITTAL SCHEDULE

A. After development and acceptance of the Contractor's schedule, prepare a complete schedule of submittals. Submit the schedule within 10 days of the date required for establishment of the Contractor's construction schedule.

1. Coordinate submittal schedule with the list of subcontractors, schedule of values and the list of products as well as the Contractor's construction schedule.

2. Prepare the schedule in chronological order, include submittals required during the first 30 days of construction. Provide the following information:

a. Scheduled date for the first submittal.
b. Related section number.
c. Submittal category.
d. Name of subcontractor.
e. Description of the part of the work covered.
f. Scheduled date for resubmittal.
g. Scheduled date of the A/E's final release or approval.

B. Distribution: Following response to initial submittal, print and distribute copies to the A/E, Owner, subcontractors, and other parties required to comply with the submittal dates indicated. Post copies in the Project meeting room and field office.

1. When revisionare made, distribute to the same parties and post in same location. Delete parties from the distribution when they have completed their assigned portion of the work and are no longer involved in construction activities.

C. Schedule Updating: Revise the schedule after each meeting or activity, where revisions have been recognized or made. Issue the updates schedule concurrently with the report of each meeting.

1.05 GENERAL SUBMITTAL REQUIREMENTS

A. Scheduling: Where appropriate in administrative submittals (listing of products, manufacturers, suppliers and subcontractors, and in job progress schedule), show principal work-related submittals and time requirements for coordination of submittal activity with related work in each instance.

1) Listing: Prepare a separate listing, organized by related specification section number sequence, showing principal work-related submittals and their initial submittal dates as required for coordination of the work. Submit listing within 30 days of date of commencement of the work.

B. Coordination and Sequencing: Coordinate preparation and processing of submittals with performance of the work so that work will not be delayed by submittals. Coordinate and sequence different categories of submittals for same work and for interfacing units of work so that one will not be delayed for coordination of A/E's review with another.

C. Preparation of Submittals: Provide permanent marking on each submittal to identify project, date, contractor, subcontractor, and consecutively number all submittals using the specification section of the particular item as a prefix, i.e., 08 10 00-1, 08 10 00-2, 10 16 00-3, 10 16 00-4, etc. Note: Also consecutively number each submittal forwarded to the architect. On the top right hand corner of each submittal copy consecutively number each submittal with a ½" high circled number. Do not reuse numbers and do not add prefixes to previously used numbers. Show contractor's executed review and approval marking (contractor's stamp must specifically note contractor's approval of submittal); see sample of contractor's stamp required and provide a 3" x 3" blank area on submittal for Architect/Engineer's marking. Package each submittal appropriately for transmittal and handling. Submittals which are received from sources other than through contractor's office will be returned by A/E without review.

1.06 USE OF ELECTRONIC FILES FOR CONSTRUCTION OR PREPARATION OF SUBMITTALS

A. Use of Electronic Files: At the request of the successful contractor, the architect and/or consultants may provide electronic files for the convenience of the contractor to be used in construction or the preparation of shop drawings related to the project. Neither VCS Architects, nor their consultants make any representation as to the compatibility of these files with your hardware or your software beyond the specified release of the referenced software.

B. In accepting and utilizing any drawings or other data on any form of electronic media generated and provided by VCS Architects, or their consultants, who shall be deemed the author of the drawings and data, and shall retain all common law, statutory law and other rights, including copyrights. The electronic files submitted by VCS Architects, or their consultants to the undersigned are submitted for an acceptance period of 30 days. Any defects the undersigned discovers during this period will be reported to VCS Architects, .

C. Data contained on these electronic files is part of VCS Architects, and their consultants instruments of service and shall not be used by you or anyone else receiving this data through or from you for any purpose other than as a convenience in the construction layout or preparation of shop drawings for the referenced project. Any other use or reuse by you or by others, will be at your sole risk and without liability or legal exposure to VCS Architects, or their consultants. You agree to make no claim and hereby waive, to the fullest extent permitted by law, any claim or cause of action of any nature against VCS Architects, or their consultants, their officers, directors, employees, agents or sub-consultants which may arise out of or in connection with your use of the electronic files. In addition, the undersigned agrees, to the fullest extent permitted by law, to indemnify and hold VCS Architects, and their consultants harmless from any damage, liability or cost, including reasonable attorney's fees and costs of defense, arising from any changes made by anyone other than VCS Architects, or their consultants or from any reuse of drawings and data without the prior written consent of VCS Architects, Furthermore, you shall, to the fullest extent permitted by law, indemnify and hold harmless VCS Architects, and their consultants from all claims, damages, losses and expenses, including attorney's fees arising out of or resulting from your use of these electronic files.

D. <u>These electronic files are not contract documents.</u> Significant differences may exist between these electronic files and corresponding hard copy contract documents due to

addenda, change orders or other revisions. Neither VCS Architects, nor their consultants make any representation regarding the accuracy or completeness of the electronic files you receive. In the event that a conflict arises between the signed contract documents prepared by VCS Architects, or their consultants and electronic files, the signed contract documents shall govern. You are responsible for determining if any conflict exists. By your use of these electronic files, you are not relieved of your duty to fully comply with the contract documents, including and without limitation, the need to check, confirm and coordinate all dimensions and details, take field measurements, review structural shop drawings, verify field conditions and coordinate your work with that of other contractors for the project.

E. Because of the potential that the information presented on the electronic files can be modified, unintentionally or otherwise, VCS Architects, and their consultants reserve the right to remove all indications of its ownership and/or involvement from each electronic display.

F. Under no circumstances shall transfer of the drawings and other instruments of service on electronic media for use by the undersigned be deemed a sale by VCS Architects, or their consultants, and neither VCS Architects, nor their consultants make any warranties, either express or implied, of merchantability and fitness for any particular purpose. In no event shall VCS Architects, or their consultants be liable for any loss of profit or any consequential damages.

1.07 SUBMITTAL PROCEDURES

A. Package each submittal appropriately for transmittal and handling. Submittals which are received from sources other than through contractor's office will be returned by A/E without review.

B. Transmittal Form: Prepare a draft of special transmittal form for project and submit to architect for acceptance. Provide places to indicate project, date, "to," "from" names of subcontractors, suppliers, manufacturers, required references, category and type of submittal, purpose, description, distribution record (for both transmittal and submittals), and signature of transmitter.

C Provide contractor's certification on form, ready for execution, stating that information submitted complies with requirements of contract documents.

D. By approving and submitting shop drawings, product data, samples and similar submittals, the contractor represents that the contractor has determined and verified materials, field measurements and field construction criteria related thereto and has checked and coordinated the information contained within such submittals with the requirements of the work and of the contract documents. At the time of submission, Contractor shall inform the Architect and Engineers in writing of any deviation in shop drawings or samples from the requirements of the Contract Documents.

E. The contractor is to maintain a complete copy of all submittals and project data for the owner. Turn this copy over to the owner along with other final closeout documents. Organize these submittals by division of work and present them to the owner in labeled file boxes.

1.08 SPECIFIC CATEGORY SUBMITTAL REQUIREMENTS

A. Shop Drawings: Provide newly-prepared information on sheets with graphic information at accurate scale (except as otherwise indicated), with name of preparer indicated (firm name). Show dimensions and note which are based on field measurement. Identify materials and products in the work shown. Indicate compliance with standards and special coordination requirements.

B. Product Data: Collect required data into one submittal for each unit of work or system and mark each copy to show which choices and options are applicable to project. Include manufacturer's standard printed recommendations for application and use, compliance with standards, application of labels and seals, notation of field measurements, which have been checked, and special coordination requirements. Maintain one set of product data (for each submittal) at project site, available for reference by A/E and others.

1) Submittals: Do not submit product data or allow its use on the project until compliance with requirements of contract documents has been confirmed by contractor. Submittal is for information and record unless otherwise indicated. Submit 3 copies, plus number of copies needed for contractor, owner's records, and distribution to others.

2) Installer's Copy: Do not proceed with installation of materials, products, or systems until final copy of applicable product data is in possession of installer.

C. Samples: Provide units identical with final condition of proposed materials or products for the work. Include "range" samples (not less than 3 units) where unavoidable variations must be expected and describe or identify variations between units of each set. Provide full set of optional samples where A/E's selection is required. Prepare samples to match A/E's sample where so indicated. Include information with each sample to show generic description, source or product name and manufacturer, limitations, and compliance with standards. Samples are submitted for review and confirmation of color, pattern, texture and "kind" by A/E. Architect/Engineer will not "test" samples for compliance with other requirements, which are, therefore, the exclusive responsibility of the contractor.

D. Quality Control Set: Maintain returned final set of samples at project site in suitable condition and available for quality control comparisons by Architect/Engineer and by others.

1) Reusable Samples: Returned samples, which are intended or permitted to be incorporated in the work, are so indicated in the individual work sections and must be in undamaged condition at time of use.

E. Mock-Ups: Mock-ups and similar samples specified in individual work sections are recognized as a special type of sample. Comply with requirements for "samples" to greatest extent possible and process transmittal forms to provide a record of activity.

F. Inspection and Test Reports: Classify each as either "shop drawing" or "product data," depending upon whether report is uniquely prepared for project or a standard publication of workmanship control testing at point of production; process accordingly.

G. Request for Interpretations or Information (RFI): In the event the Contractor/Contractor feels the Contract Documents are not clear as to the intent of the Requirements for Construction then he shall submit a RFI to the Architect on the form included at the

end of this section of the specifications. Electronic versions of RFI form are available from Architect for Contractors use on this project.

H. Prior to submission of any RFI the Contractor shall:

1) Review the Contract Documents thoroughly for the specific information being requested.

2) Write a brief description of the Contractor's recommended solution to the RFI that will result in meeting the intent of the Contract Documents.

3) RFI's shall be sequentially numbered and dated.

4) Upon submission of this information the Architect will review and accept or give further interpretation of the documents within 7 days whenever possible. An additional 3 days should be anticipated for any RFI requiring Architects/Consultant/Owner review. Answer to RFI by Architect shall in no way give authorization to the Contractor to proceed with work that will increase contract time or construction cost.

I. Warranties: Refer to "products" section for specific general requirements on warranties, product/workmanship bonds, and maintenance agreements. In addition to copies desired for contractor's use, furnish two (2) executed copies, except furnish two (2) additional (confirmed) copies where required for maintenance manuals.

J. Standards: Where copy submittal is indicted and except where specified integrally with "product data" submittal, submit a single copy for Architect/Engineer's use. Where workmanship at project site and elsewhere is governed by standard, furnish additional copies to fabricators, installers, and others involved in performance of the work.

K. Close Out Submittals: Refer to individual work sections and to "close out" sections for specific requirements on submittal of close out information, materials, tools, and similar items.

1) Record Document Copies: Furnish one set.
2) Maintenance/Operating Manuals: Furnish two (2) bound copies.
3) Materials and Tools: Refer to individual work sections for required quantities of spare parts, extra, and overrun stock, maintenance tools and devices, keys, and similar physical units to be submitted.

L. General Distribution: Provide additional distribution of submittals (not included in foregoing copy submittal requirements) to subcontractors, suppliers, fabricators, installers, governing authorities, and others as necessary for proper performance of the work. Include such additional copies in transmittal to A/E where required to receive "Action" marking before final distribution. Record distributions on transmittal forms.

M. Contractors shall furnish to Owner, Manufacturer Safety Data Sheets (MSDS) for all materials installed on this project. The MSDS sheets must indicate no asbestos containing materials are included in the furnished product. Submit these MSDS sheets with each submittal and provide an additional complete set as part of the final close out documents.

1.09 ARCHITECT/ENGINEERS' REVIEW

A. Architect/Engineer will review submittal after Contractor has reviewed and coordinated with other trades. Architect/Engineer will mark with comments as noted above. When possible, architect will return submittal within two (2) weeks of receipt of submittal and within three (3) weeks for submittals requiring engineer or other consultant review. Where submittal must be held for coordination, architect/engineer will process submittal as soon as possible after all coordination information and material is provided by contractor.

B. NOTE: ALL COLOR SELECTION SUBMITTALS WILL BE HELD UNTIL CONTRACTOR NOTIFIES A/E THAT ALL SELECTIONS FOR WORK ARE SUBMITTED. A COLOR BOARD PRESENTATION WILL THEN BE PREPARED BY ARCHITECT FOR OWNER'S REVIEW AND APPROVAL; ALLOW FIVE (5) WEEKS FOR THIS PROCESS.

C.. Marking "Reviewed. No Exceptions Noted": Work may proceed provided it complies with contract documents.

D. Marking "Reviewed. Exceptions Noted": Work may proceed provided it complies with notations and corrections on submittal and with contract documents.

E. Marking "Rejected. Returned for Resubmittal": Do not proceed with work. Revise submittal in accordance with contract documents and resubmit without delay to obtain a different marking. Do not allow these submittals to be used in connection with performance of the work.

F. NOTE: The contractor shall not be relieved of responsibility for deviations from requirements of the contract documents by the architect's approval of shop drawings, product data, samples, or similar submittals unless the contractor has specifically informed the architect, in writing and on the submittal, of such deviation at the time of submittal and the architect has given written approval to the specific deviation. The contractor shall not be relieved of responsibility for errors or omissions in shop drawings, product data, samples, or similar submittals by the architect's approval thereof.

1.10 REPETITIVE REVIEW

A. Shop drawings, product data and samples submitted for each item, will be reviewed no more than two times at Architect's and Owner's expense. After second submittal shop drawings, product data and samples failing to comply with Contract requirements will be reviewed by Architect at Contractor's expense, based upon a flat rate of **$75.00 per hour** not to exceed $750.00 per each subsequent resubmittal. Contractor shall reimburse the Owner for additional submittal reviews. The Owner reserves the right to deduct said reimbursement from Contractor's monthly application for payment.

B. Need for resubmission of shop drawings, or delay in obtaining Architect's review of submittals, shall not entitle Contractor to an extension of Contract Time nor increase Contract Price, nor shall it become basis for a "Damage for Delay " claim.

End of Section

AGREEMENT WITH REGARD TO RELEASE OF ELECTRONIC (CAD) FILES TO CONTRACTOR

Project for which electronic files are to be used is:

_____

AutoCad Version Compatibility requested: (Default version AutoCad 2018)

Other _____

USE OF DIGITAL DATA FOR CONSTRUCTION OR PREPARATION OF

SUBMITTALS A. GENERAL PROVISIONS

1. The purpose of this Agreement is to grant a license from Pfluger Architects to the Contractor for the Contractor's use of Digital Data on the Project, and to set forth the license terms.

2. This Agreement is the entire and integrated agreement between the parties. Except as specifically set forth herein, this agreement does not create any other contractual relationship between the parties.

3. "Digital Data" is defined as information, communications, drawings, or designs created or stored for the Project in digital form. Digital Data specifically, but not exclusively, includes Autodesk Revit building information models (BIMs), and any and all BIM families, systems, profiles and annotations.

4. "Confidential Information" is defined as Digital Data that Pfluger Architects, or its successors or assigns, has designated as confidential and clearly marked with an indication such as "Confidential" or "Business Proprietary."

5. "The Contractor" means [identify the contractor by name and the extent to which parties associated with the contractor are to be included].

6. "Instruments of Service" means all drawings, specifications and other documents, including Digital Data.

7. "Pfluger Architects" means Pfluger Architects, L.P., its past and present partners, officers, directors, employees, agents, subsidiary and affiliated companies, attorneys, insurers, successors, and assigns.

B. LIMITED LICENSE FOR USE OF DIGITAL DATA

1. At the request of the Contractor, VCS Architects may transmit Digital Data for the convenience of the Contractor to be used in construction or the preparation of shop drawings related to the project.

2. VCS Architects grants the Contractor a nonexclusive, limited license to use the Digital Data solely and exclusively to perform services or construction for the Project in accordance with the conditions set forth herein.

3. By accepting and utilizing any Digital Data generated, provided or transmitted by VCS Architects, the Contractor agrees that VCS Architects retains its rights in the Digital Data, has authored the Digital Data, and maintains a copyright and any other intellectual property right it is entitled to in the Digital Data. By generating, providing or transmitting the Digital Data, VCS Architects does not grant to the Contractor an assignment of those rights, nor does VCS Architects convey to the Contractor any right in the software use to generate the Digital Data.

4. No other license or right shall be deemed granted or implied under this Agreement.

C. LICENSE CONDITIONS

1. The Digital Data are part of VCS Architects' Instruments of Service and shall not be used by the Contractor for any purpose other than as a convenience in the construction layout or preparation of shop drawings for the referenced project. Any other use or reuse of the Digital Data by the Contractor, or by others, will be at the Contractor's sole risk and without liability or legal exposure to VCS Architects.

2. The Contractor agrees to keep Confidential Information strictly confidential and not to disclose it to any other person except to (1) its employees; or (2) those who need to know the content of the Confidential Information in order to perform services or construction solely and exclusively for the Project.

4. The Digital Data submitted by VCS Architects or its consultants to the undersigned is submitted for an acceptance period of 30 days. Any defects the Contractor discovers during this period will be reported to VCS Architects.

5. The Contractor agrees to make no claim and hereby waives, to the fullest extent permitted by law, any claim, cause of action, or defense of any nature against VCS Architects or its consultants or sub-consultants which may arise out of or in connection with the Contractor's use of the Digital Data.

6. In addition, the Contractor agrees, to the fullest extent permitted by law, to indemnify and hold VCS Architects and its consultants harmless from any damage, liability or cost, including reasonable attorney's fees and costs of defense, arising from any changes made by anyone other than VCS Architects or its consultants, from any reuse of the Digital Data without the prior written consent of VCS Architects, or any other unlicensed use the Digital Data Furthermore, the Contractor, to the fullest extent permitted by law, indemnifies and holds harmless VCS Architects and its consultants from all claims, damages, losses and expenses, including attorney's fees arising out of or resulting from the Contractor's use of the Digital Data.

7. The Digital Data are not contract documents. Significant differences may exist between the Digital Data and corresponding hard copy contract documents due to addenda, change orders or other revisions. In the event that a conflict arises between the signed contract documents prepared by VCS Associates or its consultants and the Digital Data, the signed contract documents shall govern. The Contractor is responsible for determining if any conflict exists.

8. By the Contractor's use of the Digital Data, the Contractor is not relieved of its duty to fully comply with the contract documents, including and without limitation, the need to check, confirm and coordinate all dimensions and details, take field measurements, review structural shop drawings, verify field conditions and coordinate your work with that of other contractors for the project.

9. Neither VCS Architects nor its consultants make any representation regarding the accuracy or completeness of the Digital Data the Contractor receives.

10. Because of the potential that the information presented in the Digital Data can be modified, unintentionally or otherwise, VCS Architects and its consultants reserve the right to remove all indications of its ownership and/or involvement from each electronic display.

11. Under no circumstances shall transfer of the drawings or other instruments of service in Digital Data for use by the undersigned be deemed a sale by VCS Architects or its consultants, and neither VCS Architects nor its consultants make any warranties, either express or implied, of merchantability and fitness for any particular purpose. In no event shall Pfluger Architects or its consultants be liable for any loss of profit or any consequential damages.

A service fee of SEVENTYFIVE dollars ($75.00) per sheet is hereby remitted along with this form to VCS Architects, L.L.C.. prior to delivery of the electronic files. All terms and conditions above are hereby agreed to and accepted in their entirety as a condition of receipt of the referenced CAD file.

VCS Architects will furnish you electronic files of the following drawings:

All drawing sheets as listed on Title Page
A0.0

VCS
ARCHITECTS

Signature: _____ Date: _____

Contractor

Printed Name: _____

Signature: _____

SECTION 01 4000 - QUALITY REQUIREMENTS

PART 1 - GENERAL

1.1 SECTION REQUIREMENTS

A. Testing and inspecting services are required to verify compliance with requirements specified or indicated. These services do not relieve Contractor of responsibility for compliance with the Contract Document requirements.

B. Referenced Standards: If compliance with two or more standards is specified and the standards establish different or conflicting requirements, **comply with the most stringent requirement.** Refer uncertainties to Architect for a decision.

C. Minimum Quantity or Quality Levels: The quantity or quality level shown or specified shall be the minimum. The actual installation may exceed the minimum within reasonable limits. Indicated numeric values are minimum or maximum, as appropriate, for the context of requirements. Refer uncertainties to Architect for a decision.

D. Permits, Licenses, and Certificates: For Owner's records, submit copies of permits, licenses, certifications, inspection reports, notices, receipts for fee payments, and similar documents, established for compliance with standards and regulations bearing on performance of the Work.

E. Professional Engineer Qualifications: A professional engineer who is legally qualified to practice in State of Texas where Project is located and who is experienced in providing engineering services of the kind indicated.

F. Testing Agency Qualifications: An independent agency with the experience and capability to conduct testing and inspecting indicated; and where required by authorities having jurisdiction, that is acceptable to authorities.

G. Retesting/Re-inspecting: Regardless of whether original tests or inspections were Contractor's responsibility, provide quality-control services, including retesting and re-inspecting, for construction that replaced Work that failed to comply with the Contract Documents.

H. Associated Services: Cooperate with testing agencies and provide reasonable auxiliary services as requested. Provide the following:

1. Access to the Work.
2. Incidental labor and facilities necessary to facilitate tests and inspections.
3. Adequate quantities of representative samples of materials that require testing and inspecting. Assist agency in obtaining samples.
4. Facilities for storage and field curing of test samples.
5. Security and protection for samples and for testing and inspecting equipment.

I. Coordination: Coordinate sequence of activities to accommodate required quality-assurance and -control services with a minimum of delay and to avoid necessity of removing and replacing construction to accommodate testing and inspecting.

1. Schedule times for tests, inspections, obtaining samples, and similar activities.

J. Special Tests and Inspections: **(HISD Selected)** a qualified **testing agency** to conduct special tests and inspections required by authorities having jurisdiction and as required by owner. **Testing will be of footing excavations for proper soils, concrete testing, and soil compaction as required by Construction documents.**

PART 2 - PRODUCTS (Not Used)

PART 3 - EXECUTION

3.1 REPAIR AND PROTECTION

A. Repair and protection are Contractor's responsibility, regardless of the assignment of responsibility for quality-control services.

END OF SECTION 01 4000

SECTION 014200 - REFERENCES

PART 1 - GENERAL

1.1 GENERAL REQUIREMENTS

A. Publication Dates: Comply with standards in effect as of date of the Contract Documents unless otherwise indicated.

B. Abbreviations and Acronyms: Where abbreviations and acronyms are used in Specifications or other Contract Documents, they shall mean the recognized name of the entities in the following list. Names are subject to change and are believed to be accurate and up-to-date as of the date of the Contract Documents.

PRIVATE tbl1

AA	Aluminum Association, Inc. (The)
AAADM	American Association of Automatic Door Manufacturers
AABC	Associated Air Balance Council
AAMA	American Architectural Manufacturers Association
AASHTO	American Association of State Highway and Transportation Officials
AATCC	American Association of Textile Chemists and Colorists
ABAA	Air Barrier Association of America
ABMA	American Bearing Manufacturers Association
ACI	American Concrete Institute
ACPA	American Concrete Pipe Association
AEIC	Association of Edison Illuminating Companies, Inc. (The)
AF&PA	American Forest & Paper Association
AGA	American Gas Association
AHAM	Association of Home Appliance Manufacturers
AHRI	Air-Conditioning, Heating, and Refrigeration Institute, The
AI	Asphalt Institute
AIA	American Institute of Architects (The)

AISC	American Institute of Steel Construction
AISI	American Iron and Steel Institute
AITC	American Institute of Timber Construction
ALSC	American Lumber Standard Committee, Incorporated
AMCA	Air Movement and Control Association International, Inc.
ANSI	American National Standards Institute
AOSA	Association of Official Seed Analysts, Inc.
APA	Architectural Precast Association
APA	APA - The Engineered Wood Association
API	American Petroleum Institute
ARI	Air-Conditioning & Refrigeration Institute
ARMA	Asphalt Roofing Manufacturers Association
ASCE	American Society of Civil Engineers
ASCE/SEI	American Society of Civil Engineers/Structural Engineering Institute (See ASCE)
ASHRAE	American Society of Heating, Refrigerating and Air-Conditioning Engineers
ASME	ASME International (American Society of Mechanical Engineers International)
ASSE	American Society of Sanitary Engineering
ASTM	ASTM International (American Society for Testing and Materials International)
AWCI	Association of the Wall and Ceiling Industry
AWCMA	American Window Covering Manufacturers Association (Now WCMA)
AWI	Architectural Woodwork Institute
AWPA	American Wood Protection Association (Formerly: American Wood Preservers' Association)
AWS	American Welding Society

AWWA	American Water Works Association
BHMA	Builders Hardware Manufacturers Association
BIA	Brick Industry Association (The)
BICSI	BICSI, Inc.
BIFMA	BIFMA International (Business and Institutional Furniture Manufacturer's Association International)
BISSC	Baking Industry Sanitation Standards Committee
CCC	Carpet Cushion Council
CDA	Copper Development Association
CEA	Canadian Electricity Association
CEA	Consumer Electronics Association
CFFA	Chemical Fabrics & Film Association, Inc.
CGA	Compressed Gas Association
CIMA	Cellulose Insulation Manufacturers Association
CISCA	Ceilings & Interior Systems Construction Association
CISPI	Cast Iron Soil Pipe Institute
CLFMI	Chain Link Fence Manufacturers Institute
CPA	Composite Panel Association
CPPA	Corrugated Polyethylene Pipe Association
CRI	Carpet and Rug Institute (The)
CRRC	Cool Roof Rating Council
CRSI	Concrete Reinforcing Steel Institute
CSA	Canadian Standards Association
CSA	CSA International (Formerly: IAS - International Approval Services)
CSI	Cast Stone Institute
CSI	Construction Specifications Institute (The)

CSSB	Cedar Shake & Shingle Bureau
CTI	Cooling Technology Institute (Formerly: Cooling Tower Institute)
DHI	Door and Hardware Institute
EIA	Electronic Industries Alliance
EIMA	EIFS Industry Members Association
EJCDC	Engineers Joint Contract Documents Committee
EJMA	Expansion Joint Manufacturers Association, Inc.
ESD	ESD Association (Electrostatic Discharge Association)
ETL SEMCO	Intertek ETL SEMCO (Formerly: ITS - Intertek Testing Service NA)
FM Approvals	FM Approvals LLC
FM Global	FM Global (Formerly: FMG - FM Global)
FRSA	Florida Roofing, Sheet Metal & Air Conditioning Contractors Association, Inc.
FSA	Fluid Sealing Association
FSC	Forest Stewardship Council
GA	Gypsum Association
GANA	Glass Association of North America
GRI	(Part of GSI)
GS	Green Seal
GSI	Geosynthetic Institute
HI	Hydronics Institute
HI/GAMA	Hydronics Institute/Gas Appliance Manufacturers Association Division of Air-Conditioning, Heating, and Refrigeration Institute (AHRI)
HMMA	Hollow Metal Manufacturers Association (Part of NAAMM)

HPVA	Hardwood Plywood & Veneer Association
IAPSC	International Association of Professional Security Consultants
ICBO	International Conference of Building Officials
ICEA	Insulated Cable Engineers Association, Inc.
ICPA	International Cast Polymer Association
ICRI	International Concrete Repair Institute, Inc.
IEC	International Electrotechnical Commission
IEEE	Institute of Electrical and Electronics Engineers, Inc. (The)
IESNA	Illuminating Engineering Society of North America
IEST	Institute of Environmental Sciences and Technology
IGMA	Insulating Glass Manufacturers Alliance
ILI	Indiana Limestone Institute of America, Inc.
ISA	Instrumentation, Systems, and Automation Society, The
ISO	International Organization for Standardization Available from ANSI
ISSFA	International Solid Surface Fabricators Association
ITS	Intertek Testing Service NA (Now ETL SEMCO)
ITU	International Telecommunication Union
KCMA	Kitchen Cabinet Manufacturers Association
LGSEA	Light Gauge Steel Engineers Association
LPI	Lightning Protection Institute
MBMA	Metal Building Manufacturers Association
MCA	Metal Construction Association
MFMA	Maple Flooring Manufacturers Association, Inc.
MFMA	Metal Framing Manufacturers Association, Inc.
MH	Material Handling

	(Now MHIA)
MHIA	Material Handling Industry of America
MIA	Marble Institute of America
MPI	Master Painters Institute
MSS	Manufacturers Standardization Society of The Valve and Fittings Industry Inc.
NAAMM	National Association of Architectural Metal Manufacturers
NACE	NACE International (National Association of Corrosion Engineers International)
NADCA	National Air Duct Cleaners Association
NAGWS	National Association for Girls and Women in Sport
NAIMA	North American Insulation Manufacturers Association
NBGQA	National Building Granite Quarries Association, Inc.
NCMA	National Concrete Masonry Association
NCTA	National Cable & Telecommunications Association
NEBB	National Environmental Balancing Bureau
NECA	National Electrical Contractors Association
NeLMA	Northeastern Lumber Manufacturers' Association
NEMA	National Electrical Manufacturers Association
NETA	InterNational Electrical Testing Association
NFPA	NFPA (National Fire Protection Association)
NFRC	National Fenestration Rating Council
NGA	National Glass Association
NHLA	National Hardwood Lumber Association
NLGA	National Lumber Grades Authority
NOFMA	NOFMA: The Wood Flooring Manufacturers Association (Formerly: National Oak Flooring Manufacturers Association)

NOMMA	National Ornamental & Miscellaneous Metals Association
NRCA	National Roofing Contractors Association
NRMCA	National Ready Mixed Concrete Association
NSF	NSF International (National Sanitation Foundation International)
NSSGA	National Stone, Sand & Gravel Association
NTMA	National Terrazzo & Mosaic Association, Inc. (The)
PCI	Precast/Prestressed Concrete Institute
PDI	Plumbing & Drainage Institute
PGI	PVC Geomembrane Institute
PTI	Post-Tensioning Institute
RCSC	Research Council on Structural Connections
RFCI	Resilient Floor Covering Institute
RIS	Redwood Inspection Service
SAE	SAE International
SCAQMD	South Coast Air Quality Management District
SCTE	Society of Cable Telecommunications Engineers
SDI	Steel Deck Institute
SDI	Steel Door Institute
SEFA	Scientific Equipment and Furniture Association
SEI/ASCE	Structural Engineering Institute/American Society of Civil Engineers (See ASCE)
SIA	Security Industry Association
SJI	Steel Joist Institute
SMA	Screen Manufacturers Association
SMACNA	Sheet Metal and Air Conditioning Contractors' National Association

SMPTE	Society of Motion Picture and Television Engineers
SPFA	Spray Polyurethane Foam Alliance (Formerly: SPI/SPFD - The Society of the Plastics Industry, Inc.; Spray Polyurethane Foam Division)
SPIB	Southern Pine Inspection Bureau (The)
SPRI	Single Ply Roofing Industry
SSINA	Specialty Steel Industry of North America
SSPC	SSPC: The Society for Protective Coatings
STI	Steel Tank Institute
SWI	Steel Window Institute
TCNA	Tile Council of North America, Inc.
TEMA	Tubular Exchanger Manufacturers Association
TIA/EIA	Telecommunications Industry Association/Electronic Industries Alliance
TMS	The Masonry Society
TPI	Truss Plate Institute, Inc.
TPI	Turfgrass Producers International
TRI	Tile Roofing Institute
UL	Underwriters Laboratories Inc.
UNI	Uni-Bell PVC Pipe Association
USGBC	U.S. Green Building Council
USITT	United States Institute for Theatre Technology, Inc.
WASTEC	Waste Equipment Technology Association
WCLIB	West Coast Lumber Inspection Bureau
WCMA	Window Covering Manufacturers Association
WDMA	Window & Door Manufacturers Association (Formerly: NWWDA - National Wood Window and Door Association)
WI	Woodwork Institute (Formerly: WIC - Woodwork Institute of California)

WIC	Woodwork Institute of California (Now WI)
WMMPA	Wood Moulding & Millwork Producers Association
WSRCA	Western States Roofing Contractors Association
WWPA	Western Wood Products Association

C. Code Agencies: Where abbreviations and acronyms are used in Specifications or other Contract Documents, they shall mean the recognized name of the entities in the following list. Names, are subject to change and are believed to be accurate and up-to-date as of the date of the Contract Documents.

PRIVATE tbl2

DIN	Deutsches Institut fur Normung e.V.
IAPMO	International Association of Plumbing and Mechanical Officials
ICC	International Code Council
ICC-ES	ICC Evaluation Service, Inc.

DIN	Deutsches Institut fur Normung e.V.
IAPMO	International Association of Plumbing and Mechanical Officials
ICC	International Code Council
ICC-ES	ICC Evaluation Service, Inc.

PART 2 - PRODUCTS (Not Used)

PART 3 - EXECUTION (Not Used)

END OF SECTION 014200

SECTION 015000 - TEMPORARY FACILITIES AND CONTROLS

PART 1 - GENERAL

1.1 SECTION REQUIREMENTS

A. Use Charges: Installation and removal of and use charges for temporary facilities shall be included in the Contract Sum unless otherwise indicated.

B. **Water and Electric Power**: Available from Owner's existing system without metering and without payment of use charges. Provide connections and extensions of services as required for construction operations.

C. Electric Service: Comply with NECA, NEMA, and UL standards and regulations for temporary electric service. Install service to comply with NFPA 70.

D. Accessible Temporary Egress: Comply with applicable provisions in ICC A117.1.

PART 2 - PRODUCTS

2.1 MATERIALS

2.2 TEMPORARY FACILITIES

A. Provide field office with Conference Room.

B. Dumpster, storage and fabrication sheds, laydown yard and other support facilities for construction operations will be discussed at Pre-Construction meeting with owner and architect.

C. Store combustible materials apart from building.

2.3 EQUIPMENT

A. Fire Extinguishers: Portable, UL rated; with class and extinguishing agent as required by locations and classes of fire exposures.
   1. Permanent HVAC System: If Owner authorizes use of permanent HVAC system for temporary use during construction, provide filter with MERV of [**8**] at each return-air grille in system and remove at end of construction.

3.1 TEMPORARY UTILITY INSTALLATION

A. General: Install temporary service or connect to existing service.

1. Arrange with utility company, Owner, and existing users for time when service can be interrupted, if necessary, to make connections for services.

2. General Contractor to provide utility shut down schedule for review and approval by owner.

B. Sanitary Facilities: Provide temporary toilets, wash facilities, and drinking-water fixtures. Comply with regulations and health codes for type, number, location, operation, and maintenance of fixtures and facilities.

1. Toilets: Use of Owner's existing toilet facilities will NOT be permitted.

C. Heating[**and Cooling**]: Provide temporary heating[**and cooling**] required for curing or drying of completed installations or for protecting installed construction from adverse effects of low temperatures or high humidity. Select equipment that will not have a harmful effect on completed installations or elements being installed.

D. Provide temporary lighting with local switching that provides adequate illumination for construction operations, observations, inspections, and traffic conditions.

3.2 SUPPORT FACILITIES INSTALLATION

A. Install project identification and other signs in locations **approved by Owner** to inform the public and persons seeking entrance to Project.

B. Waste Disposal Facilities: Provide waste-collection containers in sizes adequate to handle waste from construction operations. Comply with requirements of authorities having jurisdiction. (Dumpsters, waste collection to be discussed during Pre-Construction meeting)

C. Temporary Elevator Use: **Use of elevators is not permitted.**

D. Deliveries: Material Deliveries to the site will occur 9:00 AM – 2:00 PM and after 4:30 PM. Deliveries do NOT need to check in at school office – Only onsite construction personnel

3.3 SECURITY AND PROTECTION FACILITIES INSTALLATION

A. Provide protection, operate temporary facilities, and conduct construction as required to comply with environmental regulations and that minimize possible air, waterway, and subsoil contamination or pollution or other undesirable effects.

B. Barricades, Warning Signs, and Lights: Comply with requirements of authorities having jurisdiction for erecting structurally adequate barricades, including warning signs and lighting.

C. Provide temporary enclosures for protection of construction, in progress and completed, from exposure, foul weather, other construction operations, and similar activities. Provide temporary weathertight enclosure for building exterior if required for scope of work.

D. Provide floor-to-ceiling dustproof partitions to limit dust and dirt migration and to separate areas occupied by **Owner and tenants** from fumes and noise.

E. Install and maintain temporary fire-protection facilities. Comply with NFPA 241.

3.4 MOISTURE AND MOLD CONTROL

A. Before installation of weather barriers, protect materials from water damage and keep porous and organic materials from coming into prolonged contact with concrete.

B. After installation of weather barriers but before full enclosure and conditioning of building, protect as follows:

1. Do not load or install drywall or porous materials into partially enclosed building.
2. Discard water-damaged material.
3. Do not install material that is wet.
4. Discard, replace, or clean stored or installed material that begins to grow mold.
5. Perform work in a sequence that allows any wet materials adequate time to dry before enclosing the material in drywall or other interior finishes.

3.5 OPERATION, TERMINATION, AND REMOVAL

A. Operation: No noisy and disruptive work during the school day/ hours of operation. May work within the area of work during school day if not disruptive.

B. Supervision: Enforce strict discipline in use of temporary facilities. To minimize waste and abuse, limit availability of temporary facilities to essential and intended uses.

C. Remove each temporary facility when need for its service has ended, when it has been replaced by authorized use of a permanent facility, or no later than Substantial Completion.

D. At Substantial Completion, repair, renovate, and clean permanent facilities used during construction period.

END OF SECTION 015000

SECTION 016000 - PRODUCT REQUIREMENTS

PART 1 - GENERAL

1.1 SECTION REQUIREMENTS

A. The term "product" includes the terms "material," "equipment," "system," and terms of similar intent.

B. Comparable Product Requests: Submit request for consideration of each comparable product. Identify product or fabrication or installation method to be replaced.

1. Show compliance with requirements for comparable product requests.
2. Architect will review the proposed product and notify Contractor of its acceptance or rejection.

C. Basis-of-Design Product Specification Submittal: Show compliance with requirements.

D. Compatibility of Options: If Contractor is given option of selecting between two or more products, select product compatible with products previously selected.

E. Deliver, store, and handle products using means and methods that will prevent damage, deterioration, and loss, including theft. Comply with manufacturer's written instructions.

1. Schedule delivery to minimize long-term storage at Project site and to prevent overcrowding of construction spaces.
2. Deliver products to Project site in manufacturer's original sealed container or packaging, complete with labels and instructions for handling, storing, unpacking, protecting, and installing.
3. Inspect products on delivery to ensure compliance with the Contract Documents and to ensure that products are undamaged and properly protected.
4. Store materials in a manner that will not endanger Project structure.
5. Store products that are subject to damage by the elements, under cover in a weathertight enclosure above ground, with ventilation adequate to prevent condensation.

F. Warranties specified in other Sections shall be in addition to, and run concurrent with, other warranties required by the Contract Documents. Manufacturer's disclaimers and limitations on product warranties do not relieve Contractor of obligations under requirements of the Contract Documents.

PART 2 - PRODUCTS

2.1 PRODUCT SELECTION PROCEDURES

A. Provide products that comply with the Contract Documents, are undamaged, and, unless otherwise indicated, are new at the time of installation.

1. Provide products complete with accessories, trim, finish, and other devices and components needed for a complete installation and the intended use and effect.
2. Where products are accompanied by the term "as selected," Architect will make selection.
3. Descriptive, performance, and reference standard requirements in the Specifications establish salient characteristics of products.

B. Where the following headings are used to list products or manufacturers, the Contractor's options for product selection are as follows:

1. Products:

   a. Where requirements include "one of the following," provide one of the products listed that complies with requirements.
   b. Where requirements do not include "one of the following," provide one of the products listed that complies with requirements or a comparable product.

2. Manufacturers:

   a. Where requirements include "one of the following," provide a product that complies with requirements by one of the listed manufacturers.
   b. Where requirements do not include "one of the following," provide a product that complies with requirements by one of the listed manufacturers or another manufacturer.

3. Basis-of-Design Product: Provide the product named, or indicated on the Drawings, or a comparable product by one of the listed manufacturers.

C. Where Specifications require "match Architect's sample," provide a product that complies with requirements and matches Architect's sample. Architect's decision will be final on whether a proposed product matches.

D. Where Specifications include the phrase "as selected by Architect from manufacturer's full range" or similar phrase, select a product that complies with requirements. Architect will select color, gloss, pattern, density, or texture from manufacturer's product line that includes both standard and premium items.

2.2 COMPARABLE PRODUCTS

A. Architect will consider Contractor's request for comparable product when the following conditions are satisfied:

1. Evidence that the proposed product does not require revisions to the Contract Documents, that it is consistent with the Contract Documents and will produce the indicated results, and that it is compatible with other portions of the Work.
2. Detailed comparison of significant qualities of proposed product with those named in the Specifications.
3. List of similar installations for completed projects, if requested.
4. Samples, if requested.

PART 3 - EXECUTION (Not Used)

END OF SECTION 016000

SECTION 017000 - EXECUTION AND CLOSEOUT REQUIREMENTS

PART 1 - GENERAL

1.1 EXECUTION REQUIREMENTS

A. Cutting and Patching:

1. Structural Elements: When cutting and patching structural elements, notify Architect of locations and details of cutting and await directions from Architect before proceeding. Shore, brace, and support structural elements during cutting and patching.
2. Operational Elements: Do not cut and patch operating elements and related components in a manner that results in reducing their capacity to perform as intended or that results in increased maintenance or decreased operational life or safety.
3. Visual Elements: Do not cut and patch construction in a manner that results in visual evidence of cutting and patching. Do not cut and patch exposed construction in a manner that would, in Architect's opinion, reduce the building's aesthetic qualities.

B. Manufacturer's Installation Instructions: Obtain and maintain on-site manufacturer's written recommendations and instructions for installation of products and equipment.

1.2 CLOSEOUT SUBMITTALS

A. Contractor's List of Incomplete Items: Initial submittal at Substantial Completion.

B. Certified List of Incomplete Items: Final submittal at Final Completion.

C. Operation and Maintenance Data: Submit Two **copies** of manual.

D. PDF Electronic File: Assemble manual into a composite electronically indexed file. Submit on digital media.

E. Record Drawings: Submit two set(s) of marked-up record prints.

F. Record Digital Data Files: Submit data file and **one** set(s) of plots.

G. Record Product Data: Submit **annotated PDF electronic files and directories** of each submittal.

H. Submit video documentation that systems are operational prior and after construction.

1.3 SUBSTANTIAL COMPLETION PROCEDURES

A. Prepare a list of items to be completed and corrected (punch list), the value of items on the list, and reasons why the Work is not complete.

B. Submittals Prior to Substantial Completion: Before requesting Substantial Completion inspection, complete the following:

1. Obtain and submit releases from authorities having jurisdiction permitting Owner unrestricted use of the Work and access to services and utilities. Include occupancy permits, operating certificates, and similar releases.
2. Submit closeout submittals specified in other sections, including project record documents, operation and maintenance manuals, property surveys, similar final record information, warranties, workmanship bonds, maintenance service agreements, final certifications, and similar documents.
3. Submit maintenance material submittals specified in other sections, including tools, spare parts, extra materials, and similar items, and deliver to location designated by Architect.
4. Submit test/adjust/balance records.
5. Submit changeover information related to Owner's occupancy, use, operation, and maintenance.

C. Procedures Prior to Substantial Completion: Before requesting Substantial Completion inspection, complete the following:

1. Advise Owner of pending insurance changeover requirements.
2. Make final changeover of permanent locks and deliver keys to Owner.
3. Complete startup and testing of systems and equipment.
4. Perform preventive maintenance on equipment used prior to Substantial Completion.
5. Remove temporary facilities and controls.
6. Complete final cleaning requirements, including touchup painting.
7. Touch up and otherwise repair and restore marred exposed finishes to eliminate visual defects.

D. Inspection: Submit a written request for inspection for Substantial Completion. On receipt of request, Architect will proceed with inspection or advise Contractor of unfulfilled requirements. Architect will prepare the Certificate of Substantial Completion after inspection or will advise Contractor of items that must be completed or corrected before certificate will be issued.

1.4 FINAL COMPLETION PROCEDURES

A. Submittals Prior to Final Completion: Before requesting inspection for determining final completion, complete the following:

1. Submit a final Application for Payment.
2. Submit certified copy of Architect's Substantial Completion inspection list of items to be completed or corrected (punch list), endorsed and dated by Architect. Certified copy of the list shall state that each item has been completed or otherwise resolved.
3. Certificate of Insurance: Submit evidence of final, continuing insurance coverage complying with insurance requirements.
4. Complete owner requirements of documents for closeout.

B. Submit a written request for final inspection for acceptance. On receipt of request, Architect will either proceed with inspection or notify Contractor of unfulfilled requirements. Architect will prepare final Certificate for Payment after inspection or will advise Contractor of items that must be completed or corrected before certificate will be issued.

1. Reinspection: Request reinspection when the Work identified in previous inspections as incomplete is completed or corrected.

PART 2 - PRODUCTS

2.1 MATERIALS

A. In-Place Materials: Use materials for patching identical to in-place materials. For exposed surfaces, use materials that visually match in-place adjacent surfaces to the fullest extent possible.

B. Cleaning Agents: Use cleaning materials and agents recommended by manufacturer or fabricator of the surface to be cleaned. Do not use cleaning agents that are potentially hazardous to health or property or that might damage finished surfaces.

1. Use cleaning products that comply with Green Seal's GS-37, or if GS-37 is not applicable, use products that comply with the California Code of Regulations maximum allowable VOC levels.

2.2 OPERATION AND MAINTENANCE DOCUMENTATION

A. Directory: Prepare a single, comprehensive directory of emergency, operation, and maintenance data and materials, listing items and their location to facilitate ready access to desired information.

B. Organization: Unless otherwise indicated, organize manual into separate sections for each system and subsystem, and separate sections for each piece of equipment not part of a system.

C. Organize data into three-ring binders with identification on front and spine of each binder, and envelopes for folded drawings. Include the following:

1. Manufacturer's operation and maintenance documentation.
2. Maintenance and service schedules.
3. Maintenance service contracts. Include name and telephone number of service agent.
4. Emergency instructions.
5. Spare parts list and local sources of maintenance materials.
6. Wiring diagrams.
7. Copies of warranties. Include procedures to follow and required notifications for warranty claims

2.3 RECORD DRAWINGS

A. Record Prints: Maintain a set of prints of the Contract Drawings and Shop Drawings, incorporating new and revised drawings as modifications are issued. Mark to show actual installation where installation varies from that shown originally. Accurately record information in an acceptable drawing technique.

1. Identify and date each record Drawing; include the designation "PROJECT RECORD DRAWING" in a prominent location.

B. Record Digital Data Files: Immediately before inspection for Certificate of Substantial Completion, review marked-up record prints with Architect. When authorized, prepare a full set of corrected digital data files of the Contract Drawings.

1. Format: **Same digital data software program, version, and operating system as the original Contract Drawings** & **Annotated PDF electronic file**.

PART 3 - EXECUTION

3.1 EXAMINATION AND PREPARATION

A. Existing Conditions: The existence and location of underground and other utilities and construction indicated as existing are not guaranteed. Before beginning sitework, investigate and verify the existence and location of underground utilities, **mechanical and electrical systems,** and other construction affecting the Work.

1. Video documentation that systems are operational prior and after construction.

B. Before proceeding with each component of the Work, examine substrates, areas, and conditions, with Installer or Applicator present where indicated, for compliance with requirements for installation tolerances and other conditions affecting performance.

1. Verify compatibility with and suitability of substrates.
2. Examine roughing-in for mechanical and electrical systems.
3. Examine walls, floors, and roofs for suitable conditions.

C. Proceed with installation only after unsatisfactory conditions have been corrected.

D. Take field measurements as required to fit the Work properly. Where portions of the Work are indicated to fit to other construction, verify dimensions of other construction by field measurements before fabrication.

E. Verify space requirements and dimensions of items shown diagrammatically on Drawings.

3.2 INSTALLATION

A. Locate the Work and components of the Work accurately, in correct alignment and elevation, as indicated.

1. Make vertical work plumb and make horizontal work level.
2. Conceal pipes, ducts, and wiring in finished areas unless otherwise indicated.

B. Comply with manufacturer's written instructions and recommendations.

C. Conduct construction operations so no part of the Work is subjected to damaging operations or loading in excess of that expected during normal conditions of occupancy.

D. Templates: Obtain and distribute to the parties involved templates for work specified to be factory prepared and field installed.

E. Attachment: Provide blocking and attachment plates and anchors and fasteners of adequate size and number to securely anchor each component in place. Where size and type of attachments are not indicated, verify size and type required for load conditions.

1. Mounting Heights: Where mounting heights are not indicated, mount components at heights directed by Architect.

F. Joints: Make joints of uniform width. Where joint locations in exposed work are not indicated, arrange joints for the best visual effect. Fit exposed connections together to form hairline joints.

G. Use products, cleaners, and installation materials that are not considered hazardous.

3.3 CUTTING AND PATCHING

A. Provide temporary support of work to be cut.

B. Protection: Protect in-place construction during cutting and patching to prevent damage. Provide protection from adverse weather conditions for portions of Project that might be exposed during cutting and patching operations.

C. Where existing services/systems are required to be removed, relocated, or abandoned, bypass such services/systems before cutting to **prevent** interruption to occupied areas.

D. Cutting: Cut in-place construction using methods least likely to damage elements retained or adjoining construction.

1. Cut holes and slots neatly to minimum size required, and with minimum disturbance of adjacent surfaces. Temporarily cover openings when not in use.

E. Patch with durable seams that are as invisible as possible. Provide materials and comply with installation requirements specified in other Sections.

1. Restore exposed finishes of patched areas and extend finish restoration into adjoining construction in a manner that will minimize evidence of patching and refinishing.
2. Where walls or partitions that are removed extend one finished area into another, patch and repair floor and wall surfaces in the new space. Provide an even surface of uniform finish, color, texture, and appearance.
3. Where patching occurs in a painted surface, prepare substrate and apply primer and intermediate paint coats appropriate for substrate over the patch, and apply final paint coat over entire unbroken surface containing the patch. Provide additional coats until patch blends with adjacent surfaces.

3.4 CLEANING

A. Clean Project site and work areas daily, including common areas. Dispose of materials lawfully.

1. Remove liquid spills promptly.
2. Where dust would impair proper execution of the Work, broom-clean or vacuum the entire work area, as appropriate.
3. Remove debris from concealed spaces before enclosing the space.

B. Complete the following cleaning operations before requesting inspection for certification of Substantial Completion:

1. Clean Project site, yard, and grounds, in areas disturbed by construction activities. Sweep paved areas; remove stains, spills, and foreign deposits. Rake grounds that are neither planted nor paved to a smooth, even-textured surface.
2. Sweep paved areas broom clean. Remove spills, stains, and other foreign deposits.
3. Remove labels that are not permanent.
4. Clean transparent materials, including mirrors. Remove excess glazing compounds.
5. Clean exposed finishes to a dust-free condition, free of stains, films, and foreign substances. Sweep concrete floors broom clean.
6. Vacuum carpeted surfaces and wax resilient flooring.
7. Wipe surfaces of mechanical and electrical equipment. Remove excess lubrication and foreign substances. Clean plumbing fixtures. Clean light fixtures, lamps, globes, and reflectors.
8. Replace disposable air filters and clean permanent air filters. Clean exposed surfaces of diffusers, registers, and grills.

3.5 OPERATION AND MAINTENANCE MANUAL PREPARATION

A. Operation and Maintenance Manuals: Assemble a complete set of operation and maintenance data indicating operation and maintenance of each system, subsystem, and piece of equipment not part of a system.

B. Manufacturers' Data: Where manuals contain manufacturers' standard printed data, include only sheets pertinent to product or component installed. Mark each sheet to identify each product or component incorporated into the Work. If data include more than one item in a tabular format, identify each item using appropriate references from the Contract Documents. Identify data applicable to the Work and delete references to information not applicable.

1. Prepare supplementary text if manufacturers' standard printed data are unavailable and where the information is necessary for proper operation and maintenance of equipment or systems.

C. Drawings: Prepare drawings supplementing manufacturers' printed data to illustrate the relationship of component parts of equipment and systems and to illustrate control sequence and flow diagrams.

3.6 DEMONSTRATION AND TRAINING

A. Engage qualified instructors to instruct Owner's personnel to adjust, operate, and maintain systems, subsystems, and equipment not part of a system. Include a detailed review of the following:

1. Include instruction for basis of system design and operational requirements, review of documentation, emergency procedures, operations, adjustments, troubleshooting, maintenance, and repairs.

END OF SECTION 017000

SECTION 017419 - CONSTRUCTION WASTE MANAGEMENT AND DISPOSAL

PART 1 - GENERAL

1.1 SECTION REQUIREMENTS

A. Action Submittals:

1. Waste Management Plan: Submit plan within twenty-one calendar] [**21**] days of date established for commencement of the Work.

B. Informational Submittals:

1. Waste Reduction Progress Reports: Submit concurrent with each Application for Payment. Include total quantity of waste, total quantity of waste salvaged and recycled, and percentage of total waste salvaged and recycled.
2. Records of Donations and Sales: Receipts for salvageable waste donated or sold to individuals and organizations. . Indicate whether organization is tax exempt.
3. Recycling and Processing Facility Records: Manifests, weight tickets, receipts, and invoices.
4. Landfill and Incinerator Disposal Records: Manifests, weight tickets, receipts, and invoices.
5. Statement of Refrigerant Recovery: Signed by refrigerant recovery technician responsible for recovering refrigerant, stating that all refrigerant that was present was recovered and that recovery was performed according to EPA regulations.

C. Refrigerant Recovery Technician Qualifications: Certified by EPA-approved certification program.

D. Waste Management Conference: Conduct conference at Project site to comply with requirements in Section 013000 "Administrative Requirements." Review methods and procedures related to waste management.

E. Waste Management Plan: Develop a waste management plan consisting of waste identification, waste reduction work plan, and cost/revenue analysis. Indicate quantities by weight or volume, but use same units of measure throughout waste management plan.

1. Salvaged Materials for Reuse: Identify materials that will be salvaged and reused.
2. Salvaged Materials for Sale: Identify materials that will be sold to individuals and organizations, include list of their names, addresses, and telephone numbers.
3. Salvaged Materials for Donation: Identify materials that will be donated to individuals and organizations, include list of their names, addresses, and telephone numbers.
4. Recycled Materials: Include list of local receivers and processors and type of recycled materials each will accept. Include names, addresses, and telephone numbers.
5. Cost/Revenue Analysis: Indicate total cost of waste disposal as if there was no waste management plan and net additional cost or net savings resulting from implementing waste management plan.

PART 2 - PRODUCTS

2.1 PERFORMANCE REQUIREMENTS

A. Achieve end-of-Project rates for salvage/recycling of **(20)** percent by weight of total nonhazardous solid waste generated by the Work.

PART 3 - EXECUTION

3.1 PLAN IMPLEMENTATION

A. General: Implement approved waste management plan. Provide handling, containers, storage, signage, transportation, and other items as required to implement waste management plan during the entire duration of the Contract.

B. Training: Train workers, subcontractors, and suppliers on proper waste management procedures, as appropriate for the Work occurring at Project site.

1. Distribute waste management plan to entities when they first begin work on-site. Review plan procedures and locations established for salvage, recycling, and disposal.

3.2 SALVAGING DEMOLITION WASTE

A. Salvaged Items for Reuse in the Work: Clean salvaged items and install salvaged items to comply with installation requirements for new materials and equipment.

B. Salvaged Items for **Sale and Donation**: **Not permitted**] on Project site.

C. Salvaged Items for Owner's Use: Clean salvaged items and store in a secure area until delivery to Owner.

D. Doors and Hardware: Brace open end of door frames. Except for removing door closers, leave door hardware attached to doors.

E. Equipment: Drain tanks, piping, and fixtures. Seal openings with caps or plugs.

F. Plumbing Fixtures: Separate by type and size.

G. Lighting Fixtures: Separate lamps by type and protect from breakage.

3.3 RECYCLING WASTE

A. General: Recycle paper and beverage containers used by on-site workers.

B. Packaging:

1. Cardboard and Boxes: Break down packaging into flat sheets. Bundle and store in a dry location.
2. Polystyrene Packaging: Separate and bag materials.
3. Pallets: As much as possible, require deliveries using pallets to remove pallets from Project site. For pallets that remain on-site, break down pallets into component wood pieces and comply with requirements for recycling wood.
4. Crates: Break down crates into component wood pieces and comply with requirements for recycling wood.

C. Asphaltic Concrete Paving: Grind asphalt to maximum [**4-inch (100-mm)**] size.

D. Asphaltic Concrete Paving: Break up and transport paving to asphalt-recycling facility.

E. Concrete: Remove reinforcement and other metals from concrete and sort with other metals.

1. Pulverize concrete to maximum [**4-inch (100-mm)**] size.

F. Masonry: Remove metal reinforcement, anchors, and ties from masonry and sort with other metals.

1. Pulverize masonry to maximum [**4-inch (100-mm)**] size.
2. Clean and stack undamaged, whole masonry units on wood pallets.

G. Wood Materials:

1. Sort and stack reusable members according to size, type, and length. Separate lumber, engineered wood products, panel products, and treated wood materials.
2. Clean Cut-Offs of Lumber: Grind or chip into small pieces.
3. Clean Sawdust: Bag sawdust that does not contain painted or treated wood.

H. Metals: Separate metals by type.

I. Asphalt Shingle Roofing: Remove and dispose of nails, staples, and accessories.

J. Gypsum Board: Stack large clean pieces on wood pallets or in container and store in a dry location. Remove edge trim and sort with other metals. Remove and dispose of fasteners.

K. Acoustical Ceiling Panels and Tile: Stack large clean pieces on wood pallets and store in a dry location.

L. Metal Suspension System: Separate metal members including trim, and other metals from acoustical panels and tile and sort with other metals.

M. Carpet **and Pad**: Roll large pieces tightly after removing debris, trash, adhesive, and tack strips.

1. Store clean, dry carpet **and pad** in a closed container or trailer provided by Carpet Reclamation Agency or carpet recycler.

N. Piping: Reduce piping to straight lengths and store by type and size. Separate supports, hangers, valves, sprinklers, and other components by type and size.

O. Conduit: Reduce conduit to straight lengths and store by type and size.

3.4 DISPOSAL OF WASTE

A. Except for items or materials to be salvaged, recycled, or otherwise reused, remove waste materials from Project site and legally dispose of them in a landfill or incinerator acceptable to authorities having jurisdiction.

B. Do not burn waste materials.

END OF SECTION 017419

SECTION 01 78 36 WARRANTIES AND GUARANTEES

PART 1 - GENERAL

1.01 RELATED DOCUMENTS

A. Drawings and General Provisions of Contract, including General and Supplementary Conditions and Division 1 Specification Sections, apply to work of this Section.

1.02 SUMMARY

B. In additions to the requirements of the General Conditions and Supplementary General Conditions of the Contract for Construction, the Contractor and each Subcontractor shall submit to the Owner a written guarantee, prior to release of final payment on a form approved by the Architect, for the work, materials, and equipment for a one (1) year period as specified herein after.

C. All guarantees, including extended guarantees specified hereinafter, shall be addressed to the Owner by name and submitted to the Architect, with other "Records" for Owner", all in binders, properly labeled.

D. Warranties/guarantees shall include parts, labor, and all other costs required to repair and/or replace items that may malfunction during the Warranty/Guarantee period.

1. Initiation of Requests: The Owner will initiate a request for corrective work at the project. This is accomplished by their submission of a request to the contractor with copies sent to the Owner's project manager. The Owner's project manager will review the item and determine if it is a maintenance item or warranty item. If determined to be a warranty item, he/she will address the Warranty Item Letter to the Contractor for action and will retain a copy in a suspense file and forward a copy to the Architect's CA representative. The contractor is to maintain a log of warranty items reported during the first year of Owner occupancy and send a copy of the log each month to the Owner and Architect for their records. At no time should a warranty item go unresolved more than 10 working days.
2. Response to Request: Upon receipt of the Warranty Item Letter, the Contractor should either initiate the repair with his work force or forward a copy to the subcontractor for action. If the Contractor forwards the action to the subcontractor, he will retain a copy in a suspense file. Prior to commencing any repairs the Contractor or subcontractor must contact the Owner prior to visiting the site.
3. Repairs and Acknowledgment of Repairs: Coordination should be made with the Owner's maintenance personnel prior to commencing repairs in case they wish to be present during repairs. In any event, OWNER maintenance personnel must be present to acknowledge completion of the repair and must sign off on a copy and date it. The contractor must then send a copy of the completed item back to the Owner's project manager. The return of the signed copy constitutes completion of the requests and all file copies can so be annotated.

E. All guarantees shall be for a period specified, commencing on date of acceptance of ENTIRE project by the Owner.

F. Additional guarantee requirements are included, but not limited to, the following: (Contractor(s) shall review the documents and provide all extended Guarantees listed.

1.	Air Conditioning and Refrigeration Systems	2 years
2.	HVAC Controls	2 years
3.	Electrical Equipment	2 years
4.	Damproofing and Waterproofing	2 years
5.	Sealants	2 years
6.	Glass, Glazing, Windows	2 years
7.	Aluminum Entrances and Storefronts	2 years
8.	Painting	2 years
9.	Combination locker locks	2 years
10.	Sheet Metal & Flashing	2 years
11.	Carpet Installation	3 years
12.	Resilient Athletic Flooring (manuf. Defects)	3 years
13.	Mirror Glazing	5 years
14.	Chiller Compressors	5 years
15.	Door Closures	5 years
16.	Sport Flooring	10 years
17.	Interlocking Athletic Flooring	10 years
18.	Boilers	10 years
19.	Roofing (weather tightness & finish)	20 years
20.	Metal Siding (finish)	20 years
21.	Wood Doors (interior)	Lifetime
22.	Carpet	Lifetime of Installation

Until receipt of these guarantees, final inspection will not be conducted nor final payment released

PART 2 - PRODUCTS- NOT USED

PART 3 - EXECUTION

3.1 GENERAL

A. Contractor shall arrange for all required inspections during warranty period. Regardless of the wording of individual warranties, the Owner shall not be responsible for notification for routine inspections during the General Contractor's warranty period.

B. Upon receipt of written or verbal notice by the Owner or Architect of a deficiency, the Contractor shall promptly respond with inspection and repair during the General Contractor's warranty period.

C. The General Contractor shall be responsible for coordinating the activities of subcontractors, suppliers and manufacturers during the General Contractor's warranty period and the subcontractor/ supplier/ manufacturer extended warranty period.

END OF SECTION 01 78 36

SECTION 032000 - CONCRETE REINFORCING

PART 1 - GENERAL

1.1 RELATED DOCUMENTS

A. Drawings and general provisions of the Contract, including General and Supplementary Conditions and Division 01 Specification Sections, apply to this Section.

1.2 SUMMARY

A. Section Includes:

1. Steel reinforcement bars.
2. Welded-wire reinforcement.

B. Related Requirements:
1. Section 321313 "Concrete Paving" for reinforcing related to concrete pavement and walks.

1.3 ACTION SUBMITTALS

A. Product Data: For the following:

1. Each type of steel reinforcement.
2. Epoxy repair coating.
3. Zinc repair material.
4. Bar supports.
5. Mechanical splice couplers.
6. Structural thermal break insulated connection system.

B. Shop Drawings: Comply with ACI SP-066:

1. Include placing drawings that detail fabrication, bending, and placement.
2. Include bar sizes, lengths, materials, grades, bar schedules, stirrup spacing, bent bar diagrams, bar arrangement, location of splices, lengths of lap splices, details of mechanical splice couplers, details of welding splices, tie spacing, hoop spacing, and supports for concrete reinforcement.
3. For structural thermal break insulated connection system, indicate general configuration, insulation dimensions, tension bars, compression pads, shear bars, and dimensions.

C. Construction Joint Layout: Indicate proposed construction joints required to build the structure.

1. Location of construction joints is subject to approval of the Architect.

D. Material Certificates: For each of the following, signed by manufacturers:

1. Epoxy-Coated Reinforcement: CRSI's "Epoxy Coating Plant Certification."
2. Dual-Coated Reinforcement: CRSI's "Epoxy Coating Plant Certification."

E. Material Test Reports: For the following, from a qualified testing agency:

1. Steel Reinforcement:

a. For reinforcement to be welded, mill test analysis for chemical composition and carbon equivalent of the steel in accordance with ASTM A706/A706M.

2. Mechanical splice couplers.

1.4 DELIVERY, STORAGE, AND HANDLING

A. Steel Reinforcement: Deliver, store, and handle steel reinforcement to prevent bending and damage and to avoid damaging coating on steel reinforcement.

1. Store reinforcement to avoid contact with earth.
2. Do not allow epoxy-coated reinforcement to be stored outdoors for more than 60 days without being stored under an opaque covering.
3. Do not allow dual-coated reinforcement to be stored outdoors for more than 60 days without being stored under an opaque covering.
4. Do not allow stainless steel reinforcement to come into contact with uncoated reinforcement.

PART 2 - PRODUCTS

2.1 PERFORMANCE REQUIREMENTS

2.2 STEEL REINFORCEMENT

A. Reinforcing Bars: ASTM A615/A615M, Grade 60, deformed.

B. Epoxy-Coated Reinforcing Bars:

1. Steel Bars: ASTM A615, Grade 60, deformed bars.

2.3 REINFORCEMENT ACCESSORIES

A. Joint Dowel Bars: ASTM A615/A615M, Grade 60, plain-steel bars, cut true to length with ends square and free of burrs.

B. Epoxy-Coated Joint Dowel Bars: ASTM A615/A615M, Grade 60, plain-steel bars, ASTM A775/A775M epoxy coated.

C. Bar Supports: Bolsters, chairs, spacers, and other devices for spacing, supporting, and fastening reinforcing bars and welded-wire reinforcement in place.

1. Manufacture bar supports from steel wire, plastic, or precast concrete in accordance with CRSI's "Manual of Standard Practice," of greater compressive strength than concrete and as follows:

    a. For concrete surfaces exposed to view, where legs of wire bar supports contact forms, use CRSI Class 1 plastic-protected steel wire, all-plastic bar supports, or CRSI Class 2 stainless steel bar supports.
    b. For epoxy-coated reinforcement, use CRSI Class 1A epoxy-coated or other dielectric-polymer-coated wire bar supports.

D. Mechanical Splice Couplers: Mechanical couplers may be sleeve-filler, sleeve-threaded, sleeve-swaged, or sleeve-wedged. Sleeve-wedge type couplers will not be permited on coated reinforcing.

E. Steel Tie Wire: ASTM A1064/A1064M, annealed steel, not less than 0.0508 inch (1.2908 mm) in diameter.

PART 3 - EXECUTION

3.1 PREPARATION

A. Protection of In-Place Conditions:

1. Do not cut or puncture vapor retarder.
2. Repair damage and reseal vapor retarder before placing concrete.

B. Clean reinforcement of loose rust and mill scale, earth, ice, and other foreign materials that reduce bond to concrete.

3.2 INSTALLATION OF STEEL REINFORCEMENT

A. Comply with CRSI's "Manual of Standard Practice" for placing and supporting reinforcement.

B. Accurately position, support, and secure reinforcement against displacement.

1. Locate and support reinforcement with bar supports to maintain minimum concrete cover.
2. Do not tack weld crossing reinforcing bars.

C. Preserve clearance between bars of not less than 1 inch (25 mm), not less than one bar diameter, or not less than 1-1/3 times size of large aggregate, whichever is greater.

D. Provide concrete coverage in accordance with ACI 318 (ACI 318M).

E. Set wire ties with ends directed into concrete, not toward exposed concrete surfaces.

F. Splices: Lap splices as indicated on Drawings.

1. Bars indicated to be continuous, and all vertical bars shall be lapped not less than 36 bar diameters at splices, or 24 inches (610 mm), whichever is greater.

2. Stagger splices in accordance with ACI 318 (ACI 318M).
3. Mechanical Splice Couplers: Install in accordance with manufacturer's instructions.

3.3 JOINTS

A. Construction Joints: Install so strength and appearance of concrete are not impaired, at locations indicated or as approved by Architect.

1. Place joints perpendicular to main reinforcement.
2. Continue reinforcement across construction joints unless otherwise indicated.
3. Do not continue reinforcement through sides of strip placements of floors and slabs.

B. Doweled Joints: Install dowel bars and support assemblies at joints where indicated. Lubricate or asphalt coat one-half of dowel length, to prevent concrete bonding to one side of joint.

3.4 INSTALLATION TOLERANCES

A. Comply with ACI 117 (ACI 117M).

3.5 FIELD QUALITY CONTROL

A. Special Inspections: Owner will engage a testing laboratory to perform field tests and inspections and prepare test reports.

B. Inspections:

1. Steel-reinforcement placement.
2. Steel-reinforcement mechanical splice couplers.
3. Steel-reinforcement welding.

END OF SECTION 032000

SECTION 03 30 00 - CAST-IN-PLACE CONCRETE

CONDITIONS OF THE CONTRACT AND DIVISION 1, as applicable, apply to this Section.

PART 1 - GENERAL

1.1 SECTION INCLUDES

A. Labor, materials, services and equipment required in conjunction with or properly incidental to placing of cast-in-place concrete slabs, building members, and MEP equipment pads as described herein or as shown on the Drawings, including but not limited to:
   1. Concrete mix designs.
   2. Assistance with Owner provided laboratory testing of concrete.
   3. Installation of items to be built-in formwork or embedded in concrete but furnished by other trades, including metal anchors, anchor slots, reglets, hangers, supports, ties, inserts, bolts, corner guards, and sleeves.
   4. Cast-in-place concrete, with formwork, under slab vapor barrier, reinforcing, accessories, appurtenances, finishing and curing required to complete concrete work.
   5. Grouting under structural steel base plates.
   6. Foundation for columns, walls, and slabs on grade.
   7. Super-structure for walls, columns, slabs, curbs, stairs, steps, equipment pads, walks, and pre-moulded expansions joints.

B. Examine the drawings for Plumbing, Mechanical, and Electrical work. These subcontractors will furnish and set sleeves or box forms required for openings. Contractor shall use care in placing reinforcement and pouring concrete so as not to displace such sleeves or boxes.
   1. All slots, chases, recesses, or openings indicated on the drawings, which are not formed by sleeves or boxes shall be provided in locations shown. When the work of other contractors is completed, the excess part of the openings shall be completely closed with concrete.

1.2 RELATED REQUIREMENTS

A. Division 1 Sections applicable to the Work of this Section.

1.3 RELATED SECTIONS

A. Section 01 45 23 - Testing and Inspection Laboratory Services

B. Section 02 32 00 - Geotechnical Report

C. Section 31 00 00 - Earthwork

D. Electrical and Mechanical Drawings and Specifications for sleeves, conduit, and other items embedded in concrete.

1.4 QUALITY ASSURANCE

A. Where standards or requirements of this Section are in conflict with those noted on the Contract Drawings, or the Building Code, the more stringent requirements shall govern. Bring all conflicts and discrepancies to the attention of the Architect and do not start work until such conflicts and discrepancies are clarified and corrected. Failure to do so will not relieve the Contractor from performing the Work correctly at no additional expense to the Owner.

B. Testing Laboratory Services:
1. Test results shall meet or exceed established standards. A technician from the Owner's Testing Laboratory must be present during all operations.

C. Evaluation and Acceptance:
1. Codes and Standards: The Work described in this Section, unless otherwise noted on the Drawings, or herein specified, shall be governed by the editions of the following codes or specifications approved by authorities having jurisdiction.
   a. American Association of State Highway and Transportation Officials (AASHTO)
      1) TP 23, "Proposed Standard Method of Test for Water Content of Freshly Mixed Concrete Using Microwave Oven Drying"

   b. American Concrete Institute (ACI)
      1) 211.1, "Standard Practice for Selecting Proportions for Normal, Heavyweight, and Mass Concrete"
      2) 214, "Recommended Practice for Evaluation of Strength Test Results of Concrete"
      3) 301, "Specifications for Structural Concrete for Buildings"
      4) 302, "Guide for Concrete Floor and Slab Construction"
      5) 304, "Recommended Practice for Measuring, Mixing, Transporting and Placing Concrete"
      6) 305, "Hot Weather Concreting"
      7) 306, "Cold Weather Concreting"
      8) 309, "Standard Practice for Consolidation of Concrete"
      9) 311, "ACI Manual of Concrete Inspection"
      10) 315, "Manual of Standard Practice for Detailing Reinforced Concrete Structures"
      11) 318, "Building Code Requirements for Reinforced Concrete"
      12) 347, "Recommended Practice for Concrete Formwork"
      13) 355.2, "Qualification of Post-Installed Mechanical Anchors in Concrete & Commentary"
      14) Keep one copy of "Manual of Concrete Practice" at job site at all times.

   c. American Society for Testing and Materials (ASTM)
      1) A36, Standard Specification for Carbon Structural Steel
      2) A108, Standard Specification for Steel Bars, Carbon, Cold-Finished, Standard Quality
      3) A123, Standard Specification for Zinc (Hot-Dip Galvanized) Coatings on Iron and Steel Products
      4) A185, Standard Specification for Steel Welded Wire Fabric, Plain, for Concrete Reinforcement
      5) A615, Standard Specification for Deformed and Plain Billet-Steel Bars for Concrete Reinforcement
      6) A704, Standard Specification for Welded Steel Plain Bar or Rod Mats for Concrete Reinforcement
      7) C33, Standard Specification for Concrete Aggregate
      8) C42, Standard Test Method for Obtaining and Testing Drilled Cores and Sawed Beams of Concrete
      9) C94, Standard Specification for Ready-Mix Concrete
      10) C136, Standard Method for Sieve Analysis of Fine and Coarse Aggregates
      11) C150, Standard Specification for Portland Cement
      12) C172, Standard Practice for Sampling Freshly Mixed Concrete
      13) C260, Standard Specification for Air-Entraining Admixtures
      14) C330, Standard Specification for Lightweight Aggregates for Structural Concrete

15) C494, Standard Specification for Chemical Admixtures for Concrete
16) C595, Standard Specification for Blended Hydraulic Cements
17) C881, Standard Specification for Epoxy-Resin-Base Bonding Systems for Concrete
18) C979, Standard Specification for Pigments for Integrally Colored Concrete
19) C1107, Standard Specification for Packaged Dry, Hydraulic-Cement Grout (Non-Shrink)
20) C1315, Standard Specification for Liquid Membrane-Forming Compounds Having Special Properties for Curing and Sealing Concrete
21) E96, Standard Test Methods for Water Vapor Transmission of Materials
22) E1643, Standard Practice for Installation of Water Vapor Retarders Used in Contact with Earth or Granular Fill under Concrete Slabs
23) E1745, Standard Specification for Water Vapor Retarders Used in Contact with Soil or Granular Fill under Concrete Slabs
24) F710, Standard Practice for Preparing Concrete Floors to Receive Resilient Flooring

d. American Welding Society (AWS)
1) D1.4 Structural Welding Code- Reinforcing Steel

e. Federal Specification (FS)
1) FF-S-325
2) QQ-Z-325C

f. Concrete Reinforcing Steel Institute (CRSI)
1) "Reinforced Concrete – A Manual of Standard Practice"
2) "Recommended Practice for Placing Reinforcing Bars"
3) "Recommended Practice for Placing Bar Supports"

D. Source Quality Control:
1. Concrete production facilities shall meet the requirement for certification by the National Ready Mixed Concrete Association. All ready mix concrete trucks proposed for use on the project shall meet the requirements of NRMCA, Certification of Ready Mix Concrete Production Facilities.
2. Concrete batchers shall be completely interlocked semi-automatic or automatic batchers, as defined by the Concrete Plant Manufacturers Bureau.
3. Concrete batchers shall have graphic, digital, or photographic recorders, which shall register both empty balance and total weight (or volume of water or admixture) of each batched material, time to the nearest minute, date, identification of batch, and numerical count of each batch. Copies of the record shall be furnished to the Inspection and Testing Laboratory.
4. The Inspection and Testing Laboratory shall provide concrete batch plant inspection as follows:
a. Provide a qualified inspector with necessary equipment and apparatus to inspect weighing and batching of controlled concrete at batch plant on a random basis, approximately once daily as the concrete is being placed on this project.
b. Make certain that materials and batch equipment used are in accordance with requirements of Specifications.
c. Check for adjustment in batch weights to compensate for variations in moisture content.
d. Submit promptly to Architect, certification of weights used in loads of acceptable concrete which has been batched during plant inspection time.

E. Concrete Mix Design Criteria:
   1. Design concrete mixes in accordance with ACI 318, Section 5.3, Proportioning on the basis of field experience and/or trial mixtures.
   2. Submit the proposed mix designs for each concrete mix type proposed.
   3. Determination of required average strength above specified strength shall be in accordance with ACI 318.
   4. If trial mixes are used as the basis for the proposed mix design, mold and cure test cylinders in accordance with ASTM C39. Do not place concrete on project until laboratory reports and results of confirmation cylinder tests have been evaluated by the Inspection and Testing Laboratory and results indicate that proposed mixes will develop required strengths.
   5. Inspection and Testing Laboratory shall furnish the Architect with a written evaluation of each proposed concrete mix design submitted by the Contractor.
   6. Check mix designs and revise if necessary wherever changes are made in aggregates or in surface water content of aggregate or workability of concrete. Water content shall be minimum to produce workable mix. The water content shall be verified in the field by use of the Microwave Test.

1.5 SUBMITTALS

A. Mix Designs: Submit proposed mix designs, including confirmation cylinder test results, in accordance with ACI 318, Section 5.3, Proportioning on the basis of field experience and/or trial mixtures. Submit mix designs to Architect/Engineer and Inspection and Testing Laboratory for evaluation a minimum of 14 days prior to placing concrete. Key requirements:
   1. Combined aggregate gradation.
   2. Proportions of cement, fine and coarse aggregates, and water.
   3. Type, color and dosage of integral coloring compounds, where applicable.
   4. Range of ambient temperature and humidity for which design is valid.
   5. Any special characteristics of mix which require precautions in mixing, placing, or finishing techniques to achieve finished product.

B. Complete test data for trial mixes or a complete summary of previous project test results for mix design based on standard deviation analysis must be included.

C. Provide duplicate delivery tickets for each load of ready-mix concrete delivered to site, in accordance with ASTM C94. Show batch weights on each ticket.

D. Provide mill test reports on an as-used basis for each type and brand of cementitious material used.

E. Provide certification from independent test laboratory indicating underslab vapor retarder compliance with specification and ASTM 1745 Class A requirements.

F. Provide product data for each accessories item specified but necessarily not listed above which are required for a complete installation, including, but not limited to reinforcing, chairs, admixtures, stains and color pigments, grouts, sealers, vapor retarders and barriers, water stops, epoxy adhesives, curing compounds and anchors.

G. Provide Shop Drawings for all reinforcing steel. Show bending diagrams, splicing and laps of rods, shapes, dimensions and details of bar reinforcement and accessories.

1.6 PRODUCT DELIVERY, STORAGE AND HANDLING

A. Mix and deliver concrete to project ready-mixed in accordance with ASTM C94. Mix concrete a minimum of 70 revolutions of transit mix drum at mixing speed. A minimum of 40 revolutions shall be at the production plant.

B. Schedule delivery so that continuity of any pour will not be interrupted for over 15 minutes.

C. Place concrete on site within 90 minutes after proportioning materials at batch plant.

D. Store bagged cement on platforms off ground. Protect stored cement against the elements. Handle and store fine and coarse aggregate separately in manner to prevent intrusion of foreign material or segregation of the material. Protect all reinforcement until used. Do not use any hardened cement.

E. Mild steel reinforcement at the time of placement of concrete shall be clean and free of all loose dirt, form oil, and other coatings affecting bond.

1.7 JOB CONDITIONS

A. Hot Weather Concreting:
   1. Follow ACI 301 and ACI 305.
   2. Provide water-reducing retarding admixture conforming to ASTM C494, Type D when necessary to retard initial set. The admixture shall be dispensed in accordance with manufacturer's recommendations.
   3. Maximum concrete temperature shall not exceed 95 degrees F at time of placement.
      a. Concrete with temperatures above 90 degrees F shall be placed only if a high range water reducer (superplasticizer) is added to the mix as directed by the Testing Laboratory to maintain the specified slump during placement.

B. Cold Weather Concreting: Protect concrete work from physical damage or reduced strength which could be caused by frost, freezing actions, or low temperatures.
   1. Follow ACI 301 and ACI 306.
   2. When ambient temperature at site is below 40 degrees F or is expected to fall to that temperature within ensuing 24 hours, heat water and/or aggregate prior to adding to mix so that temperature of concrete will be between 55 degrees F and 85 degrees F at time of placement.
   3. Maintain temperature of deposited concrete between 50 degrees F and 70 degrees F for minimum of seven (7) days after placing.
   4. Add the specified non-corrosive accelerator for all floor concrete placed at air temperatures below 50 degrees F.

C. Temperature Changes: Maintain changes in concrete temperature as uniformly as possible, but in no case exceed change of 5 degrees F per hour or 25 degrees F in any 24 hour period.

D. Combustion heaters shall not be used during the first 48 hours without precautions to prevent exposure of concrete and workmen to exhaust gasses containing carbon dioxide and/or carbon monoxide.

E. Admixtures intended to accelerate hardening of concrete or produce higher than normal strength at early periods will not be permitted unless approved by the Architect. The use of calcium chloride is specifically prohibited.

1.8 PRE-INSTALLATION CONFERENCE

Not Used

1.9 SEQUENCING/SCHEDULING

A. Coordinate Work of this Section with work of other Sections as required to properly execute the Work and as necessary to maintain satisfactory progress of the work of other Sections.

PART 2 - PRODUCTS

2.1 APPROVED MANUFACTURERS

A. Manufacturers named within this Section are approved for use on the Project for the product for which they are specified. Other manufacturers must have a minimum of five (5) years experience manufacturing the product specified and meet or exceed the specifications for that product. Substitution of products must be in accordance with the General Conditions, Supplementary Conditions, and Section 01 33 00, Submittals to be considered prior to proposal.

2.2 MATERIALS

A. Formwork:
1. General: Contractor may use any of the following formwork materials as long as material meets the following and will not stain, or impart any undesirable texture, i.e. wood grain, where such texture would be objectionable in an exposed location.
   a. Wood Forms:
      1) Plywood: PS 1, Douglas Fir or Spruce species.
      2) Medium Density Overlay (MDO): One (1) side grade; sound undamaged sheets with clean, true edges.
      3) Lumber: Southern Yellow Pine species; No. 2 grade, with grade stamp clearly visible.

   b. Pre-Fabricated Forms:
      1) Preformed Steel Forms: Minimum 16 gauge matched, tight fitting, stiffened to support weight of concrete without deflection detrimental to tolerances and appearance of finished surfaces.
      2) Glass Fiber Fabric Reinforced Plastic Forms: Matched, tight fitting, stiffened to support weight of concrete without deflection detrimental to tolerances and appearance of finished surfaces.

   c. Form Liner: Any material recommended by manufacturer to impart finish which will exhibit the finish or design characteristics, i.e. smooth, textured, ribbed, etc. detailed by the Architect for exposed locations as shown or required and capable of being stripped from complex designs without damaging the finish or design. Form liner shall be as manufactured by Symons Corporation, Greenstreak, Inc. or Architect approved equal.
   d. Self-expanding corkboard expansion joint fillers should conform to ASTM D1752 for exterior work. Joint fillers shall extend full depth of slab or joint and be of thickness and lengths indicated on drawings.

B. Metal Reinforcement:
1. Bars:
   a. General: Conform to ACI 315, latest edition.
   b. Comply with ASTM A615, Grade 60.
   c. Number 3 bars comply with ASTM A615, Grade 40

2. Welded Steel Wire Fabric (Mesh): Not permitted in structural concrete, unless approved by Structural Engineer

C. Concrete, General:
1. Ready-mixed concrete, ASTM C94
2. Comply with ACI 318.
3. Concrete must be approved by Architect through design mix and cylinder test of testing laboratory.

4. Unless approved otherwise by the Architect, use one (1) brand of cement throughout the work where finished surface will be exposed to view.
5. Strength: Refer to Paragraph 2.3, A.

D. Concrete Materials:
1. Cement:
a. Portland Cement, Type I or III, conforming to the requirements of ASTM C150.
b. Combined aggregate gradation for slabs and other designated concrete shall be 8 percent - 18 percent for large top size aggregates (1-1/2 in.) or 8 percent - 22 percent for smaller top size aggregates (1 in. or 3/4 in.) retained on each sieve below the top size and above the No. 100.

2. Fly ash: Not permitted.

E. Aggregate:
1. Fine Aggregate: ASTM C33; clean, hard, durable, uncoated, natural and manufactured sand, free of silt, loam or clay.
2. Coarse Aggregate: ASTM C33; hard, durable, uncoated, crushed stone; gradation in accordance with Size No. 467 for piers and concrete footings and Size No. 67 for all other concrete. Maximum aggregate size in accordance with ACI 318.
3. Grading shall be in accordance with "Standard Method for Fine Analysis of Sieve and Coarse Aggregates" (ASTM C136).

F. Water: ASTM C94, Paragraph 4.1.3; potable, clean and free from oil, acid and injurious amount of vegetable matter, alkalies, and other impurities.

G. Admixtures:
1. Cement-dispersing, water-reducing types. Admixtures shall conform to ASTM C494, Type A or D, and shall be used strictly in accordance with manufacturer's recommendations and as determined by the Inspection and Testing Laboratory. Admixture shall not discolor concrete or in any way affect the appearance of the concrete.
a. High-range water reducing admixture conforming to ASTM C494, Type F or G shall be used as required and shall be one (1) of the following or Architect approved equal:
1) Eucon 37 (Type F), Eucon 537 (Type G) by The Euclid Chemical Company
2) Rheobuild 1000 (Type F), Rheobuild 716 (Type G) by Master Builders
3) Sikament 300 (Type F), Sikament 86 (Type G) by Sika Chemical Corp.
4) WRDA-19 (Type F), Daracem 100 (Type G) by W.R. Grace

2. An air-entraining admixture conforming to ASTM C260 shall be used as required on the Drawings and shall be one (1) of the following or Architect approved equal:
a. Air-Mix or AEA-92 by The Euclid Chemical Company
b. Sika Aer by Sika Corporation
c. MB-VR or MB-AE by Master Builders

3. Prohibited Admixtures: Calcium chloride, thiocyanates or admixtures containing more than 0.05 percent chloride ions are not permitted.
4. Certification: Written conformance to the above-mentioned requirements and the chloride ion content of admixtures will be required from the admixture manufacturer prior to mix design review by the Architect/Engineer.

H. Non-Shrink Cement Grout:
1. The non-shrink grout shall be a factory pre-mixed grout and shall conform to ASTM C1107, "Standard Specification for Packaged Dry, Hydraulic-Cement Grout (Non-Shrink)." In addition, the grout manufacturer shall furnish test data from an independent laboratory

indicating that the grout when placed at a fluid consistency shall achieve 95 percent bearing under a 4 foot x 4 foot base plate. Provide one (1) of the following or Architect approved equal:

a. NS Grout by The Euclid Chemical Company
b. Five Star Grout by U.S. Grout Corp.
c. Horn Non-Corrosive Non-Shrink Grout by Tamms Industries
d. Duragrout by L & M Construction Chemicals, Inc.
e. Masterflow 713 by Master Builders
f. SikaGrout 212 by Sika Corp.
g. Sonogrout 10K by Sonneborn
h. 588 Grout by W. R. Meadows, Inc.
i. US SPEC GP Grout by US Mix Products Company

2. High Flow Grout: Where high fluidity and/or increased placing time is required, use high flow grout. The factory pre-mixed grout shall conform to ASTM C1107, "Standard Specification for Packages Dry, Hydraulic-Cement Grout (Non-Shrink)." In addition, the grout manufacturer shall furnish test data from an independent laboratory indicating that the grout when placed at a fluid consistency shall achieve 95 percent bearing under a 18 inch x 36 inch base plate. Provide one (1) of the following or Architect approved equal:
   a. Hi-Flow Grout by The Euclid Chemical Company
   b. Crystex by L & M Construction Chemicals, Inc.
   c. Masterflow 928 by Master Builders
   d. CG-86 Grout by W. R. Meadows, Inc.
   e. US SPEC MP Grout by US Mix Products Company

I. Non-Oxidizing Metallic Hardener: (For use at Loading Dock where shown)
   1. Non-Oxidizing Metallic Floor Hardener: The specified non-oxidizing metallic floor hardener shall be formulated, processed and packaged under stringent quality control at the manufacturer's owned and controlled factory. The hardener shall be a mixture of specially processed non-rusting aggregate, selected portland cement and necessary plasticizing agents. Product shall be Diamond-Plate by The Euclid Chemical Company or Architect approved equal.

J. Evaporation Retardant:
   1. Evaporation Retardant shall be a thin, continuous film which prevents rapid moisture loss from the concrete surface. For use when concrete operations must be performed in direct sun, wind, high temperatures, or for relative humidity. Products: Subject to compliance with requirements, provide one (1) of the following or Architect approved equal:
      a. Eucobar by The Euclid Chemical Company
      b. Confilm by Master Builders
      c. Evapre by W. R. Meadows, Inc.
      d. US SPEC Monofilm ER by US Mix Products Company.
      e. E-Con by L& M Construction Chemicals

K Sealer/Densifier: Provide "Euco Diamond Hard" by The Euclid Chemical Company, "Sealhard" by L&M Construction Chemicals, or equal by Master Builders, Sika Corp., Sonneborn, US SPEC, or Architect approved equal.

L. Chemical Hardener/Dustproofer: Provide "Surfhard" by The Euclid Chemical Company, "Chemhard" by L&M Construction Chemicals, or equal by Master Builders, Sika Corp., Sonneborn, US SPEC, or Architect approved equal.

M. Curing Compound: dissipating resin type, which chemically breaks down after approximately eight (8) weeks. Membrane forming compound shall meet ASTM C309, Types 1 and 1D Class B, water based, VOC/AIM Compliant. Provide "Kurez DR VOX" by The Euclid Chemical Company,

"Cure R" by L&M Construction Chemicals, "1100 Clear" by W. R. Meadows, Inc., US SPEC "Maxcure Resin Clear" by US Mix Products Company, or equal by Master Builders, Sika Corp., BASF, or Architect approved equal.

N. Curing and Sealing Compound: high solids acrylic copolymer emulsion blend. Membrane forming compound shall meet ASTM C1315, Type 1 Class B. Provide "Super Rez-Seal" by The Euclid Chemical Company, "Dress & Seal" by L&M Construction Chemicals, "VOCOMP 25 1315" by W. R. Meadows, Inc., US SPEC "CS-25-1315" by US Mix Products Company, or equal by Master Builders, Sika Corp., BASF, or Architect approved equal.

O. Epoxy Adhesive for rebar and threaded rod dowelling: Adhesive anchors shall have been tested and qualified for use in accordance with ICC-ES AC308 for cracked and uncracked concrete recognition. Size and location of anchors shall be as indicated on the drawings. Provide one (1) of the following or Structural approved equal:
1. Simpson Strong-Tie SET-XP (ICC-ES ESR-2508)
2. Hilti Corp. RE 500-SD (ICC-ES ESR-2322)
3. Powers Fasteners PE1000+ (ICC-ES ESR-2583)

P. Epoxy Adhesive to bond fresh concrete to hardened concrete and grout base plates: ASTM C881, two (2) component, 100 percent solids, 100 percent reactive compound suitable for use on dry or damp surfaces. Provide one (1) of the following or Architect approved equal:
1. Euco #452 Epoxy System or Euco #620 Epoxy System by The Euclid Chemical Company
2. Sikadur Hi-Mod by Sika Corp.
3. Rezi-Weld 1000 by W. R. Meadows, Inc.
4. US SPEC Maxibond 2500 by US Mix Products Company.
5. Epobond by L& M Construction Chemicals.

Q. Underslab Vapor Retarders and Barriers:
1. Vapor Retarder Membrane:
   a. Requirements:
      1) Class: ASTM E1745, Class A.
      2) Water Vapor Permeance: ASTM E96, 0.015 perms maximum.
      3) Tensile Strength: ASTM E154 (Section 9, Average), 45.0 pounds per inch, minimum.
      4) Puncture Resistance: ASTM D1709 (Method B), 2400 grams, minimum.

   b. Provide compatible seam taping and pipe boots or sealing mastic in accordance with manufacturer's requirements.
   c. Provide proof of compliance to Architect at time of delivery of materials.
   d. Provide one (1) of the following under entire slab, unless noted otherwise:
      1) Barrier Bac-Inc "VB-350"
      2) Insulation Solutions, Inc. "Viper II 15 mil"
      3) Raven Industries, Inc. "VaporBlock 15"
      4) Reef Industries, Inc. "Griffolyn 15 Mil Green"
      5) Stego Industries, LLC "Stego-Wrap 15-mil"
      6) Tex-Trude, "Xtreme 15 Mil"
      7) W. R. Meadows, Inc. "Perminator 15"

2. Vapor Barrier: Under Wood Floors at Gymnasiums, Stages, and Dance Floors, and at Auditorium Areas Below Finish Floor Level: Premoulded Membrane Vapor Seal with Plasmatic Core manufactured by W.R. Meadows, Inc., Hempshire, IL; or Architect approved equal.
3. Below Grade Waterproofing: Provide below grade waterproofing at vertical walls below grade and beneath elevator pit in accordance with Section 07 16 00.

R. Miscellaneous Structural Metals Associated with Structural Concrete:

1. Structural steel pieces, including miscellaneous structural metals placed in concrete, exposed to weather, in permanent contact with soil, or accessible to salt intrusion shall be hot dipped galvanized in accordance with ASTM A123.
2. Structural steel pieces embedded in concrete shall conform to ASTM A36, unless noted otherwise on the Drawings.
3. Welding of inserts, anchors and other steel pieces used in conjunction with structural concrete shall conform to AWS DI.4.
4. Welding of reinforcing steel used in conjunction with structural concrete shall conform to AWS DI.4.
5. Headed stud anchors shall conform to ASTM A108, minimum tensile strength 60,000 PSI.
6. Mechanical and screw anchors shall have been tested and qualified for use in Accordance with ACI 355.2 and ICC ES AC193 for cracked and uncracked concrete recognition. Size and location shall be as indicated on the Drawings. Provide one (1) of the following or Structural approved equal.
   a. Simpson Strong-Tie Strong-Bolt wedge anchor (ICC-ES ESR-1771)
   b. Simpson Strong-Tie Strong-Bolt 2 wedge anchor (ICC-ES ESR-3037)
   c. Simpson Strong-Tie Titen HD screw anchor (ICC-ES ESR-2713)
   d. Hilti Corp. Kwik-Bolt TZ wedge anchor (ICC-ES ESR-1917)
   e. Hilti Corp. Kwik HUS-EZ screw anchor (ICC-ES ESR-3037)
   f. Hilti Corp. HAD undercut anchor (ICC-ES ESR-1546)
   g. Powers Fasteners Power-Stud+ SD2 wedge anchor (ICC-ES ESR-2502)
   h. Powers Fasteners Wedge-Bolt+ screw anchor (ICC-ES ESR-2526)
   i. Powers Fasteners Atomic+ undercut anchor (ICC-ES ESR-3067)

S. Miscellaneous Materials and Accessories:
1. Form ties: Adjustable length and type which will not leave holes larger than 1 inch in diameter in face of concrete. Ties shall be such that when forms are removed, no metal will be within 1 inch of the finished concrete surface. The holes must be patched.
2. Nails, Spikes, Lag Bolts, Through Bolts, Anchorages, Fasteners: Sized as required, of sufficient strength and character to maintain formwork in place while placing concrete.
3. Form Release Agent: Colorless mineral oil which will not stain concrete, or absorb moisture.
4. Chairs and Spacers: Heavy-duty plastic-type sized to support all reinforcing steel to proper height. Use type with sand cushion pads where concrete is on grade. Provide chairs and spacers Series “B” by W.H.C. Products, Inc., E-Z Chair by Aztec Concrete Accessories, Inc., GTI Bar Chair by General Technologies, Inc., or Architect approved equal.

5. Waterstops:
   a. Ribbed flat 3/16 inch by six (6) inch with 1/8 inch ribs, rated for 75 foot of head pressure. Provide factory made corner fittings weld splices with thermostatically controlled heating iron. Style No. 782 by Greenstreak, Inc., or Architect approved equal.
   b. Contractor’s Material Option: Specially formulated preformed joint sealant that provides a lasting,, watertight bond to both fresh and cured concrete surfaces. Synko-Flex Preformed Plastic Adhesive Waterstop and Synko-Flex Primer manufactured by Synko-Flex Products, Division of Henry Company, Houston, Texas; (713) 671-9502 or Architect approved equal.
6. Carton Void Forms: If shown or required, shall be wax coated corrugated paper material, rectangular in shape and same width as the grade beams, with 1/8 inch thick tempered hardboard for top plane. Provide void forms as required (i.e. with curves, radial) that have vertical supported edges adjacent to all drilled piers, in order to prevent damage to the interior supporting network caused by field cutting.
7. Soils retainers: If shown or required, shall be composed of lightweight, plastic material that is not adversely affected by moisture. They must be flexible, impact resistant and must be able to resist lateral loads applied by the soils. Retainers shall extend both 6” above and below the top and bottom of void forms.

8. Corners: Chamfer, wood strip type; one (1) inch x one (1) inch size; maximum possible lengths.
9. Dovetail Anchor Slot: Galvanized steel, 22 gauge thick, foam filled, release tape sealed slots, anchors for securing to concrete formwork.
10. Flashing Reglets: Galvanized steel, 22 gauge thick, longest possible lengths, with alignment splines for joints, foam filled, release tape sealed slots, anchors for securing to concrete formwork.
11. Bonding Agent: Acrylic latex emulsion type as recommended for bonding new concrete to old concrete.
12. Integral Color Pigment (If shown or required): Mineral oxide, lightfast, lime-proof, water-resistant type conforming to ASTM C979. Color(s) shall be as selected by Architect from manufacturer's standard color line. Provide one (1) of the following or Architect approved equal:
    a. ChemSystems, Inc.
    b. Davis Colors
    c. New Riverside Ochre Co., Inc.
    d. L.M. Scofield Company
13. Color Stain (If shown or required): A chemically reactive stain, designed for adding variegated color to new or old concrete. Color(s) shall be as selected by Architect from manufacturer's standard color line. Provide Lithochrome Chemstain by L.M. Scofield Company or Architect approved equal.
14. Joint Sealants: Refer to Section 07 92 00, Building Sealants

2.3 CONCRETE MIXES

A. Strength: Concrete is classified and specified by ultimate compressive strength (f c) at the age of 28 days. Unless indicated otherwise on the Drawings, strengths shall be as follows:
    1. All concrete including grade beams, footings, slabs, and pads: 5 sack/3,000 psi/28 days.
    2. Strength recommendations on Structural Drawings supersede when they are greater than specified here.

B. Interior slabs subjected to vehicular traffic: This concrete shall have a maximum W/cm of 0.48 and maximum air content of 3 percent. No air-entraining admixture shall be added to this mix.

C. Concrete permanently exposed to freezing and thawing shall conform to Chapter 4 – Durability Requirements of ACI 318. W/cm and air content ratios shall coincide with its respective Exposure Class.

D. Proportions: Proportions of cement, aggregate, admixture and water to attain required plasticity and compressive strength shall be in accordance with ACI 318, Section 5.3, Proportioning on the basis of field experience and/or trial mixtures. Do not make changes in proportions without submitting proposed changes to Inspection and Testing Laboratory for evaluation.
    1. Trial mixtures having proportions and consistencies suitable for the work shall be made based on ACI 211. 1, using at least three (3) different water-cement ratios which will produce a range of strengths encompassing those required for this project.
    2. Trial mixes shall be designed to produce a slump within 3/4 inch of the maximum permitted, and for air-entrained concrete, within 0.5 percent of maximum allowable air content. The temperature of concrete used in trial batches shall not exceed the maximum temperature specified.
    3. For each water-cement ratio, at least three confirmation compression test cylinders for each test age shall be made and cured in accordance with ASTM C192. Confirmation cylinders shall be tested at seven (7) and 28 days in accordance with ASTM C39.
    4. From the results of the 28 day confirmation tests, a curve shall be plotted showing the relationship between the water-cement ratio and compressive strengths. From this curve,

the water-cement ratio to be used in the concrete shall be selected to produce the average strength required.

5. The cement content and mixture proportions to be used shall be such that this water-cement ratio is not exceeded when slump is the maximum permitted. Control in the field shall be based upon maintenance of proper cement, water content, slump and air content.
6. Mix designs furnished by the concrete supplier, shall be based on the standard deviation analysis of previous test records meeting the requirements of Section 5.3.1 - Standard deviation of ACI 318. These mixes will be accepted in lieu of trial mixtures described in paragraphs above.
   a. Temperature of concrete in test data shall be within 5 degrees F of maximum temperature specified for this project.
   b. Strengths indicated in test data shall be in accordance with ACI 318, Section 5.3.
   c. The specified strength of concrete used in supporting test data shall vary no more than 500 PSI plus or minus from that specified for this project.
   d. The Testing Laboratory shall keep a strength and standard deviation record of all concrete for the duration of the project as specified in this section.

PART 3 - EXECUTION

3.1 GENERAL

A. Inserts: Give the various trades and subcontractors ample notification and opportunity to furnish all anchors, nailers, pipes, conduits, boxes, inserts, thimbles, sleeves, frame vents, wires, supports, or other items required to be built into the concrete by the provisions of the Drawings or of the Specification governing the work of such trades and subcontractors, or as it may be necessary for the proper execution of their work. Obtain suitable templates or instructions for the installation of such items which are required to be placed in the forms.

B. Install under-slab vapor retarder as instructed by manufacturer in accordance with ASTM E1643. Penetrations shall be sealed to maintain integrity of barrier. Tape around all openings and seal all penetrations as instructed by the barrier manufacturer. Grade stakes shall not be driven through the vapor barrier. Avoid punctures during reinforcement and concrete placement.

C. Slump:
   1. Concrete not containing a high range water reducing admixture shall not be placed when its plasticity, as measured by slump test, is outside the following limits:
      a. Footings: 6 inches maximum, 4 inches minimum
      b. All other Structural Concrete: 5 inches maximum, 3 inches minimum
      c. Pavement: 4 inches maximum. Coordinate slump with requirements in Section 32 13 13, Concrete Paving.
      d. Slump drop not to exceed 2 inches when pumped.
   2. Concrete containing a high range water reducing admixture shall not be placed when its plasticity, as measured by slump test, is outside the following limits:
      a. Prior to addition high range water reducer: 3 inches maximum, 2 inches minimum.
      b. After addition of high range water reducer: 9 inches maximum.

D. Classes of Concrete and Usage: Concrete of the several classes of concrete required shall have the characteristics shown on the Drawings.

E. Mixing:
   1. Transit-mixed concrete conforming to the requirements of ASTM C94 and ACI 304 shall be used in lieu of concrete mixed at the job site. Concrete shall not be transported or

used in any case after a period in excess of 90 minutes has elapsed after the introduction of water into the mixer.

2. Indiscriminate addition of water to increase slump of concrete is prohibited. Add water only at the direction of the Testing Laboratory. No water shall be added which increases the water cement ratio of the concrete in excess of the water cement ratio indicated on the approved mix design. At the direction of the Inspection and Testing Laboratory the addition of a high range water reducing admixture may be used to retemper concrete.
3. The agency supplying transit-mixed concrete shall have a plant of sufficient capacity and adequate transportation facilities, to assure continuous delivery at the rate required. The frequency of deliveries to the site of the work must be such as to provide for placing the concrete continuously throughout any one (1) pour.

F. Conveying Concrete: Convey concrete from the mixer to the place of final deposit by methods which will prevent the separation or loss of the ingredients. Concrete to be conveyed by pumping shall be submitted to the Inspection and Testing Laboratory for evaluation for each class of concrete specified before being used. Test cylinders for pumped concrete shall be taken at the discharge end of the pumping equipment.

G. Equipment for chuting, pumping, and pneumatically conveying concrete shall be of such size and design as to assure a practically continuous flow of concrete at the delivery end without separation of the materials. The use of gravity-flow or aluminum chutes or conveyors for transporting concrete horizontally will not be permitted.

H. Miscellaneous Materials and Accessories: if not specifically noted, install all materials and accessories per manufacturer's instructions as if noted here in full.

I. Extend underslab vapor barrier continuously under entire slab, slab turn downs, vertical face of grade beams and footings to completely protect concrete adjacent to earth. Overlap joints and install seam tape and pipe boots, and seal penetrations as instructed by manufacturer.

J. Bars shall be supported on chairs or spacers on metal hangers, accurately placed and securely fastened to steel reinforcement in place. No wood or clay brick will be permitted inside forms.

K. All reinforcing shall be set in place, spaced, and rigidly and securely tied or wired at all splices and at all crossing points and intersections.

L. Minimum center to center distance between parallel bars shall be in accordance with the details on the drawings. Where not shown, the clear spacing shall be 1-1/2 times the bar diameter but never less than 1-1/2 inches.

M. Lap of splices where shown and noted on the drawings shall be a minimum of 32 bar diameters but never less than 12 inches.

N. Except where shown on the drawings, minimum concrete coverage for reinforcing steel shall be:
1. 3 inches…where concrete is placed against earth
2. 1-1/2 inches…over column ties
3. 1-1/2 inches…for #5 and smaller bars in formed walls
4. 2 inches…for all bars larger than #5 in formed walls
5. 1 inch…for #11 and smaller bars in suspended slabs
6. 1-1/2 inches…for all bars larger than #11 in suspended slabs

3.2 CONCRETE CONTROL AND TESTING

A. Inspection and Testing laboratory services shall be in accordance with Section 01 45 23, Testing and Inspecting Services.

B. Except as noted below, all inspection and testing related to concrete placement, including reinforcing and embedded items, shall be the responsibility of the Owner. The Owner will directly engage the services of a qualified Testing and Inspection Laboratory, however, the Contractor shall provide access to the Owner's consultant, and, if required, the Contractor shall provide patching and repairing of surfaces removed to facilitate testing and inspection.

C. Should the strength of concrete fall below the minimum, then additional tests, including load tests, may be required. These tests, if required, shall be made at the Contractor's expense and shall be in accordance with ASTM C42 and ACI 318. If tests do not meet the applicable requirements, then the structure, or any part of the structure, shall be removed and replaced at the Contractor's expense.

D. Any concrete testing requested by the Contractor for early formwork or shoring removal, etc., shall be at the Contractor's expense.

E. Do not permit placement of concrete having a measured slump outside limits given on Drawings or Specifications, except when approved by Architect/Engineer.

3.3 PLACING CONCRETE

A. Place concrete in reasonably uniform layers, approximately horizontal, and not more than 18 inches deep, exercising care to avoid vertical joints or inclined planes. The piling up of concrete in the forms in such a manner as to cause the separation or loss of any of its ingredients will not be permitted. Concrete which has partially set or hardened shall not, under any circumstances, be deposited in the work. All slabs shall be placed for full thickness in one operation without change in proportions, screeded to proper elevation, and floated. Dusting of surfaces with cement is prohibited.

B. Place concrete in the forms as nearly in its final position as is practical to avoid rehandling. Exercise special care to prevent splashing the forms or reinforcement with concrete. Remove any hardened or partially hardened concrete which has accumulated on the forms or reinforcement before the work proceeds. Do not place concrete on previously deposited concrete which has hardened sufficiently to cause the formation of seams or planes of weakness within the respective member of section, except as hereinafter specified.

C. Do not permit concrete to drop freely any distance greater than five (5) feet. Where longer drops are necessary, use a chute, tremie, or other acceptable conveyance to assist the concrete into place without separation. Do not pour directly into any excavations where water is standing.

D. Vibration: As soon as concrete is deposited, thoroughly agitate same by means of mechanical vibrators and suitable hand tools, so manipulated as to work the mixture well into all parts and corners of the forms, and entirely around the reinforcement and inserts. Mechanical vibrators shall maintain frequencies in accordance with the recommendations of ACI 309. Table 5.1.4, and shall be operated by competent workmen. Over vibrating and use of vibrators to transport concrete within forms shall not be allowed. A spare vibrator shall be kept on the job site during all concrete placing operations.

E. Bonding: Before depositing any new concrete on or against previously deposited concrete which has partially or entirely set, the surface of the latter shall be thoroughly roughened and cleaned of all foreign matter, scum and laitance. The specified or an Architect approved bonding agent or epoxy adhesive shall be used.

F. Construction Joints: Except as otherwise specifically indicated on the Drawings, each concrete member shall be considered as a single unit of operation, and all concrete for the same shall be placed continuously in order that such unit will be monolithic in construction. Should construction joints prove to be absolutely unavoidable, same shall be located at or near the midpoints of spans.

Additional construction joints shall not be made under any circumstances without prior review by the Architect.

Protect all freshly placed concrete from washing by rain, flowing water, etc. Do not allow the concrete to dry out from the time it is deposited in the forms until the expiration of the curing period.

Imperfect or damaged work, or any material damaged or determined to be defective before final completion and acceptance of the entire job, shall be satisfactorily replaced at the Contractor's expense and shall be in conformity with all of the requirements of the Contract Documents. Removal and replacement of concrete work shall be done in such a manner as not to impair the appearance or strength of the structure in any way.

G. Cleaning: Upon completion of the work, all forms, equipment, protective coverings and any rubbish resulting therefrom shall be removed from the premises. Finished concrete surfaces shall be left in clean and perfect condition, satisfactory to the Owner. Sweep with an ordinary broom and remove all mortar, concrete droppings, loose dirt, mud, etc.

3.4 FLOOR AND SLAB FINISHES

A. Scratch Finish: Apply scratch finish to monolithic slab surfaces that are to receive concrete floor topping or mortar setting beds for tile, portland cement terrazzo, and other bonded applied cementitious finish flooring material, and as otherwise indicated.
   1. After placing slabs, surface shall be leveled to an F_F 15 - F_L 13 tolerance. Slope surfaces uniformly to drains where required. After leveling, roughen surface before final set, with stiff brushes, brooms or rakes.

B. Float Finish: Apply float finish to monolithic slab surfaces to receive trowel finish and other finishes as hereinafter specified, and slab surfaces which are to be covered with membrane or elastic waterproofing, or sand-bed terrazzo, and as otherwise indicated.
   1. After screeding, consolidating, and leveling concrete slabs, do not work surface until ready for floating. Begin floating when surface water has disappeared or when concrete has stiffened sufficiently to permit operation of power-driven floats, or both. Consolidate surface with power-driven floats, or by hand-floating if area is small or inaccessible to power units. Cut down high spots and fill low spots. Uniformly slope surfaces to drains. Immediately after leveling, refloat surface to a uniform, smooth, granular texture. Surface shall achieve an F_F 20 - F_L 17 tolerance.

C. Trowel Finish: Apply trowel finish to monolithic slab surfaces to be exposed-to-view, and slab surfaces to be covered with resilient flooring, carpet, ceramic or quarry tile, paint, or other thin film finish coating system.
   1. After floating, begin first trowel finish operation using a power-driven trowel. Begin final troweling when surface produces a ringing sound as trowel is moved over surface. Consolidate concrete surface by final troweling operation, free of trowel marks, uniform in texture and appearance and to a FF35/ FL30 tolerance (FL17 for elevated slabs). Grind smooth surface defects, which would telegraph through applied floor covering system.

D. Non-Slip Broom Finish: Apply non-slip broom finish to exterior concrete platforms, steps and ramps, exterior dugout slabs, and elsewhere as indicated.
   1. Immediately after float finishing, slightly roughen concrete surface by brooming with fiber bristle broom perpendicular to main traffic route. Coordinate required final finish with Architect before application. A sample panel is required.

E. Liquid Densifier/Sealer: Apply liquid densifier/sealer on exposed interior floors subject to vehicular abrasion and as indicated on the Drawings. Compound shall be mechanically scrubbed into the

surface in strict accordance with the directions of the manufacturer and just prior to completion of construction.

F. Non-Oxidizing Metallic Floor Hardener: All slabs, in the loading dock area, or other areas noted on the Drawings, shall receive an application of the non-oxidizing, metallic floor hardener applied in accordance with manufacturer's instructions to produce a smooth dense finish.

3.5 NON-SHRINK GROUT

A. Refer to Structural Drawings for column base plates and other structural grouting requirements.

B. Non-shrink grout shall be mixed only in such quantities as are needed for immediate use. No retempering shall be permitted and materials which have been mixed for a period exceeding 30 minutes shall in no case be used upon any portion of the work.

C. Where high fluidity and/or increased placing time is required use the specified high flow grout. This grout shall be used for all base plates larger than ten (10) square feet.

D. For every 1/3 cubic yards of grout placed, grout strength shall be tested with a set of cubes as follows:
   1. A set of cubes shall consist of three cubes to be tested seven (7) days, and three (3) cubes to be tested at 28 days.
   2. Test cubes shall be made and tested in accordance with ASTM C1107, Section 12.5, with the exception that the grout should be restrained from expansion by a top plate.

3.6 CURING AND PROTECTION

A. General: Protect freshly placed concrete from premature drying and excessive cold or hot temperatures. All concrete shall be kept continuously moist and above 50 degrees F for seven days. When high early strength concrete is used this temperature requirement may be lowered to three (3) days.

B. Curing Methods: Perform curing of concrete by curing and sealing compound, by moist curing, by moisture-retaining cover curing, and by combinations thereof, as herein specified.
   1. Provide specified curing compound to exposed interior slabs. This curing compound must be dissipating or easily removed in the cleaning process prior to the application of any liquid densifier/ sealer.

3.7 DEFECTIVE WORK

A. Imperfect or damaged work, or any material damaged or determined to be defective before final completion and acceptance of the entire job, shall be satisfactorily replaced at the Contractor's expense and shall be in conformity with all of the requirements of the Contract Documents. Removal and replacement of concrete work shall be done in such a manner as not to impair the appearance or strength of the structure in any way.

3.8 CLEANING

A. Upon completion of the work, all forms, equipment, protective coverings and any rubbish resulting therefrom, shall be removed from the premises. Finished concrete surfaces shall be left in clean and perfect condition, satisfactory to the Owner. Sweep with an ordinary broom and remove all mortar, concrete droppings, loose dirt, mud, etc.

3.9 REPAIR OF DEFECTIVE AREAS

A. With prior approval of the Architect/Engineer, as to method and procedure, all repairs of defective areas shall conform to ACI 301, Section 5.3.7, using the polymer repair mortars and/or epoxy adhesives furnished by The Euclid Chemical Company, Sika Chemical Corp., or Architect approved equal.

3.10 FIELD QUALITY CONTROL AND TESTING

A. Inspection and Testing Laboratory services shall be in accordance with Section 01 45 23, Testing and Inspecting Services.

END OF SECTION 03 30 00

SECTION 042000 - UNIT MASONRY

PART 1 - GENERAL

1.1 SECTION REQUIREMENTS

A. Submittals:

1. Product Data: submit data for each type of masonry units, wall ties, anchors and other materials and cleaning solutions.
2. Material Certificates: For each type of product indicated. Include statements of material properties indicating compliance with requirements.

PART 2 - PRODUCTS

2.1 UNIT MASONRY

A. Comply with ACI 530.1/ASCE 6/TMS 602.

2.2 MASONRY UNITS

A. Concrete Masonry Units: ASTM C 90; Density Classification, Normal Weight.
1. Size: nominal modular size of 16 inches long x 8 inches high x thickness indicated.
2. Furnish special units for bond beams and lintels.
3. Furnish molded bullnose corners at unites exposed to interior of building. Field formed bullnose is not acceptable

4. Special shapes for lintels, corners, jambs, sash, control joints, and other special conditions.
5. **Bullnose** units for outside corners on all interior walls, except at walls with tile, unless otherwise indicated.

B. Concrete Lintels: Precast units matching concrete masonry units and with reinforcing bars indicated or required to support loads indicated.

2.3 MORTAR AND GROUT

A. Mortar: ASTM C 270, proportion specification.

1. Use **portland cement-lime** mortar, ASTM C 150, Type 1 , gray or white color as required to produce mortar color indicated.
2. Do not use calcium chloride in mortar.
3. Masonry Cement shall not be used.
4. Mortar aggregate: ASTM C 144, Standard masonry type.

5. Hydrated Lime: ASTM C206, Type S
6. Water Clean and potable.
7. Calcium chloride is not permitted.

B. Grout: ASTM C 476 with a slump of 8 to 11 inches (200 to 280 mm).

2.4 REINFORCEMENT, TIES, AND ANCHORS

A. Steel Reinforcing Bars: ASTM A 615/A 615M or ASTM A 996/A 996M, Grade 60 (Grade 420).

B. Joint Reinforcement: ASTM A 951.

1. Coating: **Mill galvanized at interior walls and hot-dip galvanized at exterior walls**.
2. Wire Size for Side Rods: **0.187-inch (4.76-mm)** diameter.
3. Wire Size for Cross Rods: **0.187-inch (4.76-mm)** diameter.
4. Wire Size for Veneer Ties: **0.187-inch (4.76-mm)** diameter.
5. For single-wythe masonry, provide either ladder design or truss design.
6. For multiwythe masonry, provide **ladder design with three** side rods.
7. Products:
    a. Dayton Superior Corporation, Dur-O-Wal Division.
    b. Heckmann Building Products Inc.
    c. Hohmann & Barnard, Inc.
    d. Wire-Bond.

2.5 MISCELLANEOUS MASONRY ACCESSORIES

A. Compressible Filler: Premolded strips complying with ASTM D 1056, Grade 2A1.

B. Preformed Control-Joint Gaskets: Designed to fit standard sash block and to maintain lateral stability in masonry wall; made from styrene-butadiene rubber or PVC.

1. Products:
    a. Advanced Building Products Inc.
    b. Archovations, Inc.
    c. Dayton Superior Corporation, Dur-O-Wal Division
    d. Mortar Net USA, Ltd.

C. Proprietary Acidic Masonry Cleaner: Product expressly approved for intended use by cleaner manufacturer and manufacturer of masonry units.

1. Manufacturers:
    a. Diedrich Technologies, Inc.
    b. EaCo Chem, Inc.
    c. ProSoCo, Inc.

PART 3 - EXECUTION

3.1 INSTALLATION, GENERAL

A. Cut masonry units with saw. Install with cut surfaces and, where possible, cut edges concealed.

B. Mix units for exposed unit masonry from several pallets or cubes as they are placed to produce uniform blend of colors and textures.

C. Matching Existing Masonry: Match coursing, bonding, color, and texture of existing masonry.

D. Stopping and Resuming Work: Rack back units; do not tooth.

E. Fill cores in hollow concrete masonry units with grout 24 inches (600 mm) under bearing plates, beams, lintels, posts, and similar items unless otherwise indicated.

F. Build non-load-bearing interior partitions full height and install compressible filler in joint between top of partition and underside of structure above.

G. Fill metal door jamb frames solid with mortar. Build in anchors.

H. Lay CMU in running one-half (1/2) bond pattern, unless otherwise noted.

I. All mortar joints to be of consistent size.

J. Tool exposed joints slightly concave when thumbprint hard unless otherwise indicated.

K. Keep cavities clean of mortar droppings and other materials during construction.

3.2 LINTELS

A. Install lintels where indicated.

B. Minimum bearing of 8 inches (200 mm) at each jamb unless otherwise indicated.

3.3 PARGING

A. Parge masonry walls, where indicated, in two uniform coats with a steel-trowel finish. Form a wash at top of parging and a cove at bottom. Damp cure parging for at least 24 hours.

3.4 FIELD QUALITY CONTROL

A. Testing and Inspecting: Owner will engage special inspectors to perform tests and inspections required by authorities having jurisdiction.

1. Inspections: **Level 1** special inspections according to the IBC.
2. Place grout only after inspectors have verified compliance of grout spaces and of grades, sizes, and locations of reinforcement.
3. Do not use chipped or cracked concrete masonry units (CMU).

3.5 CLEANING

A. Clean masonry as work progresses. Remove mortar fins and smears before tooling joints.

B. Final Cleaning: After mortar is thoroughly cured, clean exposed masonry.

1. Wet wall surfaces with water before applying acidic cleaner, then remove cleaner promptly by rinsing thoroughly with clear water.
2. Clean masonry with a proprietary acidic cleaner applied according to manufacturer's written instructions.

END OF SECTION 042000

Eldorado Stone, LLC
1370 Grand Ave., Bldg., B
San Marcos, CA 92069
Tel: (760) 736-3232
Fax: (760) 736-8890
e-mail: customerservice@westlake.net
website: www.eldoradostone.com

SECTION 04 73 00

STONE CLADDING - MANUFACTURED MASONRY VENEER

PART 1 - GENERAL

1.01 SUMMARY

A. Section Includes: Portland cement based manufactured stone veneer and trim.

B. Related Sections:
1. 061600 - Sheathing.

1.02 REFERENCES

A. American National Standards Institute (ANSI):
1. ANSI A118.4 Specifications for Latex-Portland Cement Mortar.

B. American Society for Testing and Materials (ASTM):
1. ASTM C 39 – Standard Test Method for Compressive Strength of Cylindrical Concrete Specimens.
2. ASTM C 67 – Standard Test Methods for Sampling and Testing Brick and Structural Clay Tile.
3. ASTM C 144 – Standard Specification for Aggregate for Masonry Mortar.
4. ASTM C 177 – Standard Test Method for Steady-State Head Flux Measurements and Thermal Transmission Properties by Means of the Guarded-Hot-Plate Apparatus.
5. ASTM C 207 – Standard Specification for Hydrated Lime for Masonry Purposes.
6. ASTM C 270 – Standard Specification for Mortar for Unit Masonry.
7. ASTM C 482 – Standard Test Method for Bond Strength of Ceramic Tile to Portland Cement.
8. ASTM C 567 – Standard Test Method for Determining Density of Structural Lightweight Concrete.
9. ASTM C 847 – Standard Specification for Metal Lath.
10. ASTM C 932 – Standard Specification for Surface-Applied Bonding Compounds for Exterior Plastering.
11. ASTM C 979 – Standard Specification for Pigments for Integrally Colored Concrete.
12. ASTM C 1032 – Standard Specification for Woven Wire Plaster Base.
13. ASTM C 1059 – Standard Specification for Latex Agents for Bonding Fresh To Hardened Concrete.
14. ASTM D 226 – Standard Specification for Asphalt-Saturated Organic Felt Used in Roofing and Waterproofing.

15. ASTM C1063 –Standard Specification for Installation of Lathing and Furring to Receive Interior and Exterior Portland Cement-Based Plaster
16. ASTM C1329 Standard specification for Portland cement
17. ASTM C578 – Standard Specification for Rigid, Cellular Polystyrene Thermal Insulation
18. ASTM C1289 – Standard Specification for Faced Rigid Cellular Polyisocyanurate Thermal Insulation Board
19. ASTM E2556/E2556M – Standard Specification for Vapor Permeable Flexible Sheet Water-Resistive Barriers Intended for Mechanical Attachment

C. Other Standards:
   1. UBC Standard No. 14-1, Kraft Waterproof Building Paper
   2. ICC AC38 Acceptance Criteria for Water Resistive Barriers
   3. UU-B-790 Building Paper, Vegetable Based, Kraft , waterproofed, water repellent and fireproof

D. International Code Council (ICC):
   1. ESR Report.

E. Underwriter's Laboratory (UL): Building Materials Directory.

1.03 SUBMITTALS

A. Reference Section 01 33 00–Submittal Procedures; submit following items:
   1. Product Data.
   2. Samples:
      a. Standard sample board consisting of small-scale pieces of veneer units showing full range of textures and colors.
   3. Verification Samples: Following initial sample selection submit “laid-up” sample board using the selected stone and mortar materials and showing the full range of colors expected in the finished Work; minimum sample size: 3 by 3 feet (1 by 1 m).
   4. Quality Assurance/Control Submittals:
      a. Qualifications:
         1) Proof of manufacturer qualifications.
         2) Proof of installer qualifications.
      b. Regulatory Requirements: Evaluation reports.
      c. Veneer manufacturer’s installation instructions.
      d. Installation instructions for other materials.

B. Closeout Submittals: Reference Section 01 70 00–Closeout Submittals; submit following items:
   1. Maintenance Instructions.
   2. Special Warranties.

1.04 QUALITY ASSURANCE

A. Qualifications:
   1. Manufacturer Qualifications: Eldorado Stone, LLC.
   2. Installer Qualifications: Experienced mason familiar with installation procedures and related local, state and federal codes masonry.

B. Field Sample:

1. Prepare 4 by 4 foot (1200 by 1200 mm) sample at a location on the structure as selected by the Architect. Use approved selection sample materials and colors.
2. Obtain Architect's approval.
3. Protect and retain sample as a basis for approval of completed manufactured stone work. Approved sample may be incorporated into completed work.

1.05 DELIVERY, STORAGE, AND HANDLING

A. Follow manufacturer's instructions.

1.06 PROJECT/SITE CONDITIONS

A. Environmental Requirements: When air temperature is 40 degrees F (4.5 degrees C) or below, consult local building code for Cold-Weather Construction requirements.

1.07 WARRANTY

A. Special Warranty: Manufacturer's standard warranty coverage against defects in materials when installed in accordance with manufacturer's installation instructions.

PART 2 - PRODUCTS

2.01 MANUFACTURER

A. Eldorado Stone, LLC
1370 Grand Ave., Bldg. B
San Marcos, CA 92069

Tel: (800) 925-1491
Fax: (760) 736-3840
E-Mail: customerservice@westlake.net
Website: www.eldoradostone.com

B. Product: Rough Cut Falling Springs veneer types as shown on Drawings.

C. Substitutions: None Allowed.

2.02 MATERIALS

A. Stone Veneer:
1. Profile: Rough Cut profile indicated on Drawings. Include matching corner pieces.
2. Stone Accents: Color and Texture as indicated on Drawings and/or as approved by Architect.

B. Veneer Unit properties: Precast veneer units consisting of portland cement, lightweight aggregates, and mineral oxide pigments.
1. Compressive Strength: ASTM C 192 and ASTM C 39, 5 sample average: greater than 1,800 psi (12.4MPa).
2. Shear Bond: ASTM C 482: 50 psi (345kPa), minimum.
3. Freeze-Thaw Test: ASTM C 67: Less than 3 percent weight loss and no disintegration.
4. Thermal Resistance: ASTM C 177: 0.473 at 1.387 inches thick
5. Weight per square foot: 2012 IBC and 2012 IRC, ASTM C1670, 15 pounds, saturated.

C. Weather Barrier: [ASTM D 226, Type 1, No. 15, non-perforated asphalt-saturated felt paper] [UBC Standard 14-1, kraft waterproof building paper] or [UBC Standard No. 14-1, Kraft Waterproof Building Paper] or [ICC AC-38, synthetic house wrap]

D. Reinforcing: [ASTM C 847, 2.5lb/yd^2 (1.4kg/m^2) galvanized expanded metal lath] [ASTM C 847, 3.4lb (1.8 kg/m^2) galvanized 3/8" rib lath] [ASTM C 1032, 17 gauge (1.3 mm) woven wire mesh] complying with code agency requirements for the type of substrate over which stone veneer is installed.

E. Mortar:
   1. Cement: Portland cement complying with ASTM C 1329.
   2. Lime: ASTM C 207.
   3. Sand: ASTM C 144, natural or manufactured sand.
   4. Color Pigment: ASTM C 979, mineral oxide pigments.
   5. Water: Potable.
   6. Pre-Packaged Latex-Portland Cement Mortar: ANSI A118.4.

F. Bonding Agent: Exterior integral bonding agent meeting [ASTM C 932] [ASTM C 1059 Type II]

G. Water Repellent: Water based silane or siloxane masonry water repellent

2.03 MORTAR MIXES

A. Standard Installation (Grouted Joints):
   1. Mix mortar in accordance with ASTM C 270,
   2. Polymer modified mortar complying with ANSI A118.4
      a. Add color pigment in grout joint mortar in accordance with pigment manufacturer's instructions not to exceed 10% by weight of cement.

PART 3 - EXECUTION

3.01 EXAMINATION

A. Examine substrates upon which work will be installed.

B. Coordinate with responsible entity to perform corrective work on unsatisfactory substrates.

C. Commencement of work by installer is acceptance of substrate.

3.02 PREPARATION

A. Protection: Protect adjacent work from contact with mortar.

B. Surface Preparation: Prepare substrate in accordance with manufacturer's installation instructions for the type of substrate being covered.

3.03 INSTALLATION

A. Install and clean stone in accordance with manufacturer's installation instructions for Standard Installation (Grouted Joint) or Jointless/Dry-Stacked installation as specified above.

B. Apply repellent in accordance with repellent manufacturer's application instructions.

3.04 FIELD QUALITY CONTROL

A. Manufacturer's Field Services: Manufacturer’s Field Service Representative shall make two periodic site visits review of on-going installation process but is not responsible for any errors or omissions that are not observed or are previously completed.

3.05 CLEANING

A. Remove protective coverings from adjacent work.

B. Cleaning Veneer Units:
   1. Wash with soft bristle brush and water/granulated detergent solution
   2. Rinse immediately with clean water

C. Removing Effloresence:
   1. Allow veneer to dry thoroughly
   2. Scrub with soft bristle brush and clean water
   3. Rinse immediately with clean water; allow to dry
   4. If efflorescence is still visible, contact ES Customer Service for assistance

END OF SECTION[1]

SECTION 050510

METAL FINISHES

PART 1 - GENERAL

1.1 SUMMARY
- A. Sections Includes: Metal Finishes (Drawing Designation, MF)
  1. Anodizing.
  2. Baked enamel coating.
  3. Fluorourethane coating
  4. PVDF coating.
  5. Powder coated finish.
  6. Stainless steel finish.
- B. Related Sections:
  1. Sections with Metals: Galvanizing.
  2. Sections with Metals: Factory or shop applied primers for field painting or coating.
  3. Section 087100 – Door Hardware: Hardware finishes.
  4. Division 9 – Finishes: Field-applied paints and coatings.

1.2 REFERENCES
- A. Reference Standards: See Section 014200. In addition to requirements shown or specified, comply with applicable provisions of following:
  1. NAAMM Metal Finishes Manual for finish designations and application recommendations.

1.3 SUBMITTALS
- A. General: Submit in accordance with Section 013300.
  1. Submit submittals of this section simultaneously with submittals of sections with components with finishes specified in this section.
- B. Product Data: Submit following:
  1. Product data for each coating.
  2. Color charts for finish indicating manufacturer's colors available for selection.
  3. Include sample of warranty customized for this Project.
- C. Closeout Submittals: Submit following in accordance with Section 017800.

PART 2 - PRODUCTS

2.1 PREPARATION
- A. Sheet Steel to be Coated:
  1. Mechanical Finishes: Complete mechanical finishes of flat sheet metal surfaces before fabrication. After fabrication, finish joints, bends, abrasions, and other surface blemishes to match sheet finish. Protect mechanical finishes on exposed surfaces from damage by application of adhesive paper or other temporary protective covering, prior to shipment.
  2. Surface Preparation: Solvent-clean surfaces in compliance with SSPC-SP1 to remove dirt, oil, grease and other contaminants that could impair paint bond. Remove mill scale and rust, if present, from uncoated steel in compliance with SSPC-SP5 (White Metal Blast Cleaning) or SSPC-SP8 (Pickling).
  3. Chemical Pretreatment: Apply hot phosphate surface treatment to uncoated steel sheet to comply with SSPC-PT4.
  4. Comply with SSPC-PA1 "Paint Application Specification No. 1" for shop painting.
- B. Protective Coatings: Do not use coatings containing lead.
  1. Primed Carbon Steel: Touch-up with primer.
  2. Galvanized Steel: Touch-up with primer.
- C. Metal Patching Compound:
  1. Two-part epoxy and metal filler, putty grade, composed of metal alloy blended with high molecular weight polymer.
  2. Match base metal of putty to item being repaired.
  3. Use steel based alloy for repairing cast iron.
  4. Machinable after curing.
  5. Paste consistency: Negligible slump at 1 inch thickness or less.
  6. Shrinkage: Show no evidence of measurable shrinkage from plastic state to hardened state.
  7. Acceptable Manufacturers and Products:
     a. Super Metal 1111, Belzona; Miami, FL. Use only on steel or cast iron items.
     b. Bondo, Bondo/Mar-Hide; Medina, OH.

c. Accepted Substitute in accordance with Section 012500.

2.2 SHOP FINISHING
A. General: Apply finishes in factory after products are assembled.
B. Protect finish with factory applied protective covering prior to shipment.
1. Remove scratches and blemishes from exposed surfaces which will be visible after completing finishing process.
2. Finish accessories such as trim, flashing, screens, blank-off panels, and fasteners to match assembly.

2.3 ANODIZING
A. Anodizing: Comply with AAMA 611.
B. Clear Anodized: AA-M12C22A41, Architectural Class I, nonspecular as fabricated mechanical finish, etched medium matte, , minimum 0.7 mil thick.
1. May be architectural Class II anodic coating, AA-M12C22A31.
2. Color: As selected by Architect from manufacturer's full range of standard colors, or as indicated in 009000 Master Schedule.

2.4 BAKED ENAMEL COATING
A. Baked Enamel Finish System: Includes dipped, electrostatic, powder coat, and other forms of baked enamel shop finishing.
1. Galvanized Steel Surfaces: Cleaned and phosphate conversion coated prior to application of 0.2 mil dry film thickness rust-inhibitive prime coat.
2. Aluminum Surfaces: Cleaned, etched and given chromate conversion pre-treatment prior to application 0.2 mil dry film thickness of prime coat.
3. Finish Coat: Manufacturer's standard thermo-cured acrylic, polyester or alkyd enamel, 1.0 mil minimum dry film thickness.
4. Total Coating Dry Film Thickness: 1.5 mils.
5. Acceptable Product: Duracron 900 by PPG.
6. Color: As selected by Architect from manufacturer's full range of standard colors, or as indicated in 009000 Master Schedule.

2.5 FLUOROPOLYMER (PVDF) COATING
A. Acceptable Manufacturers:
1. Akzo Nobel Coatings, Inc., Columbus, OH.
2. BASF Corporation, Decatur, AL.
3. PPG Industries Inc., Delaware, OH and Springdale, PA.
4. Valspar Corporation, Garland, TX.
B. Fluoropolymer (PVDF) Coating: AAMA 2605.
1. Resin: 70 percent polyvinylidene fluoride (PVDF).
2. Substrate, Aluminum: Cleaned and chrome phosphate pre-treated.
3. Primer: Manufacturer's standard epoxy or acrylic coating.
a. Dry Film Thickness: Minimum 0.20 mil.
4. Topcoat: PVDF, Dry Film Thickness:
a. Coil: 0.80 mil.
b. Extrusion: 1.0 mil.
C. [Fluoropolymer (PVDF) Coating with Clear Coat: AAMA 2605.
1. Resin: 70 percent polyvinylidene fluoride (PVDF).
2. Substrate, Aluminum: Cleaned and chrome phosphate pre-treated.
3. Primer: Manufacturer's standard epoxy or acrylic coating.
a. Dry Film Thickness: Minimum 0.20 mil.
4. Topcoat: PVDF, Dry Film Thickness:
a. Coil: 0.80 mil.
b. Extrusion: 1.0 mil.
5. Clear Coat: PVDF, Dry Film Thickness:
a. Coil: 0.50 mil.
b. Extrusion: 0.50 mil.]

2.6 POWDER COATED FINISH
A. Shop-Applied Powder Coated Finish: Fabricator's standard .
1. Clean and phosphatize surfaces prior to application of coating.
2. Apply chrome pretreatment to aluminum surfaces to receive PVDF finish.
3. Apply powder coat finish system for sheet steel immediately following surface preparation and chemical pretreatment.

4. Comply with paint manufacturer's recommendations for application and baking to achieve minimum recommended dry film thickness.

2.7 STAINLESS STEEL FINISH

A. Stainless Steel Finishes: ASTM A480.
   1. Protect finishes with factory applied adhesive backed paper covering.
   2. Unless otherwise Scheduled or Indicated: No. 4 - General Purpose Polished, vertical grain. Refer to 009000 Master schedule for finish descriptions.

PART 3 - EXECUTION – NOT USED

END OF SECTION

SECTION 051200 - STRUCTURAL STEEL FRAMING

PART 1 - GENERAL

1.1 RELATED DOCUMENTS

A. Drawings and general provisions of Contract, including General and Supplementary Conditions and Division 01 Specification sections, apply to work of this section.

1.2 DESCRIPTION OF WORK

A. Extent of structural steel work is shown on drawings including schedules, notes and details that show size and location of members, typical connections, and type of steel required. Furnish all labor, materials, services, equipment and appliances required in conjunction with or related to the furnishing, fabrication, delivery, and erection of all structural steel defined below. Include all supplementary parts, members and connections necessary to complete the structural steel work, regardless of whether all such items are specifically shown or specified on the drawings.

B. Structural steel shall be defined as that work prescribed in Section 2.1 of the AISC “Code of Standard Practice for Steel Buildings and Bridges” and all steel supports for elevator guide rails and catwalks (including support members and attached structural steel shapes and plates such as hangers, toeplates, and the grating walking surface).

C. Miscellaneous metal fabrications, architecturally exposed structural steel, metal stairs and ladders, steel joists and joist girders, cold-formed metal framing, and steel deck are specified elsewhere in these Specifications.

1.3 QUALIFICATIONS

A. Fabricator:
1. The structural steel fabricator shall have not less than 5 years of experience in the successful fabrication of structural steel similar to this project.
2. The structural steel fabricator must be registered and approved by the local building official to perform fabrication work without special inspection. Should the fabricator not be so approved, the fabricator shall reimburse the Owner for the cost of the special inspections required by the local building official.

B. Detailer:

1. The structural steel detailer shall have not less than 5 years of experience in the successful detailing of structural steel similar to this project including experience in selecting or completing structural steel connection details using information found in tables in the AISC “Steel Construction Manual.

C. Erector:

1. The structural steel erector shall have not less than 5 years of successful experience in the erection of structural steel of a similar nature to this project.
2. The structural steel erector must participate in the AISC Erector Certification Program and be designated an AISC CERTIFIED STEEL ERECTOR.

D. Professional Engineer: A professional engineer who is licensed to practice engineering in the state where the project is located and who is experienced in providing engineering services of the kind indicated. Engineering services are defined as those performed for projects with structural steel framing that are similar to that indicated for this Project in material,

1. The Professional Engineer employed by the Fabricator for connection design shall be experienced in the specific area of structural steel connection design with demonstrated experience of not less than three projects of similar scope and complexity.

E. Independent Testing Laboratory: Any testing laboratory retained to perform tests that are required by this specification shall meet the basic requirements of ASTM E 329.

1.4 QUALITY ASSURANCE

A. The Contractor is responsible for quality control, including workmanship and materials furnished by his subcontractors and suppliers.

B. Codes and Standards: Comply with provisions of following, except as otherwise indicated. For codes and standards for which no specific version is referenced, the version that is referenced in the applicable building code shall govern, or, if there is no reference in the building code, the latest version of the code or standard shall govern except as otherwise noted in the AISC Steel Construction Manual, 13th edition. Certain sections in this specification contain requirements that are more restrictive and/or different than contained in the standards listed. In such cases, the requirements of this specification shall control.

1. All federal (OSHA), state and local laws that govern safety requirements for steel erection and other requirements if more stringent than the codes and standards enumerated below. OSHA requirements include regulation 29 CFR 1926, Part R, “Safety Standard for Steel Erection”.
2. AISC, "Code of Standard Practice for Steel Buildings and Bridges," except as noted herein.

    a. Certain sections in this specification contain requirements that are more restrictive and/or different than contained in this standard. In such cases, the requirements of this specification shall control.

3. ANSI/AISC 360, "Specification for Structural Steel Buildings."
4. Research Council on Structural Connections (RCSC) "Specification for Structural Joints using High-Strength Bolts.”
5. AISC, “Steel Construction Manual”, Thirteenth Edition.
6. ANSI/AWS D1.1, "Structural Welding Code – Steel.”
7. ANSI/AWS D1.3, "Structural Welding Code – Sheet Steel.”
8. ANSI/AWS D1.4, "Structural Welding Code – Reinforcing Steel.”
9. The Society of Protective Coatings, "SSPC Painting Manual", Volumes 1 and 2.
10. AASHTO, “LRFD Bridge Design Specifications”, U.S. Customary Units.
11. AASHTO, “LRFD Bridge Construction Specifications.”

C. Qualifications for Welding Work: Qualify welding processes and welding operators in accordance with AWS "Structural Welding Code - Steel".

D. Source Quality Control: Materials and fabrication procedures are subject to inspection and tests in the mill, shop, and field by the Owner's testing laboratory. Such inspections and tests will not relieve the Contractor of responsibility for providing materials and fabrication procedures in compliance with specified requirements. The Contractor shall promptly remove and replace materials or fabricated components which do not comply.

E. Questions about Contract Documents: The Contractor shall promptly notify the Architect/Engineer whenever design of members and connections for any portion of the structure are not clearly indicated or when other questions exist about the Contract Documents. Such questions shall be resolved prior to the submission of shop drawings.

F. Owner’s Testing Laboratory Services: Inspection or testing by the Owner does not relieve the Contractor of his responsibility to perform the Work in accordance with the Contract Documents

G. Surveyor: The General Contractor shall employ a qualified land surveyor to perform surveys required by this specification.

1.5 SUBMITTALS

A. Product Data: Submit producer's or manufacturer's specifications and installation instructions for following products; include laboratory test reports and other data to show compliance with specifications (including the specified standards):

1. Structural steel (each type), including certified copies of mill reports covering chemical and physical properties. For structural steel for which evidence exists that the steel may not conform to ASTM requirements, the contractor, where permitted by the engineer, shall engage the services of an independent testing laboratory to test the material according to ASTM A 6 and submit certified test reports that verify conformity to ASTM standards. Tests shall be made for each 10 tons of affected material unless otherwise directed by the Engineer.
2. High-strength bolts (each type), including nuts and washers, including certified copies of mill reports covering physical and chemical properties.
3. Shrinkage-resistant grout.
4. Welding electrodes (each type).
5. Structural steel primer paint.
6. Inorganic or other protective paint.
7. Shear studs.
8. Direct tension indicators.

B. Shop Drawing and Erection Drawings:
1. Definitions:

a. Shop Drawings: Drawings of the individual structural steel shipping pieces that are to be produced in the fabrication shop.
b. Erection Drawings: Field-installation or member-placement drawings that are prepared by the Fabricator to show the location and attachment of the individual shipping pieces.
c. Erection-Bracing Drawings: Drawings that are prepared by the Erector to illustrate the sequence of erection, any requirements for temporary supports and the requirements for raising, bolting, and/or welding. These drawings are in addition to and separate from the Erection Drawings.

2. Shop Drawings: Submit for review and approval shop drawings showing complete details and schedules for fabrication and assembly of structural steel members. The licensed professional engineer responsible for the design of any of the connections shown on the shop drawings shall submit a letter that is sealed attesting that the connection design engineer has reviewed the shop drawings and that the connections detailed and shown on the shop drawings conform to the engineer’s design.
3. Structural steel shop drawings shall include the following minimum information:

a. Include details of cuts, connections, camber, holes, and other pertinent data. Indicate welds by standard AWS symbols, and show size, length, and type of each weld. Indicate type, size, and length of bolts, distinguishing between shop and field bolts. Identify the type of high-strength bolted connection (slip-critical, direct-tension, or bearing connections). Holes, flange cuts, slots and openings shall be made as required by the structural drawings, all of which shall be properly located by means of templates.
b. Provide setting drawings, templates, and directions for installation of anchor bolts and other anchorages to be installed by others.

4. Erection Drawings: Submit for review and approval complete erection drawings showing field-installation and member-placing instructions for locating and attaching the individual shipping pieces.
5. Erection-Bracing Drawings: Submit for record purposes only complete erection-bracing drawings to illustrate the sequence of erection, any requirements for temporary supports and the requirements for raising, bolting, and/or welding.
6. Preliminary Connection Review with Steel Fabricator: The fabricator shall submit for review and approval preliminary details of proposed connections for Engineer's review not less than 14 days in advance of the start of preparation of detailed shop drawings. Proposed variations from the details shown on the drawings will be considered and such variations must have preliminary approval from the Engineer prior to the preparation of detailed shop drawings. Failure to adhere to the requirements of this section obligates the Contractor to take responsibility for any and all resulting delays in the detailing and fabrication of structural steel.

7. The fabricator alone shall be responsible for all errors of detailing, fabrication, and for the correct fitting of the structural members.
8. All fabricated material and connections shall fit within architectural constraints.
9. Structural steel members for which shop drawings have not been reviewed and approved shall not be fabricated.
10. The omission from the shop drawings of any materials required by the Contract Documents shall not relieve the Contractor of the responsibility of furnishing and installing such materials, even though the shop drawings may have been reviewed and approved.
11. Shear Connector Placement Drawing: Provide shop drawing showing proper placement (longitudinal and transverse spacing) of shear connectors on each composite beam requiring such connectors. The shop drawing shall show the proper relationship of the shear connectors to the flutes in the steel deck and the arrangement of shear connectors along the span of the composite beam. Show the method of attachment of shear connectors and proposed brand and model of equipment to be used.

C. Calculations: The fabricator's engineer shall submit complete signed and sealed design calculations showing all information as specified in the "Connections" section under Part 2. The Engineer reserves the right to reject all shop drawings submitted without complete design calculations.

D. Surveys: Submit the information requested for all surveys required by this specification.

E. Test Reports: Submit certified reports of tests required by this Specification Section. Include data on type(s) of tests conducted and test results.

F. Qualification Data:

1. Submit qualification data, including required certifications, for firms and persons specified in the “Qualifications” section under Part 1, to demonstrate their capabilities and experience. Include lists of completed projects with project names and addresses, names and addresses of architects and owners, and other information specified.
2. Submit a resume from the structural steel detailer showing a minimum of two years of experience selecting or completing structural steel connection details using information found in tables in the AISC “Steel Construction Manual”.
3. Submit Welding Procedure Specifications (WPS) in accordance with ANSI/AWS D1.1 for all welded joints. Submit test reports showing successful passage of qualification tests for all non-prequalified WPSs.
4. Provide certification that welders to be employed in work have satisfactorily passed AWS qualification tests as specified in the “Qualifications” section under Part 1. If recertification of welders is required, retesting will be at Contractor's responsibility.
5. A fabricator that is registered with the local building official and is approved to perform fabrication without special inspection shall submit a certificate of compliance stating that the work was performed in accordance with the approved construction documents.

G. Substitutions:

1. Substitutions for the member sizes, type(s) of steel connection details or any other modifications proposed by the Contractor will be considered by the Architect/Engineer only under the following conditions:

    a. That the request has been made and accepted prior to the submission of shop drawings. All substitutions shall be clearly marked and indicated on the shop drawings as a substitute.
    b. That there is a substantial cost advantage or time advantage to the Owner; or that the proposed revision is necessary to obtain the required materials or methods at the proper times to accomplish the work in the time scheduled.
    c. That sufficient sketches, engineering calculations, and other data have been submitted to facilitate checking by the Architect/Engineer, including cost reductions or savings in time to complete the work.
    d. In no case shall such revisions result in additional cost to the Owner.

H. Longspan Steel Erection Procedure: Submit a written, detailed erection procedure for the longspan steel system that has been reviewed and approved by the General Contractor, Fabricator, Steel Erector and his

registered Engineer. Submit calculations and drawings prepared under the supervision of a licensed professional engineer for the final erection procedure.

1.6 PRE-CONSTRUCTION CONFERENCE

A. At least 14 days prior to beginning structural steel erection, the Contractor shall hold a meeting to review the detailed quality control and construction requirements and to determine the procedures for producing proper structural steel construction. Also review requirements for submittals, status of coordinating work and availability of materials. Establish work progress schedule and procedures for materials inspection, testing and certifications.

B. The Contractor shall require responsible representatives of every party who is concerned with the structural steel work to attend the conference, including but not limited to the following:

1. Contractor's Superintendent.
2. Laboratory responsible for field quality control.
3. Special Inspector / Laboratory responsible for shop inspection or testing.
4. Structural Steel Detailer.
5. Structural Steel Fabricator.
6. Structural Steel Erector.
7. Owner's and Architect's/Engineer's Representative.

C. Minutes of the meeting shall be recorded, typed and printed by the Contractor and distributed by him to all parties concerned within 5 days of the meeting. One copy of the minutes shall be transmitted to the following for information purposes:

1. Owner's Representative.
2. Architect.
3. Engineer-of-Record.

D. The Engineer shall be present at the conference. The Contractor shall notify the Engineer at least 7 days prior to the scheduled date of the conference.

1.7 DELIVERY, STORAGE AND HANDLING

A. Deliver materials to site at such intervals to ensure uninterrupted progress of work.

B. Deliver anchor rods and anchorage devices, which are to be embedded in cast-in-place concrete or masonry, in ample time so as not to delay work.

C. Store materials to permit easy access for inspection and identification. Keep steel members off ground, using pallets, platforms, or other supports. Protect steel members and packaged materials from corrosion and deterioration. Do not store materials on structure in a manner that might exceed allowable loads on or cause distortion or damage to members or supporting structures. Repair or replace damaged materials or structures as directed by Architect/Engineer.

D. Furnish all fuel, maintenance, and equipment required for hoisting and placement of materials under this contract.

E. Process, pay for and maintain all permits and certificates of on-site inspection required for derricks, cranes and hoisting equipment. No derrick, crane or hoisting equipment shall be operated without a certificate of operation and a certificate of on-site inspection, as required by governing authorities.

1. In addition to the above, all hoisting equipment shall be installed, operated and maintained in accordance with all applicable regulations of authorities having jurisdiction.
2. The Contractor shall furnish street storage and sidewalk crossing permits.

1.8 JOB CONDITIONS

A. The Contractor shall coordinate the fabrication and erection of all structural steel work with the work of other trades.

PART 2 - PRODUCTS

2.1 MATERIALS

A. Structural Steel: All hot rolled steel plates, shapes, sheet piling, and bars shall be new steel conforming to ASTM A 6.

B. Structural steel shall comply with the provisions of the following ASTM Specifications as appropriate for the grades and types, and at the locations as specified on the drawings:

1. Structural Steel Wide Flange and WT Shapes: High Strength Steel, ASTM A 992. ASTM A 572, Grade 50 is acceptable as a substitute for A992.
2. ASTM A 913 has special properties for seismic applications and is available from TradeArbed under their Histar trademark. Not all sizes are readily available. Contact your local fabricator or TradeArbed to find out available sizes.
3. M-Shapes, S-Shapes, and Channels: Carbon Steel, ASTM A 36.
4. Angle Shapes: Carbon Steel, ASTM A 36.
5. Structural Steel Plates and Bars: Carbon Steel, ASTM A 36.
6. Structural Steel Plates and Bars: High Strength Steel, ASTM A 572, Grade 50.
7. Steel Pipe: ASTM A 53 (Type E or S) Grade B (Fy = 35 ksi).
8. Round HSS: ASTM A 500 Grade B (Fy = 42 ksi) or ASTM A 501 with written approval from the engineer.
9. Round HSS: ASTM A 500, Grade C (Fy = 46 ksi).
10. Square and Rectangular HSS: ASTM A 500, Grade B (Fy = 46 ksi).
11. Square and Rectangular HSS: ASTM A 500, Grade C (Fy = 50 ksi).

12. Connection Material: Unless noted otherwise on the drawings, column stiffener plates and doubler plates at moment connections shall be the same grade of steel as the beam connecting the column (highest grade if more than one grade is used). All other connection material except as noted otherwise on the drawings including bearing plates, gusset plates, stiffener plates, filler plates, angles, etc. shall be A36 steel unless a higher or matching grade of steel with the members connected is required by strength or stiffness calculations and provided the resulting sizes are compatible with the members connected.

C. Structural Steel Surfaces: For fabrication of work which will be exposed to view in the completed structure, use only materials which are smooth and free of surface blemishes including pitting, seam marks, roller marks, rolled trade names and roughness. Remove such blemishes by grinding, or by welding and grinding, prior to cleaning, treating and application of surface finishes.

D. Structural Bolts and Threaded Fasteners: Structural bolts and threaded fasteners shall comply with the following ASTM Specifications as appropriate for the types and at the locations as specified on the drawings:

1. ASTM A 325 Type 1.
2. ASTM A 490 Type 1.
3. Alternative Design Fasteners: Fasteners that incorporate a design feature intended to indicate a predetermined tension or torque (load indicator bolts or “twist-off” bolts) shall conform to the requirements of section 2.8 of the RCSC “Specification for Structural Joints Using ASTM A 325 or A 490 Bolts”.

a. Bolts that are manufactured to conform to ASTM A 325 shall additionally conform to ASTM F 1852.
b. Bolts that are manufactured to conform to ASTM A 490 shall additionally conform to ASTM F 2280.

c. Subject to conformance with specified requirements, acceptable manufacturers include but are not limited to:

1) Nucor Fastener, A Division of Nucor Corporation.
2) Lake Erie Screw Corp.
3) Vermont Fasteners Manufacturing.
4) Lohr Structural Fasteners.

4. Threaded Round Stock:

a. ASTM A 36.
b. ASTM A 572 Grade 50 (to 2 inches in diameter).

5. Bolts and Nuts, High Strength Bolts: Bolts and nuts for all high strength bolts shall be heavy hex head conforming to ANSI Standards B18.2.1 and B18.2.2 respectively. Nuts shall conform to ASTM A 563.
6. Washers: All washers shall be circular, flat and smooth and shall conform to the requirements of Type A washers in ANSI Standard B23.1. Washers for high strength bolts shall be hardened and conform to ASTM F 436. Beveled washers for American Standard Beams and channels shall be square or rectangular, shall taper in thickness (16 2/3% slope) with an average thickness of 5/16". When an outer face of a bolted part has a slope greater than 1:20 with respect to a plane normal to the bolt axis, a beveled washer shall be used. Washers to be used with A490 bolts larger than 1 inch in diameter and installed over oversized or short-slotted holes and other similar situations shall conform to ASTM F 436 except with 5/16 inch minimum thickness.
7. Zinc-Coated Bolts: ASTM A 325 bolts, with their nuts and washers, that are used to connect steel called for on the drawings or in the specifications as hot-dip galvanized after fabrication shall be zinc-coated either by the hot-dip process in accordance with ASTM A 153, Class C or by the mechanical deposition process in accordance with ASTM B 695, Class 50, Type 1. The bolts, nuts, and washers shall all be zinc-coated using the same process and they shall be considered together as an assembly and shall be tested and shipped together as such. Comply with all the requirements of ASTM A 325 and ASTM A 563 as they relate to zinc-coated materials. ASTM F 1852 bolts with their nuts, and washers shall be zinc-coated only by the mechanical deposition process in accordance with ASTM B 695, Class 50, Type 1. Do not zinc-coat ASTM A 490 bolts.
8. Direct Tension Indicators: Compressible washer-type direct-tension indicators conforming to ASTM F 959.

a. Subject to conformance with specified requirements, acceptable manufacturers include but are not limited to:

1) Applied Bolting Technology.
2) Turnasure, LLC.

9. Bolt Lubrication: All bolts shall be well lubricated at time of installation. Dry, rusty bolts will not be allowed.
10. New Bolts: All bolts shall be new and shall not be reused.

E. Electrodes for Welding:

1. Provide electrodes that comply with AWS D1.1, "Structural Welding Code - Steel" and that can produce welds that have a minimum Charpy V-notch toughness of 20 ft-lbs at 40° F, unless noted otherwise in these specifications or on the drawings.
2. Electrodes for various welding processes shall be as specified below:

a. SMAW:

1) E70XX low hydrogen
2) E80XX for Grade 60 & 65 Steel with CJP welds or as indicated on the drawings

b. SAW:

1) F7X-EXXX

2) E8X–EXX-XX for Grade 60 & 65 Steel with CJP welds or as indicated on the drawings

c. GMAW:

1) ER70S-X
2) ER80S-X for Grade 60 & 65 Steel with CJP welds or as indicated on the drawings

d. FCAW:

1) E7XT-X
2) E8XT-X for Grade 60 & 65 Steel with CJP welds or as indicated on the drawings

3. Electrodes shall be compatible with parent metal joined.

F. Headed Studs used as Anchors for Structural Steel Members into Concrete: AWS Type A studs manufactured in conformance with ASTM A 108 with a minimum tensile strength of 61,000 psi of sizes as specified on the drawings.

G. Headed Studs used as Shear Connectors: AWS type B studs manufactured in conformance with ASTM A 108 with a minimum tensile strength of 65,000 psi of sizes as specified on the drawings.

H. Deformed Bar Anchors: AWS Type C studs manufactured in conformance with ASTM A 496 with a minimum tensile strength of 80,000 PSI. ASTM A 615 reinforcing bars may not be substituted for deformed bar anchors.

I. Anchor Rods:

1. All anchor rods shall conform to ASTM F 1554. unless noted otherwise on the drawings and shall be of the yield strength as specified below as appropriate for the types and at the locations as specified on the drawings:

a. Grade 55 (1/4 inch to 4 inches in diameter).(Also comply with Supplementary Requirement S1 of ASTM F 1554).

2. Anchor rods used with galvanized baseplates shall be galvanized.
3. Nuts: All nuts with anchor rods shall be heavy hex head conforming to ASTM A 563.
4. Washers: Unless indicated otherwise, washers for all base plates shall be in accordance with the AISC “Steel Construction Manual”, Table 14-2 with holes 1/16” larger than the anchor rod diameter. Washers shall conform to ASTM A 36 steel.

J. Structural Steel Primer Paint:

1. Unless noted otherwise, primer paint shall be one of the following types with the indicated surface preparation:

a. SSPC-Paint 25.1, Type II; zinc oxide, raw linseed oil and alkyd primer, surface prepared according to SSPC-SP-2 (Hand Tool Cleaning) unless noted otherwise in this specification.
b. SSPC-Paint 23 acrylic primer, surface prepared according to SSPC-SP-6 (Commercial Blast Cleaning).

2. Refer to Architect's drawings and specifications for final paint finish requirements of structural steel. Primer paint shall be compatible with final paint requirements.

K. Non-Shrink Grout: Provide grout type(s) as specified on the drawings:

1. Non-Metallic Non-Shrink Grout: Premixed, non-corrosive, non-staining product containing Portland cement, silica sands, shrinkage compensating agents, and fluidity improving compounds. Conform to ASTM C 1107. Provide the minimum strength as shown below as determined by grout cube test at 28 days:
a. 8,000 PSI for supporting concrete greater than 3000 psi and less than or equal to 4000 psi.

b. Unless noted otherwise on the drawings, grout strength on supporting concrete greater than 4000 psi shall be 8000 psi.

Subject to conformance with specified requirements, acceptable non-shrink grouts include:

a. L&M Construction Chemicals, Inc.; Crystex and Duragrout.
b. Dayton-Superior Corporation; Sure Grip High Performance Grout and 1107 Advantage Grout.
c. BASF Construction Chemicals; Masterflow 555, and Set Grout.
d. U.S. Grout Corp.; Five Star Grout.
e. The Euclid Chemical Company; NS Grout.
f. Hilti, Inc.; CG 200 PC.

L. Grating: Welded steel bar grating of the type, depth and finish noted on the drawings capable of carrying not less than the stated live load and deflecting not more than span/360 under that load.

M. Hot Dip Galvanizing:

1. Scope: All structural steel items and their connections permanently exposed to exterior conditions or that are within areas of unconditioned airspace, whether specified on the drawings or not, shall be hot-dipped galvanized after fabrication unless indicated on the drawings or in Specification Section 09900 to receive a primer and/or finish coat. Such items include, but are not limited to:

a. Base plates and anchor rods supporting galvanized members shall also be galvanized.
b. Shelf angles.
c. Parapet wall supporting members.
d. Screen wall supporting members.
e. Window washing support members.
f. Embedded plates in concrete exposed to unconditioned airspace.
g. Garage guardrail steel and connections.
h. Cooling tower support steel.
i. Building skin support steel exposed to moisture outside the exterior waterproofing surface.
j. Examine the architectural and structural drawings for other items required to be hot dipped galvanized.

2. Zinc-coat all ASTM A 325 bolts nuts, and washers used in the connection of such steel. Field welded connections shall have welds protected and the exposed portions of ASTM A 490 bolts, nuts and washers shall be protected with galvanizing repair paint.
3. Surface Preparation: All steel to be hot dip galvanized shall undergo the following surface preparation as specified by the Steel Structures Painting Council (SSPC), Volume 2.

a. Remove all grease, oil, grime and foreign contaminants by thorough cleaning with an alkaline or organic solvent followed by thorough rinsing in cold water.
b. Remove scale by pickling in diluted sulfuric or hydrochloric acid. Pickling shall be followed by a rinse in warm water and a second rinse in cold water. As an alternative to pickling, the steel may be white metal blast cleaned according to SSPC-SP-5.
c. Dip in a flux solution of zinc ammonia chloride followed by drying at room temperature.

4. Zinc Coating: The zinc coating for steel shapes and plates shall conform to ASTM A 123. Weight of zinc coating per square foot of surface for 1/8 inch and 3/16" thick steels shall average not less than 2.0 oz. with no individual thickness less than 1.8 oz. The coating weight shall average not less than 2.3 oz. with no individual thickness less than 2.0 oz. for 1/4" thick and heavier steel.

N. Galvanizing Repair Paint: Galvanizing repair paint shall be "ZRC Cold Galvanizing Compound" as manufactured by ZRC Chemical Products or a paint complying with SSPC-Paint 20.

2.2 FABRICATION

A. Shop Fabrication and Assembly:

1. Fabricate and assemble structural assemblies in shop to greatest extent possible. Fabricate items of structural steel in accordance with AISC Specification and as indicated on approved final shop drawings. Provide camber in structural members where indicated. Fabricator shall coordinate connection details, joint fit-up procedures, and field adjustment requirements with erector. The General Contractor shall coordinate provision of all erection bolts, lifting lugs or other devices required for erection with the fabricator and the erector and for interference with architectural finishes and constraints.
2. Properly mark and match-mark materials for field assembly. Fabricate for delivery sequence which will expedite erection and minimize field handling of materials.
3. Clearly mark the grade of steel on each piece, distinguishable in the field from floor surfaces, for purpose of field inspection and confirmation of grade of steel.
4. Milled surfaces of built-up sections shall be completely assembled or welded before milling.
5. Fitted stiffeners shall be fabricated neatly between flanges, and the ends of stiffeners shall be milled or ground to secure an even bearing against abutting surfaces. All milled or ground joints shall bear throughout their contact length.

B. Dimensional Tolerances: Dimensional tolerances of fabricated structural steel shall conform to Section 6.4 of the AISC Code of Standard Practice.

C. Camber:

1. Camber of structural steel members is indicated on the drawings. Camber shall be measured in the fabricators shop in the unstressed condition, prior to erection. The fabricator shall provide camber measurements of all beams and a report to the Testing Laboratory confirming this has been done.
2. Where possible, camber of beams shall be applied by a cold bend process.
3. The local application of heat may be used to introduce or correct camber, curvature, or straightness provided the temperature of the heated area, as measured by temperature crayons or other approved means, does not exceed 1200°F.
4. Where indicated on the drawings in a camber diagram, cantilever or double cantilever beams shall be cambered for the main span and cantilever end separately, either by a staged cold bending process or by the application of heat.
5. Beams [and trusses] detailed without specified camber shall be fabricated so that after erection any natural camber due to rolling or shop fabrication is upward.
6. Specified camber for beams shall be in accordance with the AISC “Code of Standard Practice”.

D. Splices in Structural Steel: Splicing of structural steel members in the shop or the field is prohibited without prior approval of the Engineer. Any member having a splice not shown and detailed on approved shop drawings will be rejected.

E. Compression Joints: Ends of columns, except as otherwise noted, and other compression joints at splices and other connections as noted on the drawings which depend on contact bearing as part of the splice strength shall be finished to bear in accordance with AISC Specification M2.6 so as to provide complete true bearing in accordance with AISC Specification M4.4.

F. Cutting: Manual oxygen cutting shall be done only with a mechanically guided torch. An unguided torch may be used provided the cut is not within 1/8 inch of the finished dimension and final removal is completed by means such as chipping or grinding to produce a smooth surface quality free of notches or jagged edges. All corners shall be smooth and rounded to a minimum 1/2" radius.

G. Holes for Other Work: Provide holes required for securing other work to structural steel framing, and for passage of other work through steel framing members as shown on the contract documents, and/or the final shop drawings.

1. Provide specialty items as indicated to receive other work.
2. Cut, drill, or punch holes perpendicular to metal surfaces. Do not flame cut holes or enlarge holes by burning. Drill holes in bearing plates.

H. Lifting and Erection Devices: The fabricator shall be responsible for designing, detailing and furnishing all lifting devices and erection aids required for erection. Such devices shall be removed after erection if they interfere with architectural finish requirements.

I. Drainage Holes: Provide 1 inch diameter drainage (weep) holes in all members (trusses, girders, beams, etc.) exposed to weather where rain water could collect (at low points and/or behind dams caused by connections, stiffener plates, etc.). Show all holes on shop drawings for review by the Engineer.

2.3 WELDING

A. Code: All shop and field welding shall conform to all requirements in the "Structural Welding Code - Steel", ANSI/AWS D1.1, as published by the American Welding Society (AWS).

B. Welder Certification: All shop and field welders shall be certified according to all the applicable AWS procedures for the welding process and welding position used. Each welder shall be assigned an identifying symbol or mark and all shop and field welded connections containing complete or partial joint penetration welds, multi-pass fillet welds, and fillet welds greater than 5/16” shall be identified by the symbol or mark of the welder responsible for the connection.

C. Minimum Size and Strength:

1. Fillet Welds: Minimum size of fillet welds shall be as specified in Table J2.4 in AISC Specification, Chapter J.
2. Partial-Penetration Groove Welds: The minimum effective throat thickness of partial-penetration groove welds shall be as specified in Table J2.1 in AISC Specification, Chapter J.
3. Minimum Strength of Welded Connections: Except as specified below in "Connections" or noted otherwise on the drawings, all shop and field welds shall develop the full tensile strength of the member or element joined. All members with moment connections as indicated on the drawings shall be welded to develop the full flexural capacity of the member, unless noted otherwise on the drawings.

D. Filler Metal Requirements: Weld metal shall be as specified in Table J2.5 in AISC Specification, Chapter J and other requirements of this specification.

E. Welding Procedure Specification:

1. All welding shall be performed in accordance with a Welding Procedure Specification (WPS) as required in AWS D1.1 and approved by the Owner’s Testing Laboratory and the Architect/Engineer. The WPS variables shall be within the parameters established by the filler-metal manufacturer. Engage the services of an independent testing laboratory to provide the qualification testing required by AWS D 1.1, Chapter 4, part B to qualify any non-prequalified WPS needed for the project. The testing laboratory shall prepare Welding Procedure Qualification Records (WPQR) documenting the successful qualification of each Welding Procedure Specification.

F. Welding Procedures:
1. All welding processes shall comply with the requirements of ANSI/AWS D1.1 unless noted otherwise.
2. Built-up sections assembled by welding shall be free of warpage and all axes shall have true alignment.
3. Welds not specified shall, if possible, be continuous fillet welds developing the minimum strength, as specified above, using not less than the minimum fillet welds as specified by AISC.
4. The toughness and notch sensitivity of the steel shall be considered in the formation of all welding procedures to prevent brittle and premature fracture during fabrication and erection.
5. Before welding is started, the fabricator shall submit for the approval of the Owner's Testing Laboratory in consultation with the Architect/Engineer, written Welding Procedure Specification for all joints to be welded. After approval, the Welding Procedure Specification shall be followed without deviation unless specific approval for change is obtained from the Owner's Testing Laboratory and the Architect/Engineer.
6. Before welding, particular attention shall be paid to surface preparation, fit up and cleanliness of surfaces to be welded.
7. Minimum preheat and interpass temperatures for structural steel welding shall be as specified in ANSI/AWS D1.1, except that no welding shall be performed when the ambient temperature is lower than 0 degrees F. The temperature shall be measured from the side opposite that upon which the preheat is applied.

8. The heat, input, length of weld and sequence of weld shall be controlled to prevent distortions. The surfaces to be welded and the filler metals to be used shall be subject to inspection before any welding is performed.
9. Welds shall be sound throughout. There shall be no crack in any weld or weld pass. Welds shall be considered sound if they conform to AWS requirements, as confirmed by non-destructive testing.
10. Welds shall be free from overlap.
11. Craters shall be filled to the full cross section of the welds.
12. For high-strength low-alloy steels, follow welding procedures as recommended by steel producer for exposed and concealed connections.
13. Fabricator and erector shall coordinate welding responsibility at all welded joints.

G. Stress Relieving: All welding sequences shall be such as to reduce the residual stresses due to welding to a minimum value. If high residual stresses are present, stress relieving of joints shall be required. Welded connections shall be detailed and designed to minimize the accumulation and concentration of through-thickness strains due to weld shrinkage.

2.4 BOLTING

A. Bolt Diameter: Minimum bolt diameter shall be 3/4 inch. The difference in diameter between bolts of differing sizes used on the project shall be not less than ¼".

B. Connection Type: Unless noted otherwise on the drawings, all bolted connections shall be snug-tightened using high-strength bolts in standard holes (hole diameter nominally 1/16 inch greater than the nominal bolt diameter) with threads included in the shear planes. Notwithstanding, the contractor shall be responsible to adhere to provisions of AISC Specification Section J1.10, which lists circumstances under which certain connections require pretensioned high strength bolts.

C. Oversize, Short Slotted and Long Slotted Holes: The dimensions and washer requirements of oversize, short slotted, and long slotted holes shall conform to the AISC "Specification for Structural Joints Using ASTM A 325 or A 490 Bolts."

D. Fastener Tension:

1. High strength bolts in snug-tightened joints shall be tightened to a snug tight condition only. Do not pretension bolts in snug-tightened joints the same as if they were in slip-critical joints. The snug-tightened condition is defined as the tightness that exists when all plies are in firm contact. This may usually be attained by a few impacts of an impact wrench or the full effort of an ironworker using an ordinary spud wrench.
2. High-strength Bolts in Slip-critical and Pretensioned Joints:

    a. High-strength bolts in slip-critical and pretensioned joints shall be tightened to achieve the minimum bolt tension as specified in the AISC "Specification for Structural Joints Using ASTM A 325 or A 490 Bolts" when all the fasteners of a joint are tight.
    b. Any of the four methods to tighten bolts specified in the AISC "Specification for Structural Joints Using ASTM A 325 or A 490 Bolts" may be used to achieve the minimum bolt tension. The tightening procedure that uses direct tension indicator washers shall conform to the requirements of ASTM F 959. Conform to the requirements of ASTM F 1852 for a Twist-Off-Type Tension-Control bolt pretensioning.
    c. The Contractor shall cooperate with the Owner's Testing Laboratory when Arbitration Testing and Inspection is called for due to a disagreement regarding the tension in installed bolts that have been inspected according to the Structural Testing Laboratory Services Specification.

E. Washers: Washers under the bolt head and/or nut shall be used as required by the AISC "Specification for Structural Joints Using ASTM A 325 or A 490 Bolts."

F. Bolt Lubrication: All bolts shall be well lubricated at time of installation. Dry, rusty bolts will not be allowed.

G. Impact Wrenches: Properly sized and lubricated air impact wrenches with adequate air pressure shall be utilized for all bolt installation.

H. New Bolts: All bolts shall be new and shall not be reused.

2.5 CONNECTIONS

A. Conceptual connection details with the required member design forces are shown on the drawings for bidding purposes and are applicable to all connections not designed and completely detailed on the drawings. The conceptual details are provided only to indicate the connection type required and may not fully represent the complexity of the connection as required by the final connection design for the forces they must resist. Except as noted below, the fabricator is responsible for engaging the services of a connection specialty engineer to prepare a final connection design for submission that meets the requirements of the conceptual connection details and resists the indicated design forces. Refer to the drawings and specifications for complete requirements.

By bidding this project, the fabricator acknowledges that additional connection elements may not be specifically shown in the conceptual details but may be required by the final connection design, such as stiffener plates, doubler plates, supplement/reinforcing plates or other connection material. The fabricator is responsible to include within his bid all material and labor required to conform to the intent of the conceptual details and to carry the design forces indicated, regardless of whether or not all connection elements (such as stiffener plates, doubler plates, supplement/reinforcing plates or any other connection material) required by final connection design are shown in the conceptual detail.

B. Typical Connection details are indicated on the drawings.

C. Design and Detailing Procedure:

1. Unless noted otherwise or specifically detailed on the drawings, end connections of beams, girders, and trusses shall be designed as flexible and the connection shall accommodate end rotations of the unrestrained beams. Restrained end connections, as indicated on the drawings, shall be designed for the combined effect of bending moment and shears induced by the rigidity of the connection. Forces to be used in the design are described below.
2. The fabricator's licensed professional engineer shall design and submit sealed calculations documenting the design and showing details of the assembled joint with the bolts and welds required for the conditions noted below:

    a. For each connection not otherwise completely detailed on the drawings
    b. Where connections are encountered on the project that does not match those assumed in the AISC Manual or other similar publication.
3. Where connections are of the type than can be selected or completed using information found in tables in the AISC “Steel Construction Manual” or related publications, sealed calculations need not be submitted provided the project design conditions precisely match those assumed in the referenced publications. For conditions encountered on the project that do not conform to the AISC Manual or other similar publication, a complete design shall be prepared and submitted for engineer’s review.
4. The fabricator’s licensed professional engineer shall seal all design calculations.
5. The Engineer reserves the right to reject all shop drawings submitted without complete design calculations if required. Failure to adhere to the requirements of this section obligates the Contractor to take responsibility for any and all resulting delays in the detailing and fabrication of structural steel.

D. Design Intent: It is the intention of the plans and specifications that shop connections be welded or bolted and that field connections be bolted, unless detailed otherwise on the drawings.

E. Preliminary Connection Review: The fabricator shall submit preliminary details of proposed typical connections for Engineer review not less than 14 days prior to the start of preparation of detailed shop drawings. Proposed variations from the details shown on the drawings will be considered and such variations must obtain preliminary approval from the Engineer prior to preparation of detailed shop drawings.

F. Flexible (Simple) Beam Connections:

1. All typical beam simple connections shall conform to requirements of the AISC specifications. Refer to the drawings for typical connection types.
2. Seated Beam Connections and Stiffened Seated Beam Connections shall not be used unless indicated on the drawings or unless Engineer approval is obtained to verify capacity of supporting member for the resulting eccentricity. The fabricator must verify and bear responsibility that the use of such connections does not interfere with architectural or MEP requirements.
3. Simple Beam Connection Capacity: Support a factored load reaction R equal to the reaction shown on the plans. Contact the Engineer if no reaction for a beam is shown on the plan. Each connection shall contain not less than the minimum number of bolts shown in the AISC connection tables for each beam size.

G. Restrained (Moment) Connections:

1. Refer to the drawings for Moment Connection Details.
2. Design Reactions for Moment Connected Beams: Shear connections for moment-connected beams shall be designed for the factored reaction shown on the drawings.
3. Design and Furnishing of Reinforcement in Moment Connected Joints: As part of the design responsibility outlined above, the fabricator shall design and furnish all additional reinforcement in moment connected joints to resist the specified design forces unless otherwise specifically detailed on the drawings. Column sections shall be investigated for web shear, web yielding, web buckling, and tension. Stiffeners and/or doubler plates shall be furnished as required by the AISC Specification Section K1.

H. Tightening of Bolts in Welded Moment Connections. At moment connections where beams are complete-joint penetration welded directly to columns or girders in the field, welds shall be made after installation of erection bolts to draw the pieces together and before the final shear connection bolts are tightened. Where loose moment plates are used, such plates shall be groove welded to columns prior to connecting these plates to the beams.

I. Column Splices:

1. Compression Splice: Unless indicated otherwise on the drawings all column splices shall be either a bolted compression splice using high strength snug-tightened bolts or a welded compression splice. Splice and filler plate sizes, thicknesses, and number of fasteners or weld information shall be as shown in Table 14-3 of AISC "Steel Construction Manual". It shall be the fabricator's responsibility to examine the architectural drawings to verify that splice plates and fasteners do not violate architectural finish requirements.
2. Bearing and Fit-Up of Column Compression Joints: All column splices, except those that are direct welded with complete-joint penetration welds, shall be considered as a compression joint as defined herein unless noted otherwise on the drawings.

J. Base Plates and Bearing Plates:

1. Finish: All baseplates and bearing plates shall be finished in accordance with AISC Specification M2.8.
2. Attachment to Column: Unless shown otherwise on the drawings, all baseplates and bearing plates shall be welded all around to the column with minimum fillet welds as specified in AISC Specification Table J2.4.
3. Anchor Rod Holes in Baseplates: Hole sizes in baseplates for anchor rods shall be made oversize as described in the AISC "Steel Construction Manual", Table 14-2.

K. Hangers and Braces:

1. Connections for all hangers and braces shall have connections designed to develop the factored axial force shown on the drawings. Contact the Engineer if no force for a member is shown on the drawings.
2. Compression members composed of two or more rolled shapes separated from one another by intermittent fillers shall be connected to one another at such fillers at intervals (not to exceed 48") so that the slenderness ratio l/r of either shape, between the fasteners, does not exceed 75% of the governing slenderness ratio of the built-up member. The least radius of gyration, r, shall be used in computing the slenderness ratio of each component part.

L. Stiffeners: Provide stiffeners finished to bear under load concentrations where shown on the drawings.

M. Steel Shelf Angles: Shelf angles supporting veneer shown on the drawings to be continuous shall be furnished to a maximum length of 20’-0”. Provide a 1/4" gap at each joint. The gap shall not be welded. The distance from the joint to the first supporting bolt shall not exceed 40% of the bolt spacing (12" maximum). Shelf angles shall be continuous around corners with corner joint complete-joint penetration welded. The distance to the first supporting bolt from the corner shall not exceed 12”.

N. Limitations on Use of A307 Bolts: ASTM A 307 bolts shall not be used in any permanent steel-to-steel or concrete–to-steel connection.

O. Bolts in Combination with Welds: Bolts shall not be considered as sharing the load in combination with welds, except as allowed in AISC Specification Section J1.8.

2.6 SURFACE PREPARATION AND SHOP PRIME PAINTING

A. Specification: Surface preparation, paint, and painting practices shall conform to the "SSPC Painting Manual", Volumes 1 and 2.

B. Scope: All steel shall remain unpainted, except the following:

1. Shop paint surfaces that are to remain exposed to view in the final construction.
2. Shop paint any steel other than weathering steel that, in the final construction, will not be in a controlled environment and is therefore subject to moisture or high humidity infiltration and that has not been specified to be galvanized.
3. Shop paint any steel that is shown on the drawings to receive a finished paint system as defined in Specification Section 099000.
4. Coordinate all shop painting of structural steel with Architect's painting requirements as specified on the architectural drawings and in the specifications. The Fabricator shall be responsible for determining all painting requirements (which surfaces are to be painted or left unpainted) on the project prior to fabrication.

C. Additional Painting Requirements

1. Extend shop paint to 2" from location of welds on surfaces that are to be field welded.
2. All unpainted mating surfaces of all elements that are welded together into an assembly that is permanently exposed to the exterior shall be seal welded in addition to structural welding requirements.
3. If individual elements (including the mating surfaces) of an assembly that is required to be painted are painted prior to welding into an assembly, then all painted surfaces affected by welding shall be touched-up and repaired (according to manufacturer’s instructions, if any) to prevent corrosion bleeding.
4. The fabricator shall be responsible to ensure that all elements of all assemblies that are to be painted are fabricated so that no exposed surface shall be subject to stains due to corrosion bleeding during the warranty period of the paint.
5. Structural steel elements that are bolted with slip-critical joints and are required on the drawings to be painted shall have all faying surfaces (including all surfaces of filler plates, member end supplement plates and welds) painted to comply with the specified slip-critical coating requirement.

D. Surface Preparation - Unpainted Steel: All structural steel that is not specified to receive a shop coat of primer paint shall be prepared in accordance with Society for Protective Coatings specifications as follows:

1. SSPC-SP 2, “Hand Tool Cleaning” or SSPC-SP 3, “Power Tool Cleaning” unless otherwise specified.
2. SSPC-SP 6, “Commercial Blast Cleaning” shall be applied to the faying surfaces of connections that are noted on the drawings as slip-critical connections requiring a Class B surface. Apply this surface preparation to the area surrounding all bolt holes including the area up to 2” outside the outer-most holes.

E. Surface Preparation and Primer Paint - Shop Painted Steel:

1. Surface Preparation: Prepare the surface of all structural steel specified to be shop painted as required by the paint manufacturer or the Society for Protective Coatings specifications, but not less than the following:

    a. SSPC-SP 2, “Hand Tool Cleaning” or SSPC-SP 3, “Power Tool Cleaning” unless otherwise specified.
    b. SSPC-SP 6, “Commercial Blast Cleaning” shall be applied to the faying surfaces (including filler and member-end supplement plates, if any) of connections that are noted on the drawings as requiring a slip-critical coating. At a minimum, apply this surface preparation to the area between and surrounding all bolt holes including the area up to 2” outside the outer-most holes.

2. Priming: Immediately after surface preparation, apply primer to all structural steel specified to be shop primed in strict accordance with manufacturer’s instructions and the Society for Protective Coatings specifications. Apply paint at a rate to conform to the manufacturer’s written instructions and to provide a dry film thickness of not less the 1.5 mils. Use priming methods that result in full coverage of joints, corners, edges, welds, and all exposed surfaces. Apply two coats to surfaces that are inaccessible after assembly or erection. Change the color of the second coat to distinguish it from the first coat.
3. Finish Coat: Coordinate shop primer paint requirements with architectural drawings and specifications. The primer selected must be compatible with any specified finish coat.

F. Shop Touch-Up Painting: The Fabricator shall provide for cleaning and touch-up painting of welds, bolted connections (including nuts, bolts, washers, filler plates, member end supplement plates and welds, if any), and abraded areas. Prior to shipment, apply paint to exposed areas using same materials and surface preparation as used for shop painting. Paint shall be applied by brush or spray with minimum dry film thickness of 1.5 mils.

PART 3 - EXECUTION

3.1 ERECTION

A. The Erection work shall comply with the requirements of AISC Specification Section M4.

B. Inspection: Erector shall examine areas and conditions under which structural steel work is to be installed and notify the Contractor and the Architect/Engineer in writing of conditions detrimental to proper and timely completion of the work.

C. Surveys: The following surveys shall be performed.

1. Initial Survey: Check elevations of concrete and masonry bearing surfaces and anchor bolt locations prior to erection and submit any discrepancies to the Engineer prior to the start of erection. Corrections or compensating adjustments to the structural steel shall be made and approved prior to the start of erection.
2. Final Survey: Upon completion of erection of the steel frame, and before the start of work by other trades that may be supported, attached, or applied to the frame, a final survey shall be made and a report submitted certifying compliance with specified tolerances.

D. Erection Tolerances: Erection tolerances of anchor rods, embedded items, and all structural steel shall conform to the AISC Code of Standard Practice, Section 7, unless stricter tolerances are specified elsewhere in the contract documents.

E. Temporary Shoring and Bracing:

1. The lateral-load resisting or stability-providing system and connecting diaphragms are identified on the drawings. Comply with the provisions of the Code of Standard Practice regarding stability of the structure during the erection process, except where stricter requirements are noted herein.
2. The Erector shall design and provide all required temporary shoring and bracing to hold structural framing securely in position and to safely withstand all loads as specified in the Code of Standard Practice and ASCE 37 unless larger loads are required by the local building code or specified

herein. Provide all bracing, any additional structural members, and increase member sizes and/or connections shown on the drawings as required to accommodate the erection loads, methods, sequence of erection, and equipment until the lateral-load resisting or stability-providing system is completely installed. Clearly show all temporary supports and modifications to designed members on the Shop Drawings and the Erection-bracing Drawings. A qualified licensed professional engineer, hired by the Erector, shall design the temporary shoring and bracing and shall seal the erection-bracing drawings.

3. Where architectural or MEP requirements do not allow for any temporary supports, members, erection devices, or connections to be left in place permanently or where such items affect the final structural behavior, they shall be removed by the erector. All costs associated therewith shall be included in the bid price.

F. Wherever the erection equipment is supported by the structure, the Contractor shall be responsible for the retention of a licensed professional engineer to determine the adequacy of the member supporting the erection equipment in relation to the loads imposed thereon. The Contractor shall submit to the Architect/Engineer, for review, the loads that will be imposed by the erection equipment on the building structure. Where the imposed load exceeds the allowable strength, the Contractor shall be responsible for any additional materials, supports, bracing, connections and similar measures required to support the imposed load of the equipment while in use, subject to review by the Architect/Engineer.

G. Anchor Rods: Furnish anchor rods and other connectors required for securing structural steel to foundations and other in-place work. Furnish 1/8" minimum steel templates for presetting bolts and other anchors to accurate locations. Tighten anchor rods after supported members have been positioned and plumbed. Do not remove wedges or shims, but if protruding, cut off flush with edge of base or bearing plate prior to packing with grout. Use only steel wedges or shims.

H. Base Plates and Bearing Plates: Remove loose latent material from bearing surfaces and base and bearing plates. Set plates to the elevation indicated on the drawings and level using steel shims (plastic shims will not be allowed) or by three leveling screws with weldments at the plate edges. After all protruding plates have been trimmed, grout plates solidly between bearing surfaces using the specified grout, ensuring no voids are present. Finish exposed surfaces, protect installed materials, and allow to wet cure. For proprietary grout materials, comply with manufacturer's instructions. Tighten anchor bolts after supported members have been positioned and plumbed.

I. Splices: Splices will be permitted only where indicated on the contract drawings and approved shop drawings. Fastenings of splices of compression members shall be done after the abutting surfaces have been brought completely into contact within AISC tolerances. Bearing surfaces and surfaces that will be in permanent contact are to be cleaned before the members are assembled.

J. Field Assembly of Structural Steel:

1. As erection of the steel progresses, the work shall be fastened securely to safely carry all dead load, wind and erection forces. Particular care shall be exercised to ensure straightness and tautness of bracing immediately upon raising a steel column.
2. Provide temporary planking and working platforms as necessary to effectively complete work.
3. Set structural frames accurately to lines and elevations indicated. Align and adjust various members forming part of complete frame or structure before permanently fastening. Clean bearing surfaces and other surfaces which will be in permanent contact before assembly. Perform necessary adjustments to compensate for discrepancies in elevations and alignment. Level and plumb individual members of structure within specified AISC tolerances. The Contractor shall coordinate with Erector and Fabricator regarding possible discrepancies in member lengths between temperature at time of fabrication and temperatures during erection, and shall make necessary adjustments to ensure plumbness within AISC tolerances at 70°F. Compensate for cumulative welding draw, construction loadings, sequential applications of dead loads, or any other predictable conditions that could cause distortions to exceed tolerance limitations.
4. On welded construction exposed to view or weather, remove erection bolts, fill holes with plug welds or filler and grind smooth at exposed surfaces.
5. Comply with AISC Specifications for bearing, adequacy of temporary connections, alignment, and removal of paint on surfaces receiving field welds.
6. Comply with all bolting and welding requirements of Part 2 of this specification section.

K. Field Modifications to Structural Steel: Errors in shop fabrication or deformation resulting from handling and transportation that prevent the proper assembly and structural fitting of parts shall be reported

immediately to the Architect/Engineer, and approval of the method of correction shall be obtained. Approved corrections shall be made at no additional cost to the Owner. Do not use cutting torches, reamers, or other devices in the field for unauthorized correction of fabrication errors.

L. Miscellaneous Framing: Provide supplemental structural steel support framing for steel deck where columns, or other framing members or floor openings interrupt normal deck bearing whether shown or not on the architectural, mechanical, or structural drawings.

M. Removal of Erection Aids and Devices: The erector shall remove all erection aids and devices that interfere with architectural finish or MEP requirements.

N. Field Touch-Up Painting:

1. Clean field welds, unpainted areas of bolted connections (including all exposed areas of nuts, bolts, washers, filler plates, member end supplement plates, and welds), and any shop painted areas that are abraded. Apply paint to all exposed areas using same material and surface preparation as used for shop painting. Apply by brush or spray to provide minimum dry film thickness of 1.5 mils.
2. Clean field welds, ungalvanized areas of bolted connections (including all exposed areas of nuts, bolts, washers, filler plates, member end supplement plates, and welds), and any galvanized areas that are abraded. Prepare surfaces and apply specified galvanizing repair paint in accordance with ASTM A 780.
3. The Contractor shall ensure that, at the substantial completion of the project, all structural steel, bolted and/or welded, required to be painted shall have all necessary steel surfaces painted (including touch-up painting as required) to prevent corrosion bleeding.

O. Headed Stud Anchor Installation:

1. Steel Plates Embedded in Concrete:

a. Studs shall be welded using automatically timed stud welding equipment.
b. Plates must be unpainted and free of heavy rust, mill scale, dirt, sand or other foreign material that will interfere with the welding operation.

P. Clean Up: Clean up all debris caused by the Work of this Section, keeping the premises neat and clean at all times.

3.2 QUALITY ASSURANCE TESTING AND INSPECTION DURING CONSTRUCTION

A. Refer to Specification 01 45 29 “Structural Testing and Inspections” for inspection requirements associated with Structural Steel Framing.

END OF SECTION 051200

SECTION 052100 - STEEL JOIST FRAMING

PART 1 - GENERAL

1.1 RELATED DOCUMENTS

A. Drawings and general provisions of Contract, including General and Supplementary Conditions and Division-01 Specification sections, apply to work of this section.

1.2 SCOPE OF WORK

A. Extent of steel joists is shown on drawings, including basic layout and type of joists required.

B. Quantity of joists required shall be determined from the contract drawings.

C. Purchase products and systems selected by Architect from the designated supplier.

1.3 QUALITY ASSURANCE

The Contractor is responsible for quality control, including workmanship and materials furnished by his subcontractors and suppliers.

A. Qualifications: The steel joist manufacturer shall be a firm experienced in manufacturing joists similar to those indicated for this Project. The manufacturer must be certified by SJI to manufacture joists complying with SJI standard specifications and load tables.

B. Design and Fabrication: Provide joists designed and fabricated in compliance with the following, and as herein specified.
1. Steel Joist Institute (SJI) Standard Specifications, Load Tables and Weight Tables for K and LH,/ DLH Series Steel Joists and Joist Girders, adopted November 4, 1985, Revised May 1, 2000.
2. Recommended Code of Standard Practice for Steel Joists and Joist Girders, adopted April 7, 1931, Revised May 1, 2001.
3. Local fabrication requirements of governing authorities such as the city, county and state having jurisdiction over the site where the project is located.
4. SJI Technical Digest #8 "Welding of Open Web Steel Joists"
5. Comply with all OSHA requirements.

C. Qualification of Field Welding: Qualify welding processes and welding operators in accordance with American Welding Society (AWS) qualification procedure.

1.4 SUBMITTALS

A. Qualification Data: Submit evidence of compliance with the requirements listed in section 1.03 A.

B. Shop Drawings: Submit detailed drawings showing layout of joist units, connections, jointing and accessories. Include length, camber, mark, number, type, location and spacing of joists and bridging. Submit details for member splices.

C. Provide templates or location drawings for installation of anchorage devices and bearing plates in other construction materials.

D. Mill Certificates: Submit mill reports for the structural steel used in the joists and for the bolts certifying compliance with specified requirements.

1.5 SHOP INSPECTION

A. The manufacturer's quality assurance inspector shall inspect joists before shipment to insure compliance of materials and workmanship with the documents specified in this specification. In addition, an independent testing laboratory, if requested by the Owner, shall inspect the joist fabrication at the shop. Cooperate with the Owner's testing laboratory and inspectors in all tests and inspections. Repair any defects found prior to shipment of the joists.

1.6 PRODUCTS

A. Testing and inspecting allowances include the cost of engaging testing agencies, actual tests and inspections, and reporting results.

B. The allowance does not include incidental labor required to assist the testing agency or costs for retesting if previous tests and inspections result in failure. The cost for incidental labor to assist the testing agency shall be included in the Contract Sum.

C. Costs of services not required by the Contract Documents are not included in the allowance.

D. At Project closeout, credit unused amounts remaining in the testing and inspecting allowance to Owner by Change Order.

PART 2 - PRODUCTS

2.1 MATERIALS

A. Steel: Comply with SJI specifications for chord and web members

B. Steel Bearing Plates: ASTM A 36

C. Unfinished Threaded Fasteners: ASTM A307, Grade A, regular hexagon type, low carbon steel.

D. High-Strength Threaded Fasteners: ASTM A 325 heavy hexagon structural bolts with nuts and hardened washers.

E. Steel Prime Paint: Comply with SJI specifications.

2.2 FABRICATION

A. General: Fabricate steel joists in accordance with all documents listed in "Quality Assurance", except as noted below.

B. Splices in Chord Members: All splices shall be designed and provided in accordance with SJI Specifications. The splices in each of the two angles or bars of all members shall not be at the same location, but shall be staggered a minimum of 6 inches.

C. Holes in Chord Members: Provide holes in chord members where shown in contract drawings for securing other work to steel joists; however, deduct area of holes from the area of chord when calculating strength of member.

D. Joists shall be cambered for dead loads: Provide all joists with SJI standard camber unless specified otherwise on the drawings. Review the Structural Drawings and Specifications for information concerning dead loads for joists requiring other than standard camber. Joist camber must be shown on shop drawings submitted for review. Not showing camber information on shop drawings shall be cause for rejection of shop drawings.

E. Joist Bearing: Provide minimum end bearing of joists as required by SJI specifications but subject to requirements below: Provide sloped shoes if joist slope exceeds ¼ inch per 12 inches (1:48).
   1. Joists Less than 60-Foot Span:
      a. If two joists do not abut each other at a support, provide required joist bearing centered on the supporting member unless detailed otherwise on the drawings.
      b. If two joists abut each other at a support and sufficient minimum bearing for each joist exists, provide 1/4" space between joist ends centered over the support unless detailed otherwise on the drawings.
      c. If two joists abut each other at a support and sufficient minimum bearing for each joist does not exist at the support, offset the ends of each joist and center joist bearing on the center of the support.
   2. Joists Greater than or Equal to 60-Foot Span: All joists having a span greater than or equal to sixty feet must have required minimum bearing centered over the support. Joists abutting each other at a support must be offset at the bearing end to satisfy this requirement.

F. Top Chord Extensions and Extended Ends: Provide top chord extensions and extended ends on joists where shown in contract drawings complying with the requirements of SJI specification and load tables.

G. Ceiling Extensions: Provide ceiling extensions in areas having ceilings attached directly to joist bottom chord. Provide either an extended bottom chord element or a separate unit, to suit manufacturer's standards, of sufficient strength to support ceiling construction. Extend ends to within 1/2" of finished wall surface unless otherwise indicated.

H. Bridging: Provide horizontal and/or diagonal type bridging for all joists, complying with SJI specifications at a minimum.
   1. Examine the drawings carefully for special bridging requirements such as may be required to resist net uplift forces as shown on the drawings or to provide special bracing.
   2. Provide bridging anchors for ends of bridging lines terminating at walls or beams.

I. End Anchorage: Provide end anchorages to secure joists to adjacent construction, complying with SJI specifications, unless otherwise indicated.

J. Header Units: Any situation requiring heading of joists not shown on the structural drawings shall be referred to engineer for framing.

K. Shop Painting: Remove loose scale, heavy rust, grease, oil and other foreign materials from fabricated joists and accessories by rotary wire brushes and/or solvents before application of shop paint.

Apply one shop coat of primer paint to steel joists and accessories, by spray, dipping, or other method to provide a continuous dry paint film thickness of not less than 0.50 mil.

PART 3 - EXECUTION

3.1 ERECTION

A. Place and secure steel joists strictly in accordance with SJI code of standard practice, SJI specifications, final shop drawings, and as herein specified.

B. Placing Joists: Do not start placement of steel joists until supporting work is in place and secured. Place joists on supporting work, adjust and align in accurate locations and spacing before permanently fastening.
   1. Comply with SJI specifications regarding required bridging, connections, and anchors to ensure lateral stability during construction. Remove as required for architectural, structural, and mechanical clearances after erection.
   2. Where members support joists from both sides and the supporting width does not meet the SJI recommendations for bearing lengths of both joists, the joists shall be offset to provide recommended bearing lengths. Such offsets shall be subject to approval by the Architect/Engineer.

C. Bridging: Install bridging simultaneously with joist erection, before construction loads are applied. Anchor ends of bridging lines at top and bottom chords where terminating at walls or beams.

3.2 ANCHORING JOISTS

A. Anchor steel joists to supporting steel framework with welds, bolts, or a combination of the two in accordance with SJI specifications for type of joists used. Joists on column lines shall be field bolted with high-strength threaded fasteners installed snug tight.

B. Joists where shown with bottom chord extensions shall not have the bottom chords connected to the supporting members until the full dead load is applied.

C. Anchor joists resting on masonry or concrete to steel bearing plates embedded therein with welds, bolts, or a combination of the two in accordance with SJI specifications for type of joists used.

D. Touch-Up Painting: After joist installation, paint field bolt heads and nuts, welded areas, and abraded or rusty surfaces on joists and steel supporting members. Wire brush surfaces and clean with solvent before painting. Use same type of paint as used for shop painting.

3.3 ATTACHMENTS TO JOISTS

A. The Contractor shall ensure that no cuts or holes are made in the members of the erected joists for attachment of ceiling, ducts, pipes, or any other items not specifically shown in the contract drawings. Use of power driven fasteners in the diagonal and bottom chord members of the joists is prohibited.

B. The Contractor shall not hang any elements from the top or bottom chords of joists except ceiling, ducts, pipes or other items specifically shown on the Contract Documents, without the written authorization of the Engineer.

All pipes, ducts, and other mechanical, electrical, and plumbing equipment suspended from the joists' top or bottom chord and producing hanger loads exceeding 60 pounds shall have the hanger attached at a joist panel point only except if the chord member is stiffened according to the typical detail shown on the drawings.

All ceilings hung from the joists and producing a concentrated load of 60 pounds or less may have the grid hung anywhere along the bottom chord. Hung ceilings producing more than a 60 pound concentrated load shall have the grid hung only at joist panel points except if the chord member is stiffened according to the typical detail shown on the drawings.

Heavy pipes, ducts, or other equipment hung from joists may require additional reinforcement and shall be referred to the Engineer for framing

3.4 FIELD INSPECTION

A. Joists welded in place are also subject to inspection and testing. Remove and replace work found to be defective and provide new acceptable work at no cost to Owner. Expense of removing and replacing any portion of the steel joists for testing purposes will be borne by the Owner if welds are found to be satisfactory.

END OF SECTION - 052100

SECTION 053113 - STEEL FLOOR DECKING

PART 1 - GENERAL

1.1 RELATED DOCUMENTS

Drawings and general provisions of the contract, including General and Supplementary Conditions and Division 01 - Specification sections, apply to work of this section.

1.2 STANDARDS

The following Standards are listed in this specification:

ASTM A611	Standard Specification for Structural Steel (SS), Sheet, Carbon, Cold-Rolled
ASTM A653	Standard Specification for Steel Sheet, Zinc-Coated (Galvanized) or Zinc-Iron Alloy-Coated (Galvannealed) by the Hot-Dip Process

1.3 SCOPE OF WORK

A. Supplier: The metal deck supplier shall furnish all metal deck materials and accessories indicated on the Architectural, Structural, and Mechanical Drawings required to produce a complete job including but not necessarily limited to deck units, cover plates, pour stops, hanger slots or clips, metal deck edge closures, cell closures, and all related accessories.

B. Erector: The Subcontractor responsible for erecting the metal deck shall provide all labor and equipment as required to place all metal deck components and accessories as described above.

1.4 QUALIFICATIONS

The metal deck supplier shall be a manufacturer with a minimum of two years successful experience and with a minimum of two successful jobs of a comparable size and scope to this project.

1.5 QUALITY ASSURANCE

The Contractor is responsible for quality control, including workmanship and materials furnished by his subcontractors and suppliers.

A. Codes and Standards: Comply with provisions of the following codes and standards except as otherwise indicated or specified:

1. "Design Manual for Composite Decks, Form Decks, and Roof Decks", as published by the Steel Deck Institute (SDI).

2. "Specification for the Design of Cold Formed Steel Structural Members", as published by the American Iron and Steel Institute (AISI).

3. "Structural Welding Code – Sheet Steel", D1.3, as published by the American Welding Society (AWS).

B. Qualification of Field Welding: Qualify welding processes and welding operators in accordance with AWS procedures.

C. Underwriters Label: Provide metal deck units which are listed and conform to Underwriters Laboratories "Fire Resistance Directory", with each deck unit bearing the UL label and marking for specific system detailed.

1.6 SUBMITTALS

A. Product Certification: Submit manufacturer's specifications and installation instructions for each type of deck specified. Also submit a certificate of product compliance with SDI Standards as specified.

B. Shop Drawings: Submit detailed shop drawings showing type of deck, complete layout, attachment details, closures, edge strips, pans, deck openings, special jointing, supplementary framing, and all other accessories.

PART 2 - PRODUCTS

2.1 GENERAL REQUIREMENTS

See the drawings for location of metal deck types and for depth of deck, design deck properties, design deck yield strength, concrete type, total slab thickness, slab reinforcing, and design superimposed loads. The average rib width to depth of deck ratio shall be greater than or equal to 2.0. The deck properties specified are the values used for the design of the deck shown on the drawings. The deck manufacturer shall be responsible for designing the deck if any one of the proposed deck properties other than depth are less than the minimum or design values stated. The design shall include the ability to carry the construction dead loads and design superimposed loads indicated for all the spans shown on the drawings and to meet all performance criteria as specified by the SDI. Fabricate panels, with integrally embossed or raised pattern ribs and interlocking side laps, to comply with “SDI Specifications and Commentary for Composite Steel Floor Deck”.

Acceptable manufacturers include the following:

Canam Steel Corp.
Consolidated Systems, Inc.
DACS, Inc.
Marlyn Steel Decks, Inc.
United Steel Deck, Inc.
Valley Joist/Div. Ebsco Industries, Inc.
Verco Manufacturing Co.
Vulcraft/Div. Nucor Corp.
Wheeling Corrugating Co.

Other manufacturers may be used only with Architect/Engineer approval.

2.2 GRADE OF STEEL

Composite metal deck shall be cold formed from steel sheets conforming to ASTM A611 Grade C or D or ASTM A653, Structural Steel Grade, with a minimum yield strength of 40 ksi. The delivered thickness of the uncoated steel shall not be less than 95% of design thickness. Sheet metal accessories shall conform to the same material specification as the deck product.

2.3 FINISH

A. Galvanized: Composite metal deck shall be galvanized with a protective zinc coating conforming to ASTM A653 G90.

B. Galvanizing Repair Paint: High zinc-dust content paint for repair of damaged galvanized surfaces complying with Department of Defense Specifications DOD-P-21035.

2.4 RELATED PRODUCTS

A. Flexible Closure Strips: Provide manufacturers standard vulcanized closed cell, synthetic rubber.

B. Acoustic Sound Barrier Closures: Provide manufacturers standard mineral fiber closures.

2.5 FABRICATOR

A. Metal Deck Spans: The deck properties shown on the drawings are selected so that the spans do not exceed the maximum clear spans with unshored construction as required by SDI criteria unless indicated otherwise on the drawings. The deck manufacturer shall be responsible for supplying a deck that meets that criterion. Where possible, all metal deck shall extend over three or more spans. Simple span deck will not be permitted unless it is shored at midspan. Any additional concrete topping specified over the composite slab shall be placed after the slab has reached 75% of its design strength.

B. Cell Closure at Ends of Metal Deck Flutes: Fabricate metal closure strips of not less than 0.0358" minimum (20 gage) cold formed sheet steel. Form to provide tight fitting cell closures at open ends of cells or flutes to prevent wet concrete from leaking through open cells.

C. Pour Stop Closures at Slab Edges: Provide sheet metal pour stop closures at all slab edges, columns, walls, and openings unless steel angles or bent plates are specified in details on the drawings. The closures shall be fabricated from light gage steel not less than the thickness shown in the table below when the slab edge is parallel to the deck span. Provide a return lip on the vertical leg in accordance with the SDI Design Manual. The overhang dimension is measured from the edge of the flange to the edge of the slab.

Overhang =	0”-2”	2”-4”	4”-6”	6”-8”	8”-10”
Slab Thickness					
5.25	18	16	14	12	10
6.25	16	14	12	12	10
6.5	16	14	12	12	10
8.0	12	12	10	10	NA

2.6 COMPOSITE SLAB REINFORCEMENT

See drawings for reinforcement in composite slabs. See Section 03 30 00, “Cast-in-Place Concrete”, for minimum reinforcement requirements.

2.7 OPENINGS IN METAL DECK

For unframed openings, provide blockout in slab for opening with deck uncut. Cut deck at opening after concrete has reached 75% of its design strength. See Section 03 20 00, “Concrete Reinforcement”, for reinforcing in the slab around all unframed openings in metal deck that are greater than 10" in width in either direction.

2.8 CHLORIDE ADMIXTURES

The use of admixtures in concrete containing chloride salts shall not be permitted for metal deck concrete.

2.9 EXTRA CONCRETE REQUIRED BY DECK DEFLECTION

The General Contractor shall include in his bid additional concrete required for metal deck slabs to account for deck deflection.

PART 3 - EXECUTION

3.1 INSTALLATION

A. General: Install deck units as accessories in accordance with manufacturers recommendations and approved shop drawings, and as specified herein:

1. Place deck units on supporting framework and adjust to final position with ends accurately aligned and bearing 1 1/2" minimum on supporting members before being permanently fastened. Do not stretch or contract side lap interlocks.

2. Place deck units in straight alignment for entire length of run of cells and with close alignment between cells at ends of abutting units.

3. Place deck units flat and square, secured to adjacent framing without warp or excessive deflection.

4. Do not place deck units on concrete supporting structure until concrete has cured and is dry.

5. Coordinate and cooperate with structural steel erector in locating decking bundles to prevent overloading of structural members.

6. Do not use floor deck units for storage or working platforms until permanently secured.

B. Attachment of Composite Deck:

1. Typical Welding of Deck: Metal deck units shall be welded to the structural support members with 5/8" ϕ puddle welds at each end of sheet and each intermediate support at each low flute, unless more frequent attachment is specified on the drawings. Where two deck units abut each other, each unit shall be so welded.

2. Side Laps: Unless noted otherwise on the drawings, side laps of adjacent units shall be fastened by welding (1-1/2 inch long), sheet metal screws (No. 10 or larger) or button punching at maximum intervals not exceeding the lesser of ½ of the span or 36".

3. Welding to Girder: Metal deck units shall be welded to girders (steel framing that is parallel to span of deck) with 5/8" ø puddle welds at 12" o.c. If the metal deck is not continuous across the girder, the deck on each side of the girder shall each be welded to the girder with 5/8" ø puddle welds at 12" o.c.

4. Welding Washers: Welding washers shall be used when welding steel deck units less than 0.028" thickness.

5. Welding of Composite Deck used on Roof: In addition to the minimum attachment specified above, typical areas of the roof deck shall be welded to resist the net uplift pressures as specified in the General Notes on the drawings

6. Minimum Bearing: Provide a minimum deck bearing of 1 1/2" over all supports with butted end joints.

C. Welding Requirements: Comply with AWS requirements and procedures for manual shielded metal arc welding, appearance and quality of welds, and methods used in correcting welding work.

D. Cutting and Fitting: Cut and neatly fit deck units and accessories around other work projecting through or adjacent to the decking.

E. Reinforcement at Openings: Provide additional metal reinforcement and closure pieces as required for strength, continuity of decking, and support of other work.

F. Hanger Slab or Clips: Provide UL approved punched hanger slots between cells or flutes of lower element where floor deck units are to receive hangers for support of ceiling construction, air ducts, diffusers, or lighting fixtures.

1. Hanger clips designed to clip over male side lap joints of floor deck units may be used instead of hanger slots.

2. Locate slots or clips at not more than 14" o.c. in both directions, not over 9" from walls at ends, and not more than 12" from walls at sides, unless otherwise shown.

3. Provide manufacturer's standard hanger attachment devices.

4. Loads hanging from metal deck slabs shall not exceed 100 pounds unless specifically detailed otherwise on the drawings.

G. Joint Covers and Cell Closures: Weld steel sheet joint covers at abutting ends, except where taped joints are specified. Weld steel sheet column closures, cell closures and Z-closures to deck with 1" long weld at 12" maximum centers to provide tight-fitting closures at open ends of ribs, unless shown otherwise on the drawings.

H. Pour Stops and Girder Fillers: Weld steel sheet pour stops and girder fillers to supporting structure according to SDI recommendations, unless otherwise indicated. Provide minimum 2" bearing over steel support.

3.2 TOUCH-UP PAINTING

After deck installation, wire brush, clean and paint scarred areas, welds and rust spots on top and bottom surfaces of decking units and supporting steel members.

Touch-up galvanized surfaces with galvanizing repair paint applied in accordance with manufacturer's instructions.

Touch-up painted surfaces with same type of shop paint used on adjacent surfaces.

In areas where shop-painted surfaces are to be exposed, apply touch-up paint to blend into adjacent surfaces.

3.3 INSPECTION

Welded decking in place is subject to inspection and testing by the Owner's Testing Laboratory. Expense of removing and replacing portions of decking for testing purposes will be borne by Owner if welds are found to be satisfactory. Remove work found to be defective and replace with new acceptable work. Cost of such removal and replacement shall be borne by the Contractor.

END OF SECTION 053113

SECTION 053123 - STEEL ROOF DECKING

PART 1 - GENERAL

1.1 RELATED DOCUMENTS

A. Drawings and general provisions of the contract, including General and Supplementary Conditions and Division 01 Specification sections, apply to work of this section.

1.2 SCOPE OF WORK

A. Supplier: The steel deck supplier shall furnish all steel deck materials and accessories indicated on the Architectural, Structural, and Mechanical Drawings required to produce a complete job including but not necessarily limited to deck units, cover plates, steel deck edge closures, cell closures, cant strips, sump pans, and all related accessories.

B. Erector: The Subcontractor responsible for erecting the steel deck shall provide all labor and equipment as required to place all steel deck components and accessories as described above.

1.3 QUALIFICATIONS

A. The steel deck supplier shall be a manufacturer with a minimum of two years successful experience and with a minimum of two successful jobs of a comparable size and scope to this project.

1.4 QUALITY ASSURANCE

A. The Contractor is responsible for quality control, including workmanship and materials furnished by his subcontractors and suppliers.

B. Codes and Standards: Comply with provisions of the following codes and standards except as otherwise indicated or specified:

1. SDI, "Design Manual for Composite Decks, Form Decks, and Roof Decks."
2. AISI, "Specification for the Design of Cold Formed Steel Structural Members."
3. AWS D1.3, "Structural Welding Code – Sheet Steel."

C. Qualification of Field Welding: Qualify welding processes and welding operators in accordance with AWS procedures.

D. Underwriters Laboratories Classifications:

1. Provide steel deck units which are listed and conform to Underwriters Laboratories "Fire Resistance Directory", with each deck unit bearing the UL label and marking for specific fire-resistant system detailed.
2. Provide units and construction meeting the requirements of Construction No. 157 as listed in the 2000 UL “Roofing Materials & Systems Directory” under Roof Deck Constructions (TGKX) and rated as a Class 90 assembly. and with each deck unit bearing the UL label and marking for specific wind-rated system detailed.

E. Factory Mutual Listing: Provide steel roof deck units which have been evaluated by Factory Mutual Research Corporation and are listed as an approved product in "Factory Mutual Research Approval Guide 2006- Building Materials."

1.5 SUBMITTALS

A. Product Certification: Submit manufacturer's specifications and installation instructions for each type of deck specified. Also submit a certificate of product compliance with SDI Standards as specified.

B. Shop Drawings: Submit detailed shop drawings showing type of deck, complete layout, attachment details, closures, edge strips, supplementary framing, and all other accessories.

C. Insurance Certification: Assist Architect and Owner in preparation and submittal of roof installation acceptance certification as may be necessary in connection with fire, windstorm, and extended coverage insurance.

D. Welding Certificates: Submit Copies of certificates for welding procedures and personnel.

PART 2 - PRODUCTS

2.1 GENERAL REQUIREMENTS

A. See General Notes on the drawings for the location, depth of deck, design thickness, and type of deck required.

B. Acceptable manufacturers include:
1. ASC Steel Deck.
2. Canam Group.
3. Consolidated Systems, Inc.
4. Cordeck.
5. Epic Metals Corp.
6. Loadmasters Systems, Inc.
7. Marylyn Steel Decks, Inc.
8. New Millennium Building Systems, Inc.
9. United Steel Deck, Inc.
10. Valley Joist, Inc.
11. Verco Manufacturing Co.
12. Vulcraft/Div. Nucor Corp.
13. Wheeling Corrugating Co.
14. Other manufacturers may be used only with Architect/Engineer approval.

2.2 GRADES OF STEEL

A. Steel deck shall be manufactured from steel conforming to ASTM A1008 Grades C, D, or E for painted deck or A653, Structural Steel Grade for galvanized deck or Engineer approved equal, having a minimum yield strength of 33,000 PSI.

2.3 FINISH

A. Galvanizing: Steel deck shall be galvanized with a protective zinc coating conforming to ASTM A653 G90.

B. Galvanizing Repair Paint: High zinc-dust content paint for repair of damaged galvanized surfaces complying with Department of Defense Specifications DOD-P-21035.

2.4 ROOF DECK ACCESSORIES

A. Provide minimum 20 gauge ridge and valley plates, minimum 20 gauge cant strips, minimum 14 gauge sump pans, minimum 20 gauge inside or outside closure channels angles or plates, minimum 20 gauge butt strips at change of deck directions, and minimum 20 gauge filler sheets.

2.5 MECHANICAL FASTENERS

A. Powder-Actuated or Pneumatically Driven Pins: Provide corrosion-resistant, powder-actuated or pneumatically driven fasteners manufactured from steel conforming to AISI 1060 or 1061 steel, austempered to a core hardness of 52 to 58 Rockwell C. Fasteners shall have a knurled shank and shall be zinc-plated in accordance with ASTM B633, Sc. I, Type III.

1. Subject to compliance with requirements, provide products of one of the following manufacturers:

a. Hilti, Inc.
b. ITWBuildex.
c. Pneutek, Inc.

B. Self-Drilling Screw Fasteners: Provide corrosion-resistant, hexagonal head, steel self drilling screws, austempered to a core hardness of Rockwell C 50.

1. Subject to compliance with requirements, provide products of one of the following manufacturers:

a. ITWBuildex.
b. Grabber Construction Products.
c. SFS Intec Fastening Systems, Inc., Wyomissing.
d. Textron Fastening Systems.

2.6 SIDE-LAP FASTENERS:

A. Provide Corrosion-resistant, hexagonal washer head; self-drilling, carbon-steel screws, No. 10 minimum diameter.

2.7 FABRICATION

A. General: Fabricate deck panels, without top-flange stiffening grooves, to comply with “SDI Specifications and Commentary for Steel Roof Deck”, in SDI Publication No. 29, and the following.

B. Steel Deck Spans: Where possible, all steel deck shall extend over three or more supports. Single span deck is prohibited.

2.8 ROOF OPENINGS

A. Provide a 20 gage galvanized flat plate to reinforce openings in roof deck that are greater than 6” and less than 10” in any one direction.

B. Refer to drawings for opening that are larger than 10” in any one direction.

PART 3 - EXECUTION

3.1 INSTALLATION

A. General: Install deck units and accessories in accordance with manufacturers recommendations and approved shop drawings, and as specified herein:

1. Place deck units on supporting framework and adjust to final position with accurately aligned side laps and ends bearing 2" minimum on supporting members before being permanently fastened. Do not stretch or contract side lap interlocks. Place the end joint over a chord angle for deck bearing on steel bar joists.
2. Place deck units in straight alignment for entire length of run of cells and with close alignment between cells at ends of abutting units.
3. Place deck units flat and square, secured to adjacent framing without warp or excessive deflection.
4. Do not place deck units on concrete supporting structure until concrete has cured and is dry.

5. Coordinate and cooperate with structural steel erector in locating decking bundles to prevent overloading of structural members.
6. Do not use roof deck units for storage or working platforms until permanently secured.

B. Attachment of Roof Deck:

1. The method of attachment, attachment pattern, and side lap fastener type and spacing shall be as shown on the drawings and comply with the requirements noted below.
2. Method of Attachment: The attachment method noted in the drawings shall comply with the applicable requirements below.

    a. Welding: Comply with AWS requirements and procedures for manual shielded metal arc welding, appearance and quality of welds, and methods used in correcting welding work. Weld metal shall penetrate all layers of deck material at end laps and side joints and shall have good fusion to the supporting member. Welding washers shall be used only when welding steel deck less than 0.028" thickness. The diameter of the puddle weld on the supporting member shall be, at a minimum, the diameter stated in the drawings but no less than 1/2 inch.
    b. Powder-Actuated or Pneumatically Driven Pins: An operator licensed by the pin manufacturer shall install all pins. Comply with the manufacturer's requirements to install the pins through all layers of the deck material and the manufacturer’s required embedment into the supporting member.
    c. Self-Drilling Fasteners: Comply with the manufacturer's requirements to install the screws through all layers of the deck material and the manufacturer's required embedment into the supporting member.

3. Side Lap Fastening: Unless required otherwise by provisions of this specification, side laps of adjacent units shall be fastened by #10 (min.) TEK screws so that spacing between supports and fasteners does not exceed the value prescribed on the drawings. Button Punching is not allowable as a side-lap fastener.
4. End Bearing: Provide a minimum end bearing of 2" over supports.
5. End Joints: End joints of sheets shall be lapped 2” minimum over supports. Decks that slope 1/4 inch or more in 12 inches in the long direction shall be erected beginning at the low side to insure that end laps are shingle fashion.
6. Underwriters Laboratories Wind Uplift Classification Requirements: Unless a more stringent attachment requirement is specified elsewhere in this specification or on the drawings, roof deck units shall be attached to the supporting structure as required by the Construction Number specified elsewhere in this section.
7. Attachment to Girders: At locations noted in the drawings, attach the deck to steel members that are parallel to the deck flutes in accordance with the requirements noted in the drawings.

C. Cutting and Fitting: Cut and neatly fit deck units and accessories around other work projecting through or adjacent to the decking.

D. Reinforcement at Openings: Roof openings less than 6" square or diameter require no reinforcement. Openings 6" to 10" inclusive shall be reinforced with a 20 gauge galvanized plate welded to the deck at each corner and 6" maximum centers with a 5/8" diameter puddle weld or sheet metal screws. For openings greater than 10" in diameter or width, refer to the drawings and structural steel specifications for additional framing to support the deck around the opening.

E. Roof Sump Pans and Sump Plates: Install over openings provided in roof decking and weld flanges to top of deck. Space welds not more than 12 inches apart with at least 1 weld in each corner.

F. Joint Covers: Provide steel joint covers at changes in direction of deck units, except where taped joints are specified.

G. Miscellaneous Roof Deck Accessories: Install ridge and valley plates, finish strips, cover plates, and reinforcing channels according to deck manufacturer’s written instructions. Weld to substrate to provide a complete deck installation.

3.2 TOUCH-UP PAINTING

A. After deck installation, wire brush, clean and paint scarred areas, welds and rust spots on top and bottom surfaces of decking units and supporting steel members.

B. Touch-up galvanized surfaces with galvanizing repair paint applied in accordance with manufacturer's instructions.

3.3 QUALITY ASSURANCE INSPECTION DURING CONSTRUCTION

A. The method of attaching the deck to the frame is subject to inspection by the Owner’s designated Testing Laboratory. The Contractor shall, at its own expense, remove work found to be defective and replace with new acceptable work.

B. The Owner shall engage a qualified testing and inspection agency (The Owner’s Testing Laboratory) to perform the following inspections and prepare reports.

1. Welding or Self-drilling Fasteners

a. Visually inspect 100% of the attachment of the steel deck to the structural frame and at side laps.
b. Periodically monitor the method of attaching the steel deck to the structural frame.

2. Powder-actuated or pneumatically-driven pins

a. Visually inspect 100% of the Powder-Actuated or Compressed-Air fasteners using an inspection gauge supplied by the manufacturer to verify that the stand-off distance from the top of the deck is in accordance with the manufacturer's requirements.

END OF SECTION

SECTION 054000 - COLD-FORMED METAL FRAMING

PART 1 - GENERAL

1.1 RELATED DOCUMENTS

A. Drawings and general provisions of the Contract, including General and Supplementary Conditions and Division 01 Specification Sections, apply to this Section.

1.2 SUMMARY

A. Section Includes:
   1. Load-bearing wall framing.
   2. Exterior non-load-bearing wall framing.
   3. Floor joist framing.
   4. Roof rafter framing.
   5. Ceiling joist framing.
   6. Soffit framing.

1.3 PREINSTALLATION MEETINGS

A. Preinstallation Conference: Conduct conference at Project site.

1.4 ACTION SUBMITTALS

A. Product Data: For each type of cold-formed steel framing product and accessory.
B. Shop Drawings:
   1. Include layout, spacings, sizes, thicknesses, and types of cold-formed steel framing; fabrication; and fastening and anchorage details, including mechanical fasteners.
   2. Indicate reinforcing channels, opening framing, supplemental framing, strapping, bracing, bridging, splices, accessories, connection details, and attachment to adjoining work.
C. Delegated-Design Submittal: For cold-formed steel framing.

1.5 INFORMATIONAL SUBMITTALS

A. Sustainable Documentation Submittals:
   1. Recycled Content:
      a. Product data and certification letter indicating percentages by weight of post-consumer and pre-consumer recycled content for products having recycled content.
      b. Include statement indicating costs for each product having recycled content.
   2. Regional Material:
      a. Product data for regional materials (within 500 miles of construction site) indicating location and distance from Project of material manufacturer and point of extraction, harvest, or recovery for each raw material.
      b. Include statement indicating cost for each regional material and the fraction by weight that is considered regional.

1.6 QUALITY ASSURANCE

A. Manufacturer Qualifications: Member in good standing of the Steel Framing Industry Association (SFIA) or be a part of a similar organization that provides verifiable code compliance program.
   1. Products to be certified under an independent third party inspection program administered by an agency accredited by IAS to ICC-ES AC98 IAS Accreditation Criteria for Inspection Agencies.
B. Product Tests: Mill certificates or data from a qualified independent testing agency, or in-house testing with calibrated test equipment indicating steel sheet complies with requirements, including Base-Steel thickness, yield strength, tensile strength, total elongation, chemical requirements, and metallic-coating thickness.
C. Code-Compliance Certification of Studs and Tracks: Provide documentation that framing members are certified according to the product-certification program of the Steel Framing Industry Association (SFIA), or be a part of a similar organization that provides verifiable code compliance program.
D. Comply with AISI Specifications and Standards.

1.7 DELIVERY, STORAGE, AND HANDLING

A. Protect cold-formed steel framing from corrosion, moisture staining, deformation, and other damage during delivery, storage, and handling as required in AISI's "Code of Standard Practice"..

PART 2 - PRODUCTS

2.1 MANUFACTURERS

A. Manufacturers: Subject to compliance with requirements, provide products by one of the following:
1. CEMCO Steel Framing Systems
2. ClarkDietrich Building Systems.
3. MarinoWARE.
4. Steel Network, Inc. (The).

2.2 PERFORMANCE REQUIREMENTS

A. Delegated Design: Engage a qualified professional engineer, as defined in Section 014000 "Quality Requirements," to design cold-formed steel framing.

B. Structural Performance: Provide cold-formed steel framing capable of withstanding design loads within limits and under conditions indicated.
1. Design Loads: As indicated.
2. Deflection Limits: Design framing systems to withstand design loads without deflections greater than the following:
a. Exterior Load-Bearing Wall Framing: Horizontal deflection of 1/360 supporting cement plaster veneer and 1/600 supporting masonry veneer.
b. Exterior Non-Load-Bearing Framing: Horizontal deflection of 1/240 supporting EIFS and ACM veneer, 1/360 supporting cement plaster veneer, and 1/600 supporting masonry veneer.
c. Floor Joist Framing: Vertical deflection of 1/360 for live loads and l/240 for total loads of the span.
d. Roof Rafter Framing: Vertical deflection of 1/240 of the horizontally projected span for live loads.
e. Ceiling Joist Framing: Vertical deflection of 1/240 of the span for live loads and 1/240 for total loads of the span.
3. Design framing systems to provide for movement of framing members located outside the insulated building envelope without damage or overstressing, sheathing failure, connection failure, undue strain on fasteners and anchors, or other detrimental effects when subject to a maximum ambient temperature change of 120 deg F.
4. Design framing system to maintain clearances at openings, to allow for construction tolerances, and to accommodate live load deflection of primary building structure as follows:
a. Upward and downward movement of 3/4 inch or as otherwise indicated on the structural drawings.
5. Design exterior non-load-bearing wall framing to accommodate horizontal deflection without regard for contribution of sheathing materials.

C. Cold-Formed Steel Framing Design Standards: Unless more stringent requirements are indicated, the following shall comply with AISI S100 and AISI S240.
1. Floor and Roof Systems .
2. Wall Studs.
3. Headers.
4. Lateral Design.

D. Fire-Resistance Ratings: Comply with ASTM E 119; testing by a qualified testing agency. Identify products with appropriate markings of applicable testing agency.
1. Indicate design designations from UL's "Fire Resistance Directory" or from the listings of another qualified testing agency.

2.3 COLD-FORMED STEELFRAMING, GENERAL

A. Recycled Content of Steel Products: Postconsumer recycled content plus one-half of pre-consumer recycled content not less than 30 percent.

B. Framing Members, General: Comply with ASTM C 955 for conditions indicated

C. Steel Sheet: ASTM A 1003/A 1003M, Structural Grade, Type H, metallic coated, of grade and coating weight as follows:
1. Grade: As required by structural performance
2. Coating: Non Coastal Areas: CP 60: G60 (Z180), A60 (ZF180), AZ50 (AZM150), or GF30 (ZGF90)

b. Coastal Areas: CP 90: G90 (Z275), AZ50 (AZM150), or GF45 (ZGF135)Steel Sheet for Vertical Deflection Clips: ASTM A 653/A 653M, structural steel, zinc coated, of grade and coating as follows:
1. Grade: As required by structural performanc**e**.

2. Coating: G60 (Z180) typical and G90 (Z275)

2.4 LOAD-BEARING WALL FRAMING

A. Steel Studs: Manufacturer's standard C-shaped steel studs, of web depths indicated, punched, with stiffened flanges, and as follows:
   1. Minimum Base-Steel Thickness: 0.0538 inch.
   2. Flange Width: 1-5/8 inches
B. Steel Track: Manufacturer's standard U-shaped steel track, of web depths indicated, unpunched, with straight flanges, and as follows:
   1. Minimum Base-Steel Thickness: 0.0538 inch.
   2. Flange Width: 1-1/4 inches.
C. Steel Box or Back-to-Back Headers: Manufacturer's standard C-shapes used to form header beams, of web depths indicated, unpunched, with stiffened flanges, and as follows:
   1. Minimum Base-Steel Thickness: 0.0538 inch.
   2. Flange Width: 1-5/8 inches.
D. Headers and Jambs - Heavy-Duty Stud: Manufacturer's proprietary shape used to form header beams and jambs, columns or posts, of web depths indicated, unpunched, with stiffened flanges and as follows:
   1. Product: ClarkDietrich Building Systems; Heavy Duty Stud (HDS) and Header Bracket (HDSC), or comparable product.
   2. Minimum Base-Steel Thickness: Matching steel studs.
   3. Web and Flange Widths, Type HDS: 6 by 3 by 2-1/4 by 3/4 inch (152 by 76.2 by 57.2 by 19.1 mm).
   4. Web and Flange Widths, Type HDSC: 5-7/8 by 3-1/16 by 2 inches (149 by 77.8 by 50.8 mm).

2.5 EXTERIOR NON-LOAD-BEARING WALL FRAMING

A. Steel Studs: Manufacturer's standard C-shaped steel studs, of web depths indicated, punched, with stiffened flanges, and as follows:
   1. Minimum Base-Steel Thickness: 0.0538 inch .
   2. Flange Width: 1-5/8 inches .
B. Steel Track: Manufacturer's standard U-shaped steel track, of web depths indicated, unpunched, with unstiffened flanges, and as follows:
   1. Minimum Base-Steel Thickness: 0.0538 inch .
   2. Flange Width: 1-1/4 inches .
C. Headers and Jambs - Heavy-Duty Stud: Manufacturer's proprietary shape used to form header beams and jambs, columns or posts, of web depths indicated, unpunched, with stiffened flanges and as follows:
   1. Product: ClarkDietrich Building Systems; HDS Heavy Duty Stud and HDSC Header Bracket] [RedHeader PRO, or comparable product.
   2. Minimum Base-Steel Thickness: [0.0329 inch (0.84 mm)] [0.0428 inch (1.09 mm)] [0.0538 inch (1.37 mm)] [0.0677 inch (1.72 mm)] [0.0966 inch (2.45 mm)] [Matching steel studs].
   3. Web and Flange Widths, Type HDS: [3-5/8 by 3 by 1-1/16 by 3/4 inch (92.1 by 76.2 by 27.0 by 19.1 mm)] [6 by 3 by 2-1/4 by 3/4 inch (152 by 76.2 by 57.2 by 19.1 mm)].
   4. Web and Flange Widths, Type HDSC: [3-1/2 by 3-1/16 by 2 inches (88.9 by 77.8 by 50.8 mm)] [5-7/8 by 3-1/16 by 2 inches (149 by 77.8 by 50.8 mm)].
D. Vertical Deflection Clips: Manufacturer's standard clips, capable of accommodating upward and downward vertical displacement of primary structure through positive mechanical attachment to stud web.
   1. Manufacturers: Subject to compliance with requirements, provide products by one of the following:
      a. CEMCO Steel Framing Systems
      b. ClarkDietrich Building Systems.
      c. MarinoWARE.
      d. Steel Network, Inc. (The).
E. Single Deflection Track: Manufacturer's single, deep-leg, U-shaped steel track; unpunched, with unstiffened flanges, of web depth to contain studs while allowing free vertical movement, with flanges designed to support horizontal loads and transfer them to the primary structure, and as follows:
   1. Minimum Base-Steel Thickness: 0.0538 inch .
   2. Flange Width: 1 inch plus twice the design gap for other applications .

2.6 FLOOR JOIST FRAMING

A. Steel Joists: Manufacturer's standard C-shaped steel joists, of web depths indicated, punched, with enlarged service holes, with stiffened flanges, and as follows:
   1. Minimum Base-Steel Thickness: 0.0538 inch .
   2. Flange Width: 1-5/8 inches , minimum.

B. Steel Joist Track: Manufacturer's standard U-shaped steel joist track, of web depths indicated, unpunched, with unstiffened flanges, and as follows:
   1. Minimum Base-Steel Thickness: 0.0538 inch .
   2. Flange Width: 1-1/2 inches , minimum.

2.7 ROOF-RAFTER FRAMING

A. Steel Rafters: Manufacturer's standard C-shaped steel sections, of web depths indicated, with stiffened flanges, and as follows:
   1. Minimum Base-Steel Thickness: 0.0538 inch .
   2. Flange Width: 2 inches , minimum.

2.8 CEILING JOIST FRAMING

A. Steel Ceiling Joists: Manufacturer's standard C-shaped steel sections, of web depths indicated, punched with standard holes, with stiffened flanges, and as follows:
   1. Minimum Base-Steel Thickness: 0.0538 inch .
   2. Flange Width: 2 inches , minimum.

2.9 SOFFIT FRAMING

A. Exterior Soffit Frame: Manufacturer's standard C-shaped steel sections, of web depths indicated, with stiffened flanges, and as follows:
   1. Minimum Base-Steel Thickness: 0.0538 inch 0.0966 inch.
   2. Flange Width: 2 inches , minimum.

2.10 FRAMING ACCESSORIES

A. Fabricate steel-framing accessories from steel sheet, ASTM A 1003/A 1003M, Structural Grade, Type H, metallic coated, of same grade and coating weight used for framing members.

B. Provide accessories of manufacturer's standard thickness and configuration, unless otherwise indicated, as follows:
   1. Supplementary framing.
   2. Bracing, bridging, and solid blocking.
      a. Product: ClarkDietrich Building Systems; Spazzer 5400 Bridging Bar (SPZS), Spazzer Bar Guard (SPBG), or comparable products
   3. Web stiffeners.
      a. Product: ClarkDietrich Building Systems; QTWS, or comparable product
   4. Anchor clips.
      a. Product: ClarkDietrich Building Systems; Moment Clip (MC Series), Holdown (CD Series)], or comparable products
   5. End clips.
   6. Foundation clips.
   7. Gusset plates.
   8. Stud kickers and knee braces.
   9. Joist hangers and end closures.
   10. Hole reinforcing plates.
   11. Backer plates.

2.11 ANCHORS, CLIPS, AND FASTENERS

A. Steel Shapes and Clips: ASTM A 36/A 36M, zinc coated by hot-dip process according to ASTM A 123/A 123M.

B. Anchor Bolts: ASTM F 1554, Grade 36, threaded carbon-steel hex-headed bolts and carbon-steel nuts; and flat, hardened-steel washers; zinc coated by mechanically deposition according to ASTM B 695, Class 50.

C. Expansion Anchors: Fabricated from corrosion-resistant materials, with allowable load or strength design capacities calculated according to ICC-ES AC193 and ACI 318 greater than or equal to the design load, as determined by testing per ASTM E 488 conducted by a qualified testing agency.

D. Power-Actuated Anchors: Fastener system of type suitable for application indicated, fabricated from corrosion-resistant materials, with allowable load capacities calculated according to ICC-ES AC70, greater than or equal to the design load, as determined by testing per ASTM E 1190 conducted by a qualified testing agency.

E. Mechanical Fasteners: ASTM C 1513, corrosion-resistant-coated, self-drilling, self-tapping, steel drill screws.
   1. Head Type: Low-profile head beneath sheathing, manufacturer's standard elsewhere.

F. Welding Electrodes: Comply with AWS standards.

2.12 MISCELLANEOUS MATERIALS

A. Galvanizing Repair Paint: SSPC-Paint 20 or MIL-P-21035B.

B. Shims: Load bearing, high-density multimonomer plastic, and nonleaching; or of cold-formed steel of same grade and coating as framing members supported by shims.

C. Sealer Gaskets: Closed-cell neoprene foam, 1/4 inch thick, selected from manufacturer's standard widths to match width of bottom track or rim track members.

2.13 FABRICATION

A. Fabricate cold-formed steel framing and accessories plumb, square, and true to line, and with connections securely fastened, according to referenced AISI's specifications and standards, manufacturer's written instructions, and requirements in this Section.
   1. Fabricate framing assemblies using jigs or templates.
   2. Cut framing members by sawing or shearing; do not torch cut.
   3. Fasten cold-formed steel framing members by welding, screw fastening, clinch fastening, pneumatic pin fastening, or riveting as standard with fabricator. Wire tying of framing members is not permitted.
      a. Comply with AWS D1.3/D1.3M requirements and procedures for welding, appearance and quality of welds, and methods used in correcting welding work.
      b. Locate mechanical fasteners and install according to Shop Drawings, with screw penetrating joined members by no fewer than three exposed screw threads.
   4. Fasten other materials to cold-formed steel framing by welding, bolting, pneumatic pin fastening, or screw fastening, according to Shop Drawings.

B. Reinforce, stiffen, and brace framing assemblies to withstand handling, delivery, and erection stresses. Lift fabricated assemblies to prevent damage or permanent distortion.

C. Fabrication Tolerances: Fabricate assemblies level, plumb, and true to line to a maximum allowable tolerance variation of 1/8 inch in 10 feet and as follows:
   1. Spacing: Space individual framing members no more than plus or minus 1/8 inch from plan location. Cumulative error shall not exceed minimum fastening requirements of sheathing or other finishing materials.
   2. Squareness: Fabricate each cold-formed steel framing assembly to a maximum out-of-square tolerance of 1/8 inch.

PART 3 - EXECUTION

3.1 EXAMINATION

A. Examine supporting substrates and abutting structural framing for compliance with requirements for installation tolerances and other conditions affecting performance of the Work.

B. Proceed with installation only after unsatisfactory conditions have been corrected.

3.2 PREPARATION

A. Before sprayed fire-resistive materials are applied, attach continuous angles, supplementary framing, or tracks to structural members indicated to receive sprayed fire-resistive materials.

B. After applying sprayed fire-resistive materials, remove only as much of these materials as needed to complete installation of cold-formed framing without reducing thickness of fire-resistive materials below that are required to obtain fire-resistance rating indicated. Protect remaining fire-resistive materials from damage.

C. Install load bearing shims or grout between the underside of load-bearing wall bottom track and the top of foundation wall or slab at locations with a gap larger than 1/4 inch to ensure a uniform bearing surface on supporting concrete or masonry construction.

D. Install sealer gaskets at the underside of wall bottom track or rim track and at the top of foundation wall or slab at stud or joist locations.

3.3 INSTALLATION, GENERAL

A. Cold-formed steel framing may be shop or field fabricated for installation, or it may be field assembled.

B. Install cold-formed steel framing according to ASTM C 1007 and AISI S240 “North American Standard for Cold-Formed Steel Structural Framing,” and to manufacturer's written instructions unless more stringent requirements are indicated.

C. Install shop- or field-fabricated, cold-formed framing and securely anchor to supporting structure.

1. Screw, bolt, or weld wall panels at horizontal and vertical junctures to produce flush, even, true-to-line joints with maximum variation in plane and true position between fabricated panels not exceeding 1/16 inch.

D. Install cold-formed steel framing and accessories plumb, square, and true to line, and with connections securely fastened.
   1. Cut framing members by sawing or shearing; do not torch cut.
   2. Fasten cold-formed steel framing members by welding, screw fastening, clinch fastening, or riveting. Wire tying of framing members is not permitted.
      a. Comply with AWS D1.3/D1.3M requirements and procedures for welding, appearance and quality of welds, and methods used in correcting welding work.
      b. Locate mechanical fasteners and install according to Shop Drawings, and complying with requirements for spacing, edge distances, and screw penetration.

E. Install framing members in one-piece lengths unless splice connections are indicated for track or tension members.

F. Install temporary bracing and supports to secure framing and support loads comparable in intensity to those for which structure was designed. Maintain braces and supports in place, undisturbed, until entire integrated supporting structure has been completed and permanent connections to framing are secured.

G. Do not bridge building expansion joints with cold-formed steel framing. Independently frame both sides of joints.

H. Install insulation, specified in Section 072100 "Thermal Insulation," in built-up exterior framing members, such as headers, sills, boxed joists, and multiple studs at openings, that are inaccessible on completion of framing work.

I. Fasten hole reinforcing plate over web penetrations that exceed size of manufacturer's approved or standard punched openings.

J. Erection Tolerances: Install cold-formed steel framing level, plumb, and true to line to a maximum allowable tolerance variation of 1/8 inch in 10 feet and as follows:
   1. Space individual framing members no more than plus or minus 1/8 inch from plan location. Cumulative error shall not exceed minimum fastening requirements of sheathing or other finishing materials.

3.4 LOAD-BEARING WALL INSTALLATION

A. Install continuous top and bottom tracks sized to match studs. Align tracks accurately and securely anchor at corners and ends, and at spacings as follows:
   1. Anchor Spacing: As shown on Shop Drawings.

B. Squarely seat studs against top and bottom tracks with gap not exceeding of 1/8 inch between the end of wall framing member and the web of track. Fasten both flanges of studs to top and bottom tracks. Space studs as follows:
   1. Stud Spacing: As required by design, but not less than 18 inches.

C. Set studs plumb, except as needed for diagonal bracing or required for nonplumb walls or warped surfaces and similar configurations.

D. Align studs vertically where floor framing interrupts wall-framing continuity. Where studs cannot be aligned, continuously reinforce track to transfer loads.

E. Align floor and roof framing over studs according to AISI S200, Section C1. Where framing cannot be aligned, continuously reinforce track to transfer loads.

F. Anchor studs abutting structural columns or walls, including masonry walls, to supporting structure as indicated.

G. Install headers over wall openings wider than stud spacing. Locate headers above openings as indicated. Fabricate headers of compound shapes indicated or required to transfer load to supporting studs, complete with clip-angle connectors, web stiffeners, or gusset plates.
   1. Frame wall openings with not less than a double stud at each jamb of frame as indicated on Shop Drawings. Fasten jamb members together to uniformly distribute loads.
   2. Install runner tracks and jack studs above and below wall openings. Anchor tracks to jamb studs with clip angles or by welding, and space jack studs same as full-height wall studs.

H. Install supplementary framing, blocking, and bracing in stud framing indicated to support fixtures, equipment, services, casework, heavy trim, furnishings, and similar work requiring attachment to framing.
   1. If type of supplementary support is not indicated, comply with stud manufacturer's written recommendations and industry standards in each case, considering weight or load resulting from item supported.

I. Install horizontal bridging in stud system, spaced vertically as indicated on Shop Drawings. Fasten at each stud intersection.

1. Bridging: Cold-rolled steel channel, welded or mechanically fastened to webs of punched studs with a minimum of two screws into each flange of the clip angle for framing members up to 6 inches deep.

J. Install steel sheet diagonal bracing straps to both stud flanges, terminate at and fasten to reinforced top and bottom tracks. Fasten clip-angle connectors to multiple studs at ends of bracing and anchor to structure.

K. Install miscellaneous framing and connections, including supplementary framing, web stiffeners, clip angles, continuous angles, anchors, and fasteners, to provide a complete and stable wall-framing system.

3.5 EXTERIOR NON-LOAD-BEARING WALL INSTALLATION

A. Install continuous tracks sized to match studs. Align tracks accurately and securely anchor to supporting structure as indicated.

B. Fasten both flanges of studs to bottom track unless otherwise indicated. Space studs as follows:
1. Stud Spacing: As required by design, but not less than 18 inches.

C. Set studs plumb, except as needed for diagonal bracing or required for nonplumb walls or warped surfaces and similar requirements.

D. Isolate non-load-bearing steel framing from building structure to prevent transfer of vertical loads while providing lateral support.
1. Install single deep-leg deflection tracks and anchor to building structure.
2. Connect vertical deflection clips to studs and anchor to building structure.

E. Install horizontal bridging in wall studs, spaced vertically in rows indicated on Shop Drawings but not more than 48 inches apart. Fasten at each stud intersection.
1. Top Bridging for Single Deflection Track: Install row of horizontal bridging within 18 inches of single deflection track. Install a combination of bridging and stud or stud-track solid blocking of width and thickness matching studs, secured to stud webs or flanges.
2. Bridging: Cold-rolled steel channel, welded or mechanically fastened to webs of punched studs.
3. Bridging: Combination of flat, taut, steel sheet straps of width and thickness indicated and stud-track solid blocking of width and thickness to match studs. Fasten flat straps to stud flanges and secure solid blocking to stud webs or flanges.

F. Install miscellaneous framing and connections, including stud kickers, web stiffeners, clip angles, continuous angles, anchors, and fasteners, to provide a complete and stable wall-framing system.

3.6 JOIST INSTALLATION

A. Install perimeter joist track sized to match joists. Align and securely anchor or fasten track to supporting structure at corners, ends, and spacings indicated on Shop Drawings.

B. Install joists bearing on supporting frame, level, straight, and plumb; adjust to final position, brace, and reinforce. Fasten joists to both flanges of joist track.
1. Install joists over supporting frame with a minimum end bearing of 1-1/2 inches.
2. Reinforce ends and bearing points of joists with web stiffeners, end clips, joist hangers, steel clip angles, or steel-stud sections as indicated on Shop Drawings.

C. Space joists not more than 2 inches from abutting walls, and as follows:
1. Joist Spacing: As indicated.

D. Frame openings with built-up joist headers consisting of joist and joist track, or another combination of connected joists if indicated.

E. Install joist reinforcement at interior supports with single, short length of joist section located directly over interior support, with lapped joists of equal length to joist reinforcement, or as indicated on Shop Drawings.
1. Install web stiffeners to transfer axial loads of walls above.

F. Install bridging at intervals indicated on Shop Drawings. Fasten bridging at each joist intersection as follows:
1. Bridging: Joist-track solid blocking of width and thickness indicated, secured to joist webs.
2. Bridging: Combination of flat, taut, steel sheet straps of width and thickness indicated and joist-track solid blocking of width and thickness indicated. Fasten flat straps to bottom flange of joists and secure solid blocking to joist webs.

G. Secure joists to load-bearing interior walls to prevent lateral movement of bottom flange.

H. Install miscellaneous joist framing and connections, including web stiffeners, closure pieces, clip angles, continuous angles, hold-down angles, anchors, and fasteners, to provide a complete and stable joist-framing assembly.

3.7 FIELD QUALITY CONTROL

A. Testing: Owner will engage a qualified independent testing and inspecting agency to perform field tests and inspections and prepare test reports.

B. Field and shop welds will be subject to testing and inspecting.

C. Testing agency will report test results promptly and in writing to Contractor and Architect.
D. Remove and replace work where test results indicate that it does not comply with specified requirements.
E. Additional testing and inspecting, at Contractor's expense, will be performed to determine compliance of replaced or additional work with specified requirements.

3.8 REPAIRS AND PROTECTION

A. Galvanizing Repairs: Prepare and repair damaged galvanized coatings on fabricated and installed cold-formed steel framing with galvanized repair paint according to ASTM A 780 and manufacturer's written instructions.
B. Provide final protection and maintain conditions, in a manner acceptable to manufacturer and Installer, that ensure that cold-formed steel framing is without damage or deterioration at time of Substantial Completion.

END OF SECTION 054000

SECTION 055113 - METAL PAN STAIRS

PART 1 - GENERAL

1.1 RELATED DOCUMENTS

A. Drawings and general provisions of the Contract, including General and Supplementary Conditions and Division 01 Specification Sections, apply to this Section.

1.2 SUMMARY

A. Section Includes:
   1. Preassembled steel stairs with concrete-filled treads.

1.3 COORDINATION

A. Coordinate selection of shop primers with topcoats to be applied over them. Comply with paint and coating manufacturers' written recommendations to ensure that shop primers and topcoats are compatible with one another.

B. Coordinate installation of anchorages for metal stairs. Furnish setting drawings, templates, and directions for installing anchorages, including sleeves, concrete inserts, anchor bolts, and items with integral anchors, that are to be embedded in concrete or masonry. Deliver such items to Project site in time for installation.

C. Coordinate locations of hanger rods and struts with other work so that they do not encroach on required stair width and are within the fire-resistance-rated stair enclosure.

1.4 ACTION SUBMITTALS

A. Product Data: For metal pan stairs and the following:
   1. Paint products.

B. Sustainable Documentation Submittals:
   1. Recycled Content:
      a. Product data and certification letter indicating percentages by weight of post-consumer and pre-consumer recycled content for products having recycled content.
      b. Include statement indicating costs for each product having recycled content.
   2. Regional Material:
      a. Product data for regional materials (within 500 miles of construction site) indicating location and distance from Project of material manufacturer and point of extraction, harvest, or recovery for each raw material.
      b. Include statement indicating cost for each regional material and the fraction by weight that is considered regional.
      c. For metal products, provide statement from manufacturer indicating location for scrap collection and other recycled materials include in the product and its distance from the project site.

C. Shop Drawings: Include plans, elevations, sections, details, and attachments to other work.

D. Delegated Design: Provide calculations demonstrating that members and fasteners will meet code required loading in the municipality where the project is located.

1.5 QUALITY ASSURANCE

A. Welding Qualifications: Qualify procedures and personnel according to the following:
   1. AWS D1.1/D1.1M, "Structural Welding Code - Steel."
   2. AWS D1.3/D1.3M, "Structural Welding Code - Sheet Steel."

PART 2 - PRODUCTS

2.1 PERFORMANCE REQUIREMENTS

A. Delegated Design: Engage a qualified professional engineer, as defined in Section 014000 "Quality Requirements," to design stairs.

B. Structural Performance of Stairs: Metal stairs shall withstand the effects of gravity loads and the following loads and stresses within limits and under conditions indicated:
   1. Uniform Load: 100 lbs. / sq. ft..

2. Concentrated Load: 300 lbf applied on an area of 4 sq. in..
3. Uniform and concentrated loads need not be assumed to act concurrently.
4. Stair Framing: Capable of withstanding stresses resulting from railing loads in addition to loads specified above.
5. Limit deflection of treads, platforms, and framing members to L/360 or 1/4 inch, whichever is less.

2.2 METALS

A. Metal Surfaces, General: Provide materials with smooth, flat surfaces unless otherwise indicated. For components exposed to view in the completed Work, provide materials without seam marks, roller marks, rolled trade names, or blemishes.

B. Recycled Content of Steel Products: Postconsumer recycled content plus one-half of pre-consumer recycled content not less than 30 percent.

C. Uncoated, Cold-Rolled Steel Sheet: ASTM A 1008/A 1008M, either commercial steel, Type B, or structural steel, Grade 25, unless another grade is required by design loads; exposed.

2.3 FASTENERS

A. General: Provide zinc-plated fasteners with coating complying with ASTM B 633 or ASTM F 1941, Class Fe/Zn 12 for exterior use, and Class Fe/Zn 5 where built into exterior walls. Select fasteners for type, grade, and class required.

B. Bolts and Nuts: Regular hexagon-head bolts, ASTM A 307, Grade A; with hex nuts, ASTM A 563; and, where indicated, flat washers.

C. Anchor Bolts: ASTM F 1554, Grade 36, of dimensions indicated; with nuts, ASTM A 563; and, where indicated, flat washers.
1. Provide mechanically deposited or hot-dip, zinc-coated anchor bolts for exterior stairs.

D. Post-Installed Anchors: capable of sustaining, without failure, a load equal to six times the load imposed when installed in unit masonry and four times the load imposed when installed in concrete, as determined by testing according to ASTM E 488/E 488M, conducted by a qualified independent testing agency.
1. Material for Interior Locations: Carbon-steel components zinc plated to comply with ASTM B 633 or ASTM F 1941, Class Fe/Zn 5, unless otherwise indicated.
2. Material for Exterior Locations and Where Stainless Steel Is Indicated: Alloy Group 1 stainless-steel bolts, ASTM F 593, and nuts, ASTM F 594.

2.4 MISCELLANEOUS MATERIALS

A. Universal Shop Primer: Fast-curing, lead- and chromate-free, universal modified-alkyd primer complying with MPI#79 and compatible with topcoat.
1. Use primer containing pigments that make it easily distinguishable from zinc-rich primer.

B. Shop Primer for Galvanized Steel: Primer formulated for exterior use over zinc-coated metal and compatible with finish paint systems indicated.

C. Galvanizing Repair Paint: High-zinc-dust-content paint complying with SSPC-Paint 20 and compatible with paints specified to be used over it.

2.5 FABRICATION, GENERAL

A. Provide complete stair assemblies, including metal framing, hangers, struts, clips, brackets, bearing plates, and other components necessary to support and anchor stairs and platforms on supporting structure.
1. Join components by welding unless otherwise indicated.
2. Use connections that maintain structural value of joined pieces.

B. Preassembled Stairs: Assemble stairs in shop to greatest extent possible. Disassemble units only as necessary for shipping and handling limitations. Clearly mark units for reassembly and coordinated installation.

C. Cut, drill, and punch metals cleanly and accurately. Remove burrs and ease edges to a radius of approximately 1/32 inch unless otherwise indicated. Remove sharp or rough areas on exposed surfaces.

D. Form bent-metal corners to smallest radius possible without causing grain separation or otherwise impairing work.

E. Form exposed work with accurate angles and surfaces and straight edges.

F. Weld connections to comply with the following:
1. Use materials and methods that minimize distortion and develop strength and corrosion resistance of base metals.
2. Obtain fusion without undercut or overlap.
3. Remove welding flux immediately.
4. Weld exposed corners and seams continuously unless otherwise indicated.

5. At exposed connections, finish exposed welds to comply with NOMMA's "Voluntary Joint Finish Standards"
   a. Finish # 1 Welds: No evidence of a welded joint
   b. Finish # 2 Welds: Completely sanded joint, some undercutting and pinholes OK.
   c. Finish # 3 Welds: Partially dressed weld with spatter removed
   d. Finish # 4 Welds: Good quality, uniform undressed weld with minimal spatter.

G. Form exposed connections with hairline joints, flush and smooth, using concealed fasteners where possible. Where exposed fasteners are required, use Phillips flat-head (countersunk) screws or bolts unless otherwise indicated. Locate joints where least conspicuous.

2.6 STEEL-FRAMED STAIRS

A. NAAMM Stair Standard: Comply with "Recommended Voluntary Minimum Standards for Fixed Metal Stairs" in NAAMM AMP 510, "Metal Stairs Manual," Commercial Class, unless more stringent requirements are indicated.

B. Stair Framing:
   1. Fabricate stringers of steel channels.
      a. Provide closures for exposed ends of channel stringers.
   2. Construct platforms of steel channel headers and miscellaneous framing members as needed to comply with performance requirements.
   3. Weld or bolt stringers to headers; weld or bolt framing members to stringers and headers. If using bolts, fabricate and join so bolts are not exposed on finished surfaces.
   4. Where stairs are enclosed by gypsum board shaft-wall assemblies, provide hanger rods or struts to support landings from floor construction above or below. Locate hanger rods and struts where they do not encroach on required stair width and are within the fire-resistance-rated stair enclosure.
   5. Where masonry walls support metal stairs, provide temporary supporting struts designed for erecting steel stair components before installing masonry.

C. Metal Pan Stairs: Form risers, sub-tread pans, and sub-platforms to configurations shown from steel sheet of thickness needed to comply with performance requirements, but not less than 0.067 inch.
   1. Steel Sheet: Uncoated cold -rolled steel sheet unless otherwise indicated.
   2. Shape metal pans to include nosing integral with riser.
   3. At Contractor's option, provide stair assemblies with metal pan sub-treads filled with reinforced concrete during fabrication.
   4. Provide sub-platforms of configuration indicated or, if not indicated, the same as sub-treads. Weld sub-platforms to platform framing.
      a. Smooth Soffit Construction: Construct sub-platforms with flat metal under surfaces to produce smooth soffits.

2.7 STAIR RAILINGS

A. Comply with applicable requirements in Section 055213 "Pipe and Tube Railings."

2.8 FINISHES

A. Finish metal stairs after assembly.

B. Apply shop primer to uncoated surfaces of metal stair components, except those with galvanized finishes and those to be embedded in concrete or masonry unless otherwise indicated. Comply with SSPC-PA 1, "Paint Application Specification No. 1: Shop, Field, and Maintenance Painting of Steel," for shop painting.

PART 3 - EXECUTION

3.1 INSTALLING METAL PAN STAIRS

A. Fastening to In-Place Construction: Provide anchorage devices and fasteners where necessary for securing metal stairs to in-place construction. Include threaded fasteners for concrete and masonry inserts, through-bolts, lag bolts, and other connectors.

B. Cutting, Fitting, and Placement: Perform cutting, drilling, and fitting required for installing metal stairs. Set units accurately in location, alignment, and elevation, measured from established lines and levels and free of rack.

C. Install metal stairs by welding stair framing to steel structure or to weld plates cast into concrete unless otherwise indicated.

D. Provide temporary bracing or anchors in formwork for items that are to be built into concrete, masonry, or similar construction.

E. Fit exposed connections accurately together to form hairline joints. Weld connections that are not to be left as exposed joints but cannot be shop welded because of shipping size limitations. Do not weld, cut, or abrade surfaces of exterior units that have been hot-dip galvanized after fabrication and are for bolted or screwed field connections.
F. Field Welding: Comply with requirements for welding in "Fabrication, General" Article.
G. Place and finish concrete fill for treads and platforms to comply with Section 033000 "Cast-in-Place Concrete."

3.2 ADJUSTING AND CLEANING
A. Touchup Painting: Immediately after erection, clean field welds, bolted connections, and abraded areas of shop paint, and paint exposed areas with same material as used for shop painting to comply with SSPC-PA 1 for touching up shop-painted surfaces.
1. Apply by brush or spray to provide a minimum 2.0-mil dry film thickness.
B. Galvanized Surfaces: Clean field welds, bolted connections, and abraded areas and repair galvanizing to comply with ASTM A 780/A 780M.

END OF SECTION 055113

SECTION 061053 - MISCELLANEOUS ROUGH CARPENTRY

PART 1 - GENERAL

1.1 RELATED DOCUMENTS

A. Drawings and general provisions of the Contract, including General and Supplementary Conditions and Division 01 Specification Sections, apply to this Section.

1.2 SUMMARY

A. Section Includes:
   1. Exterior Architectural Woodwork
   2. Rooftop equipment bases and support curbs.
   3. Wood blocking, cants, and nailers.
   4. Utility shelving.
   5. Plywood backing panels.

1.3 DEFINITIONS

A. Dimension Lumber: Lumber of 2 inches nominal or greater but less than 5 inches nominal in least dimension.

B. Lumber grading agencies, and the abbreviations used to reference them, include the following:
   1. NeLMA: Northeastern Lumber Manufacturers' Association.
   2. NHLA: National Hardwood Lumber Association.
   3. NLGA: National Lumber Grades Authority.
   4. SPIB: The Southern Pine Inspection Bureau.
   5. WCLIB: West Coast Lumber Inspection Bureau.
   6. WWPA: Western Wood Products Association.

1.4 ACTION SUBMITTALS

A. Product Data: For each type of process and factory-fabricated product. Indicate component materials and dimensions and include construction and application details.
   1. Include data for wood-preservative treatment from chemical treatment manufacturer and certification by treating plant that treated materials comply with requirements. Indicate type of preservative used and net amount of preservative retained.
   2. Include data for fire-retardant treatment from chemical treatment manufacturer and certification by treating plant that treated materials comply with requirements. Include physical properties of treated materials based on testing by a qualified independent testing agency.
   3. For fire-retardant treatments, include physical properties of treated lumber both before and after exposure to elevated temperatures, based on testing by a qualified independent testing agency according to ASTM D 5664.
   4. For products receiving a waterborne treatment, include statement that moisture content of treated materials was reduced to levels specified before shipment to Project site.
   5. Include copies of warranties from chemical treatment manufacturers for each type of treatment.

1.5 INFORMATIONAL SUBMITTALS

A. Sustainable Documentation Submittals:
   1. Regional Material:
      a. Product data for regional materials (within 500 miles of construction site) indicating location and distance from Project of material manufacturer and point of extraction, harvest, or recovery for each raw material.
      b. Include statement indicating cost for each regional material and the fraction by weight that is considered regional.
      c. For metal products, provide statement from manufacturer indicating location for scrap collection and other recycled materials include in the product and its distance from the project site.
   2. Certified Wood:
      a. Product data and chain-of-custody certificates for products containing certified wood.
      b. Provide invoices for all permanently installed wood on the project, whether FSC-Certified or not. Invoices must indicate product name, product manufacturer, product cost, FSC status and Chain-of-Custody number for vendor.

3. VOC content data. Provide for any adhesives, sealants, paints, or coatings used on the interior of the building.
   a. Product information or statement from manufacturer indicating the VOC content of the product in grams per liter (g/L).
4. No Added Urea-Formaldehyde data. Provide for any permanently installed composite wood used on the interior of the building:
   a. Product information or statement from manufacturer indicating that the product has No Added Urea-Formaldehyde (NAUF).
   b. Product information or statement from manufacturer indicating that composite wood or agrifiber products or adhesives used to fabricate the product have No Added Urea-Formaldehyde (NAUF).

B. Evaluation Reports: For the following, from ICC-ES:
1. Preservative-treated wood.
2. Fire-retardant-treated wood.
3. Power-driven fasteners.
4. Powder-actuated fasteners.
5. Expansion anchors.
6. Metal framing anchors.

1.6 QUALITY ASSURANCE

A. Source Limitations for Fire-Retardant-Treated Wood: Obtain each type of fire-retardant-treated wood product through one source from a single producer.

B. Testing Agency Qualifications: For testing agency providing classification marking for fire-retardant treated material, an inspection agency acceptable to authorities having jurisdiction that periodically performs inspections to verify that the material bearing the classification marking is representative of the material tested.

1.7 DELIVERY, STORAGE, AND HANDLING

A. Stack lumber flat with spacers beneath and between each bundle to provide air circulation. Protect lumber from weather by covering with waterproof sheeting, securely anchored. Provide for air circulation around stacks and under coverings.

PART 2 - PRODUCTS

2.1 WOOD PRODUCTS, GENERAL

A. Certified Wood: Lumber and plywood shall be produced from wood obtained from forests certified by an FSC-accredited certification body to comply with FSC STD-01-001, "FSC Principles and Criteria for Forest Stewardship."

B. FM Global: For wood blocking or nailers at roof conditions, comply with the requirements of FM Global Bulletin 1-49 for fastening these elements to the building, including the methodology, gauges, thicknesses, and frequency of attachment.

C. Do not use material that is warped or that does not comply with requirements for untreated material.

D. Lumber: DOC PS 20 and applicable rules of grading agencies indicated. If no grading agency is indicated, provide lumber that complies with the applicable rules of any rules-writing agency certified by the ALSC Board of Review. Provide lumber graded by an agency certified by the ALSC Board of Review to inspect and grade lumber under the rules indicated.
1. Factory mark each piece of lumber with grade stamp of grading agency.
2. For exposed lumber indicated to receive a stained or natural finish, mark grade stamp on end or back of each piece.
3. Where nominal sizes are indicated, provide actual sizes required by DOC PS 20 for moisture content specified. Where actual sizes are indicated, they are minimum dressed sizes for dry lumber.
4. Provide dressed lumber, S4S, unless otherwise indicated.

E. Maximum Moisture Content of Lumber: 15 percent unless otherwise indicated.

F. VOC Limits: any adhesives, sealants, paints, or coatings shall meet the VOC limits indicated in Section 018113.

G. Required Certification: A minimum of 50% of wood, calculated by cost, shall be obtained from forests certified by an FSC accredited certification body to comply with FSC STD-01-001, "FSC Principles and Criteria for Forest Stewardship."

H. Required Certification: Composite wood products shall contain No Added Urea-Formaldehyde (NAUF) in the product or laminating adhesives used to fabricate the product.

2.2 WOOD-PRESERVATIVE-TREATED MATERIALS

A. Preservative Treatment by Pressure Process: AWPA U1; Use Category UC2.
   1. Preservative Chemicals: Acceptable to authorities having jurisdiction and containing no arsenic or chromium.
   2. For exposed items indicated to receive a stained or natural finish, use chemical formulations that do not require incising, contain colorants, bleed through, or otherwise adversely affect finishes.

B. Kiln-dry lumber after treatment to a maximum moisture content of 19 percent. Do not use material that is warped or does not comply with requirements for untreated material.

C. Mark lumber with treatment quality mark of an inspection agency approved by the ALSC Board of Review.
   1. For exposed lumber indicated to receive a stained or natural finish, mark end or back of each piece.

D. Application: Treat items indicated on Drawings, and the following:
   1. Wood cants, nailers, curbs, equipment support bases, blocking, stripping, and similar members in connection with roofing, flashing, vapor barriers, and waterproofing.
   2. Wood sills, sleepers, blocking, and similar concealed members in contact with masonry or concrete.
   3. Wood framing and furring attached directly to the interior of below-grade exterior masonry or concrete walls.
   4. Wood framing members that are less than 18 inches above the ground in crawl spaces or unexcavated areas.
   5. Wood floor plates that are installed over concrete slabs-on-grade.

2.3 FIRE-RETARDANT-TREATED MATERIALS

A. General: Where fire-retardant-treated materials are indicated, use materials complying with requirements in this article, that are acceptable to authorities having jurisdiction, and with fire-test-response characteristics specified as determined by testing identical products per test method indicated by a qualified testing agency.

B. Fire-Retardant-Treated Lumber and Plywood by Pressure Process: Products with a flame spread index of 25 or less when tested according to ASTM E 84, and with no evidence of significant progressive combustion when the test is extended an additional 20 minutes, and with the flame front not extending more than 10.5 feet beyond the centerline of the burners at any time during the test.
   1. Use treatment that does not promote corrosion of metal fasteners.
   2. Exterior Type: Treated materials shall comply with requirements specified above for fire-retardant-treated lumber and plywood by pressure process after being subjected to accelerated weathering according to ASTM D 2898. Use for exterior locations and where indicated.
   3. Interior Type A: Treated materials shall have a moisture content of 28 percent or less when tested according to ASTM D 3201 at 92 percent relative humidity. Use where exterior type is not indicated.
   4. Design Value Adjustment Factors: Treated lumber shall be tested according ASTM D 5664, and design value adjustment factors shall be calculated according to ASTM D 6841]

C. Kiln-dry lumber after treatment to a maximum moisture content of 19 percent. Kiln-dry plywood after treatment to a maximum moisture content of 15 percent.

D. Identify fire-retardant-treated wood with appropriate classification marking of testing and inspecting agency acceptable to authorities having jurisdiction.

E. For exposed items indicated to receive a stained or natural finish, use chemical formulations that do not bleed through, contain colorants, or otherwise adversely affect finishes.

F. Application: Treat all miscellaneous carpentry unless otherwise indicated.
   1. Concealed blocking.
   2. Roof framing and blocking.
   3. Wood cants, nailers, curbs, equipment support bases, blocking, and similar members in connection with roofing.
   4. Plywood backing panels.

2.4 MISCELLANEOUS LUMBER

A. General: Provide miscellaneous lumber indicated and lumber for support or attachment of other construction, including the following:
   1. Blocking.
   2. Nailers.
   3. Rooftop equipment bases and support curbs.

4. Cants.

B. For items subject to wind uplift forces provide demonstration that fastening patterns meet FM 1-49 and ANSI / SPRI ES-1 requirements.

C. For items of dimension lumber size, provide Construction or No. 2 grade lumber of any species.
1. Mixed southern pine; SPIB.

D. For concealed boards, provide lumber with 15 percent maximum moisture content and any of the following species and grades:
1. Spruce-pine-fir (south) or spruce-pine-fir, Construction or No. 2 Common grade; NeLMA, NLGA, WCLIB, or WWPA.

E. For blocking not used for attachment of other construction, Utility, Stud, or No. 3 grade lumber of any species may be used provided that it is cut and selected to eliminate defects that will interfere with its attachment and purpose.

F. For blocking and nailers used for attachment of other construction, select and cut lumber to eliminate knots and other defects that will interfere with attachment of other work.

2.5 PLYWOOD BACKING PANELS

A. Equipment Backing Panels: DOC PS 1, Exterior, AC , fire-retardant treated, in thickness indicated or, if not indicated, not less than 1/2-inch nominal thickness.

2.6 FASTENERS

A. General: Provide fasteners of size and type indicated that comply with requirements specified in this article for material and manufacture.
1. Where carpentry is exposed to weather, in ground contact, pressure-preservative treated, or in area of high relative humidity, provide fasteners of Type 304 stainless steel.
2. Where carpentry is provided for use in a roofing application, fasteners shall be of Type 304 stainless steel.

B. Nails, Brads, and Staples: ASTM F 1667.

C. Power-Driven Fasteners: NES NER-272.

D. Wood Screws: ASME B18.6.1.

E. Screws for Fastening to Metal Framing: ASTM C 1002, length as recommended by screw manufacturer for material being fastened.

F. Lag Bolts: ASME B18.2.1.

G. Bolts: Steel bolts complying with ASTM A 307, Grade A; with ASTM A 563 hex nuts and, where indicated, flat washers.

H. Expansion Anchors: Anchor bolt and sleeve assembly of material indicated below with capability to sustain, without failure, a load equal to 6 times the load imposed when installed in unit masonry assemblies and equal to 4 times the load imposed when installed in concrete as determined by testing per ASTM E 488 conducted by a qualified independent testing and inspecting agency.
1. Material: Carbon-steel components, zinc plated to comply with ASTM B 633, Class Fe/Zn 5.

PART 3 - EXECUTION

3.1 INSTALLATION, GENERAL

A. Use fasteners of appropriate type and length. Predrill members when necessary to avoid splitting wood. Indicate that bolts and nuts are to be recessed flush with surface, unless otherwise indicated.

B. Sheathing boards are to be installed flush and plumb with the joints between the boards not to exceed 1/8-inch. Wherever possible, the finished edge is to face the perimeter of rough openings (exposed gypsum is not a suitable substrate for the air barrier's self-adhered membrane).

C. Set carpentry to required levels and lines, with members plumb, true to line, cut, and fitted. Fit carpentry to other construction; scribe and cope as needed for accurate fit. Locate nailers, blocking, and similar supports to comply with requirements for attaching other construction.

D. Where wood-preservative-treated lumber is installed adjacent to metal decking, install continuous flexible flashing separator between wood and metal decking.

E. Framing Standard: Comply with AF&PA's WCD 1, "Details for Conventional Wood Frame Construction," unless otherwise indicated.

F. Install plywood backing panels by fastening to studs; coordinate locations with utilities requiring backing panels. Install fire-retardant treated plywood backing panels with classification marking of testing agency exposed to view.

G. Do not splice structural members between supports unless otherwise indicated.

H. Provide blocking and framing as indicated and as required to support facing materials, fixtures, specialty items, and trim.
   1. Provide metal clips for fastening gypsum board or lath at corners and intersections where framing or blocking does not provide a surface for fastening edges of panels. Space clips not more than 16 inches o.c.

I. Provide fire blocking in furred spaces, stud spaces, and other concealed cavities as indicated and as follows:
   1. Fire block furred spaces of walls, at each floor level, at ceiling, and at not more than 96 inches o.c. with solid wood blocking or noncombustible materials accurately fitted to close furred spaces.
   2. Fire block concealed spaces of wood-framed walls and partitions at each floor level, at ceiling line of top story, and at not more than 96 inches o.c. Where fire blocking is not inherent in framing system used, provide closely fitted solid wood blocks of same width as framing members and 2-inch nominal thickness.
   3. Fire block concealed spaces between floor sleepers with same material as sleepers to limit concealed spaces to not more than 100 sq. ft. and to solidly fill space below partitions.
   4. Fire block concealed spaces behind combustible cornices and exterior trim at not more than 20 feet o.c.

J. Sort and select lumber so that natural characteristics will not interfere with installation or with fastening other materials to lumber. Do not use materials with defects that interfere with function of member or pieces that are too small to use with minimum number of joints or optimum joint arrangement.

K. Comply with AWPA M4 for applying field treatment to cut surfaces of preservative-treated lumber.
   1. Use inorganic boron for items that are continuously protected from liquid water.
   2. Use copper naphthenate for items not continuously protected from liquid water.

L. Securely attach carpentry work to substrate by anchoring and fastening as indicated, complying with the following:
   1. NES NER-272 for power-driven fasteners.
   2. Table 2304.9.1, "Fastening Schedule," in ICC's International Building Code.
   3. Table R602.3(1), "Fastener Schedule for Structural Members," and Table R602.3(2), "Alternate Attachments," in ICC's International Residential Code for One- and Two-Family Dwellings.

M. Use steel common nails unless otherwise indicated. Select fasteners of size that will not fully penetrate members where opposite side will be exposed to view or will receive finish materials. Make tight connections between members. Install fasteners without splitting wood. Drive nails snug but do not countersink nail heads unless otherwise indicated.

3.2 WOOD BLOCKING, AND NAILER INSTALLATION

A. Install where indicated and where required for attaching other work. Form to shapes indicated and cut as required for true line and level of attached work. Coordinate locations with other work involved.

B. Attach items to substrates to support applied loading. Recess bolts and nuts flush with surfaces unless otherwise indicated.

C. Where roof related wood blocking is provided joints in successive layers shall be staggered no less than 6” from one another.

3.3 PROTECTION

A. Protect wood that has been treated with inorganic boron (SBX) from weather. If, despite protection, inorganic boron-treated wood becomes wet, apply EPA-registered borate treatment. Apply borate solution by spraying to comply with EPA-registered label.

B. Protect miscellaneous rough carpentry from weather. If, despite protection, miscellaneous rough carpentry becomes wet, apply EPA-registered borate treatment. Apply borate solution by spraying to comply with EPA-registered label.

END OF SECTION 061053

SECTION 064013 – EXTERIOR ARCHITECTURAL WOODWORK

PART 1 - GENERAL

1.1 RELATED DOCUMENTS

A. Drawings and general provisions of the Contract, including General and Supplementary Conditions and Division 01 Specification Sections, apply to this Section.

1.2 SUMMARY

A. Section Includes:

1. Exterior standing and running trim.
2. Exterior frames and jambs.
3. Exterior shutters.
4. Wood furring, blocking, shims, and hanging strips for installing exterior architectural woodwork items that are not concealed within other construction.
5. Shop priming of exterior architectural woodwork.
6. Shop finishing of exterior architectural woodwork.

B. Related Requirements:

1. Section 061053 – Miscellaneous Rough Carpentry for wood furring, blocking, shims, and hanging strips required for installing exterior architectural woodwork that are concealed within other construction before exterior architectural woodwork installation.

1.3 COORDINATION

A. Coordinate sizes and locations of framing, blocking, furring, reinforcements, and other related units of Work specified in other Sections, to ensure that exterior architectural woodwork can be supported and installed as indicated.

1.4 PREINSTALLATION MEETINGS

A. Preinstallation Conference: Conduct conference at project site, 630 Charlie Roberts Lane, Kendleton, Texas 77451.

1.5 ACTION SUBMITTALS

A. Product Data: For each type of product.

1. Wood-Preservative Treatment:

a. Include data and warranty information from chemical-treatment manufacturer and certification by treating plant that treated materials comply with requirements.
b. Indicate type of preservative used and net amount of preservative retained.
c. Include chemical-treatment manufacturer's written instructions for finishing treated material and manufacturer's written warranty.

B. Shop Drawings:

1. Include dimensioned plans, elevations, sections, and attachment details.
2. Show locations and sizes of furring, blocking, and hanging strips, including blocking and reinforcement concealed by construction and specified in other Sections.

C. Samples: For each exposed product and for each color and finish specified.

1. Size:

a. Panel Products: 12 inches by 12 inches (300 mm by 300 mm).
b. Lumber Products: Not less than [**5 inches (125 mm) wide by 12 inches (300 mm) long**] [**5 inches (125 mm) wide by 24 inches (600 mm) long**], for each species and cut, finished on one side and one edge.

D. Samples for Verification: For the following:

1. Lumber for Exterior Wood-Stain Finish: Not less than 5 inches (125 mm) wide by 12 inches (300 mm) long, for each species, with one-half of exposed surface finished.
2. Lumber for Transparent Finish: Not less than [**5 inches (125 mm) wide by 12 inches (300 mm) long**] [**5 inches (125 mm) wide by 24 inches (600 mm) long**], for each species and cut, finished on one side and one edge.
3. Lumber and Panel Products with Shop-Applied Opaque Finish: 5 inches (125 mm) wide by 12 inches (300 mm) long for lumber and [**8 by 10 inches (200 by 250 mm)**] [**12 by 12 inches (300 by 300 mm)**] for panels, for each finish system and color.

1.6 INFORMATIONAL SUBMITTALS

A. Qualification Data: For Architectural Woodwork Manufacturer.

B. Evaluation Reports: For preservative-treated and fire-retardant-treated wood materials, from ICC-ES.

1.7 CLOSEOUT SUBMITTALS

A. WI Certified Compliance Program certificates.

1.8 QUALITY ASSURANCE

A. Manufacturer's Qualifications: Employs skilled workers who custom fabricate products similar to those required for this Project and whose products have a record of successful in-service performance.

1. Manufacturer's Certification: Licensed participant in AWI's Quality Certification Program or WI's Certified Compliance Program.

B. Mockups: Build mockups to verify selections made under Sample submittals, to demonstrate aesthetic effects, and to set quality standards for materials and execution.

1. Build mockups of typical exterior architectural woodwork as shown on Drawings, Wood Ceiling and Soffits.
2. Approval of mockups does not constitute approval of deviations from the Contract Documents contained in mockups unless Owner specifically approves such deviations by Change Order.
3. Subject to compliance with requirements, approved mockups may become part of the completed Work if undisturbed at time of Substantial Completion.

1.9 DELIVERY, STORAGE, AND HANDLING

A. Comply with Architectural Woodwork Standards, Section 2.

B. Store woodwork in installation areas or in areas where environmental conditions comply with requirements specified in "Field Conditions" Article.

1. Handle and store fire-retardant-treated wood to comply with chemical-treatment manufacturer's written instructions.

1.10 FIELD CONDITIONS

A. Weather Limitations: Proceed with installation of exterior architectural woodwork only when existing and forecasted weather conditions permit work to be performed and at least one coat of specified finish to be applied without exposure to rain, snow, or dampness.

B. Field Measurements: Where exterior architectural woodwork is indicated to fit to other construction, verify dimensions of other construction by field measurements before fabrication, and indicate measurements on Shop Drawings.

1. Locate concealed framing, blocking, and reinforcements that support woodwork by field measurements before being concealed by construction, and indicate measurements on Shop Drawings.

C. Established Dimensions: Where exterior architectural woodwork is indicated to fit to other construction, establish dimensions for areas where woodwork is to fit. Provide allowance for trimming at site, and coordinate construction to ensure that actual dimensions correspond to established dimensions.

PART 2 - PRODUCTS

2.1 ARCHITECTURAL WOODWORK MANUFACTURERS

A. Manufacturers: Subject to compliance with requirements, provide products as indicated on the Drawings and/or as appoved by Architect.

2.2 ARCHITECTURAL WOODWORK, GENERAL

A. Quality Standard: Unless otherwise indicated, comply with the Architectural Woodwork Standards for grades of exterior architectural woodwork indicated for construction, finishes, installation, and other requirements.

1. The Contract Documents contain requirements that are more stringent than the Architectural Woodwork Standards. Comply with Contract Documents and the Architectural Woodwork Standards.

2.3 EXTERIOR STANDING AND RUNNING TRIM FOR TRANSPARENT FINISH

A. Architectural Woodwork Standards Grade: Premium.

B. Backout or groove backs of flat trim members and kerf backs of other wide, flat members, except for members with ends exposed in finished work.

C. Wood Species: As indicated on Drawings and/or as approved by Architect.

1. Do not use plain-sawn softwood lumber with exposed, flat surfaces more than 3 inches (76 mm) wide.
2. Wood Moisture Content: 9 to 15 percent.

2.4 EXTERIOR STANDING AND RUNNING TRIM FOR OPAQUE FINISH

A. Architectural Woodwork Standards Grade: As approved by Architect.

B. Backout or groove backs of flat trim members, and kerf backs of other wide, flat members, except for members with ends exposed in finished work.

C. Wood Species: Eastern white pine and/or as approved by Architect.

1. Do not use plain-sawn softwood lumber with exposed, flat surfaces more than 3 inches (76 mm) wide.
2. Wood Moisture Content: 9 to 15 percent.

2.5 EXTERIOR STAIRS AND RAILINGS

A. Architectural Woodwork Standards Grade: As approved by Architect.

B. Hand select wood for freedom from characteristics, on exposed surfaces and edges, that would impair finish appearance, including decay, honeycomb, knot holes, shake, splits, torn grain, and wane.

2.6 WOOD MATERIALS

A. Hardboard: ANSI A135.4.

B. Softwood Plywood: DOC PS 1,exterior**,** medium-density overlay.

2.7 PRESERVATIVE-TREATED-WOOD MATERIALS

A. Preservative-Treated-Wood Materials: Provide with water-repellent preservative treatment complying with AWPA N1 (dip, spray, flood, or vacuum-pressure treatment).

1. Preservative Chemicals: 3-iodo-2-propynyl butyl carbamate (IPBC)**,** combined with a compatible EPA-registered insecticide.
2. Use chemical formulations that do not bleed through or otherwise adversely affect finishes. Do not use colorants in solution to distinguish treated material from untreated material.

B. Extent of Preservative-Treated Wood Materials: Treat wood materials unless otherwise indicated on Drawings or except items indicated to be fire-retardant treated.

1. Items fabricated from the following wood species need not be treated:

a. White oak.
b. African mahogany.
c. Honduras mahogany.
d. Ipe.
e. Dark red meranti.
f. Teak.

2.8 FIRE-RETARDANT-TREATED WOOD MATERIALS

A. Fire-Retardant-Treated Wood Materials, General: Where fire-retardant-treated materials are indicated, use materials complying with requirements that are acceptable to authorities having jurisdiction and with fire-test-response characteristics specified as determined by testing identical products according to test method indicated by a qualified testing agency.

1. Use treated materials that comply with requirements of the Architectural Woodwork Standards for the grade specified. Do not use materials that are warped, discolored, or otherwise defective.
2. Use fire-retardant-treatment formulations that do not bleed through or otherwise adversely affect finishes. Do not use colorants to distinguish treated materials from untreated materials.

3. Identify fire-retardant-treated materials with appropriate classification marking of qualified testing agency in the form of removable paper label or imprint on surfaces that will be concealed from view after installation.

B. Exterior Fire-Retardant-Treated Lumber and Plywood: Products with a flame-spread index of 25 or less when tested according to ASTM E84 after being subjected to accelerated weathering according to ASTM D2898, with no evidence of significant progressive combustion when the test is extended an additional 20 minutes, and with the flame front not extending more than 10.5 feet (3.2 m) beyond the centerline of the burners at any time during the test.

1. Kiln-dry lumber and plywood after treatment to a maximum moisture content of 19 and 15 percent, respectively.
2. For items indicated to receive a stained, transparent, or natural finish, use organic resin chemical formulation.
3. Mill lumber after treatment within limits set for wood removal that do not affect listed fire-test-response characteristics, using a woodworking shop certified by testing and inspecting agency.
4. Mill lumber before treatment and implement procedures during treatment and drying processes that prevent lumber from warping and developing discolorations from drying sticks or other causes, marring, and other defects affecting appearance of treated woodwork.

C. Extent of Fire-Retardant-Treated Wood Materials:

1. Exterior architectural woodwork located more than 40 feet (12.192 m) above grade.
2. Exterior architectural woodwork in locations with a fire-separation distance of 5 feet (1.524 m) or less.

2.9 FASTENERS

A. General: Provide fasteners of size and type indicated, acceptable to authorities having jurisdiction, and that comply with requirements specified in this article for material and manufacture. Provide nails or screws, in sufficient length, to penetrate not less than 1-1/2 inches (38 mm) into wood substrate.

1. Use fasteners with hot-dip zinc coating complying with ASTM A153/A153M or ASTM F2329/F2329M unless otherwise indicated.
2. For pressure-preservative-treated wood, use stainless-steel fasteners.
3. For redwood, use hot-dip galvanized-steel fasteners.

B. Nails: ASTM F1667.

C. Power-Driven Fasteners: ICC-ES AC70.

D. Wood Screws and Lag Screws: ASME B18.2.1, ASME B18.6.1, or ICC-ES AC233.

E. Carbon-Steel Bolts: ASTM A307 with ASTM A563 (ASTM A563M) hex nuts and, where indicated, flat washers all hot-dip zinc coated.

F. Stainless-Steel Bolts: ASTM F593, Alloy Group 1 or 2; with ASTM F594, Alloy Group 1 or 2 (ASTM F836M, Grade A1 or Grade A4) hex nuts and, where indicated, flat washers.

G. Post installed Anchors: Stainless-steel anchors with capability to sustain, without failure, a load equal to 6 times the load imposed when installed in unit masonry assemblies and equal to 4 times the load imposed when installed in concrete as determined by testing according to ASTM E488/E488M conducted by a qualified independent testing and inspecting agency.

1. Stainless-steel bolts and nuts complying with ASTM F593 and ASTM F594, Alloy Group 1 or 2 (ASTM F836M, Grade A1 or Grade A4).

2.10 MISCELLANEOUS MATERIALS

A. Blocking, Shims, and Nailers: Softwood or hardwood lumber, kiln-dried to less than 15 percent moisture content.

1. Wood-Preservative Treatment: By pressure process, AWPA U1; Use Category UC3b.

a. Kiln-dry lumber after treatment to a maximum moisture content of 19 percent.
b. Preservative Chemicals: Acceptable to authorities having jurisdiction.
c. Mark lumber with treatment quality mark of an inspection agency approved by the American Lumber Standards Committee's (ALSC) Board of Review.

2. Fire-Retardant Treatment: Complying with requirements; provide where indicated on Drawings.

2.11 FABRICATION

A. Sand fire-retardant-treated wood lightly to remove raised grain on exposed surfaces before fabrication.

B. Fabricate exterior architectural woodwork to dimensions, profiles, and details indicated.

1. Ease edges to radius indicated for the following:

a. Edges of Solid-Wood (Lumber) Members: 1/16 inch (1.5 mm) unless otherwise indicated.
b. Edges of Rails and Similar Members More Than 3/4 Inch (19 mm) Thick: 1/8 inch (3 mm).

C. Complete fabrication, including assembly, to maximum extent possible before shipment to Project site.

1. Disassemble components only as necessary for shipment and installation.
2. Where necessary for fitting at site, provide allowance for scribing, trimming, and fitting.
3. Notify Architect seven days in advance of the dates and times exterior architectural woodwork fabrication will be complete.
4. Trial fit assemblies at fabrication shop that cannot be shipped completely assembled.

a. Install dowels, screws, bolted connectors, and other fastening devices that can be removed after trial fitting.
b. Verify that parts fit as intended, and check measurements of assemblies against field measurements indicated on approved Shop Drawings before disassembling for shipment.

2.12 SHOP PRIMING

A. Preparations for Finishing: Comply with the Architectural Woodwork Standards for sanding, filling countersunk fasteners, sealing concealed surfaces, and similar preparations for finishing exterior architectural woodwork, as applicable to each unit of work.

B. Backpriming: Apply one coat of sealer or primer, compatible with finish coats, to concealed surfaces of woodwork. Apply two coats to surfaces installed in contact with concrete or masonry and to end-grain surfaces.

C. Exterior Architectural Woodwork for Opaque Finish: Shop prime all surfaces with one coat of wood primer.

D. Exterior Architectural Woodwork for Transparent Finish:

1. Shop seal surfaces to be concealed
2. Shop seal exposed surfaces with stain (if specified), other required pretreatments, and first coat of finish.

2.13 SHOP FINISHING

A. Finish exterior architectural woodwork with transparent finish and/or as indicated on Drawings at fabrication shop. Defer only final touchup, cleaning, and polishing until after installation.

B. Preparation for Finishing: Comply with the Architectural Woodwork Standards for sanding, filling countersunk fasteners, sealing concealed surfaces, and similar preparations for finishing exterior architectural woodwork, as applicable to each unit of work.

1. Backpriming: Apply one coat of sealer or primer, compatible with finish coats, to concealed surfaces of exterior architectural woodwork. Apply two coats to end-grain surfaces.

C. Transparent Finish: Comply with Section 099300 "Staining and Transparent Finishing."

D. Opaque Finish: Comply with Section 099113 "Exterior Painting."

PART 3 - EXECUTION

3.1 PREPARATION

A. Before installation, condition exterior architectural woodwork to average prevailing humidity conditions at Project site.

B. Before installing exterior architectural woodwork, examine shop-fabricated work for completion, and complete work as required, including removing packing and backpriming concealed surfaces.

3.2 INSTALLATION

A. Grade: Install exterior architectural woodwork to comply with same grade as item to be installed.

B. Assemble exterior architectural woodwork, and complete fabrication at Project site to the extent that it was not completed during shop fabrication.

C. Install exterior architectural woodwork level, plumb, true in line, and without distortion.

1. Shim as required with concealed shims.
2. Install level and plumb to a tolerance of 1/8 inch in 96 inches (3 mm in 2400 mm).

D. Standing and Running Trim:

1. Install with minimum number of joints possible, using full-length pieces (from maximum length of lumber available) to greatest extent possible.
2. Do not use pieces less than **36 inches (900 mm)** long, except where shorter single-length pieces are necessary.
3. Scarf running joints and stagger in adjacent and related members.

E. Scribe and cut exterior architectural woodwork to fit adjoining work, refinish cut surfaces, and repair damaged finish at cuts.

F. Preservative-Treated Wood Materials: Where field cut or drilled, treat cut ends and drilled holes according to AWPA M4.

G. Fire-Retardant-Treated Wood Materials: Install fire-retardant-treated materials to comply with chemical treatment manufacturer's written instructions.

H. Anchor exterior architectural woodwork to anchors or blocking built in or directly attached to substrates.

1. Secure with countersunk, concealed fasteners and blind nailing.
2. Use fine finishing nails or finishing screws for exposed fastening, countersunk and filled flush with exterior architectural woodwork.
3. For exposed work, arrange fasteners in straight rows parallel with edges of members, with fasteners evenly spaced and with adjacent rows staggered.
4. For shop-finished items, use filler matching finish of items being installed.

I. Touch up finishing work specified in this Section after installation of exterior architectural woodwork.

1. Fill nail holes with matching filler where exposed.
2. Apply specified finish coats, including stains and paste fillers if any, to exposed surfaces where only sealer/prime coats are shop applied.

J. Field Finishing: See Section 099113 Exterior Painting and Section 099300 Staining and Transparent Finishing for final finishing of installed exterior architectural woodwork.

3.3 FIELD QUALITY CONTROL

A. Inspections: Provide inspection of installed Work through AWI's Quality Certification Program or WI's Certified Compliance Program certifying that woodwork, including installation, complies with requirements of the Architectural Woodwork Standards for the specified grade.

1. Inspection entity shall prepare and submit report of inspection.

3.4 REPAIR

A. Repair damaged and defective exterior architectural woodwork, where possible, to eliminate functional and visual defects.

B. Where not possible to repair, replace defective woodwork.

3.5 CLEANING

A. Clean exterior architectural woodwork on exposed and semi-exposed surfaces.

END OF SECTION 064013

SECTION 064113 - WOOD-VENEER-FACED ARCHITECTURAL CABINETS

PART 1 - GENERAL

1.1 RELATED DOCUMENTS

A. Drawings and general provisions of the Contract, including General and Supplementary Conditions and Division 01 Specification Sections, apply to this Section.

1.2 SUMMARY

A. Section Includes:
   1. Architectural wood cabinets.
   2. Wood furring, blocking, shims, and hanging strips for installing architectural wood cabinets unless concealed within other construction before cabinet installation.
   3. Shop finishing of architectural wood cabinets.

1.3 ACTION SUBMITTALS

A. Product Data: For each type of product, including panel products cabinet hardware and accessories and finishing materials and processes.
   1. Include data for fire-retardant treatment from chemical-treatment manufacturer and certification by treating plant that treated materials comply with requirements.

B. Shop Drawings: Show location of each item, dimensioned plans and elevations, large-scale details, attachment devices, and other components.
   1. Show details full size.
   2. Show locations and sizes of furring, blocking, and hanging strips, including concealed blocking and reinforcement specified in other Sections.
   3. Show locations and sizes of cutouts and holes for electrical switches and outlets and other items installed in architectural wood cabinets.
   4. Show veneer leaves with dimensions, grain direction, exposed face, and identification numbers indicating the flitch and sequence within the flitch for each leaf.
   5. Apply WI Certified Compliance Program label to Shop Drawings.
   6. Apply AWI Quality Certification Program label to Shop Drawings.

C. Samples for Initial Selection:
   1. Shop-applied transparent finishes.
   2. Shop-applied opaque finishes.
   3. PVC edge material.
   4. Thermoset decorative panels.

D. Samples for Verification:
   1. Lumber for transparent finish, not less than 5 inches wide by 12 inches long, for each species and cut, finished on one side and one edge.
   2. Veneer leaves representative of and selected from flitches to be used for transparent-finished cabinets.
   3. Lumber and panel products with shop-applied opaque finish, 5 inches wide by 12 inches long for lumber and 8 by 10 inches for panels, for each finish system and color, with[one-half of] exposed surface finished.
   4. Thermoset decorative panels, 8 by 10 inches, for each color, pattern, and surface finish[, with edge banding on one edge].
   5. Corner pieces as follows:
      a. Cabinet-front frame joints between stiles and rails, as well as exposed end pieces, 18 inches high by 18 inches wide by 6 inches deep.
   6. Exposed cabinet hardware and accessories, one unit for each type and finish.

1.4 INFORMATIONAL SUBMITTALS

A. Qualification Data: For fabricator.

B. Product Certificates: For the following:
   1. Composite wood and agrifiber products.
   2. Thermoset decorative panels.
   3. Glass.
   4. Adhesives.

C. Woodwork Quality Standard Compliance Certificates: AWI Quality Certification Program certificates.

1.5 QUALITY ASSURANCE

A. Fabricator Qualifications: Shop that employs skilled workers who custom fabricate products similar to those required for this Project and whose products have a record of successful in-service performance. Shop is a certified participant in AWI's Quality Certification Program.

B. Installer Qualifications: Certified participant in AWI's Quality Certification Program.

C. Mockups: Build mockups to verify selections made under Sample submittals and to demonstrate aesthetic effects and set quality standards for materials and execution.

1. Build mockups of typical architectural wood cabinets as shown on Drawings.
2. Subject to compliance with requirements, approved mockups may become part of the completed Work if undisturbed at time of Substantial Completion.

1.6 DELIVERY, STORAGE, AND HANDLING

A. Do not deliver cabinets until painting and similar operations that could damage woodwork have been completed in installation areas. If cabinets must be stored in other than installation areas, store only in areas where environmental conditions comply with requirements specified in "Field Conditions" Article.

1.7 FIELD CONDITIONS

A. Environmental Limitations: Do not deliver or install cabinets until building is enclosed, wet work is complete, and HVAC system is operating and maintaining temperature between 60 and 90 deg F and relative humidity between 25 and 55 percent during the remainder of the construction period.

B. Field Measurements: Where cabinets are indicated to fit to other construction, verify dimensions of other construction by field measurements before fabrication, and indicate measurements on Shop Drawings. Coordinate fabrication schedule with construction progress to avoid delaying the Work.

1. Locate concealed framing, blocking, and reinforcements that support cabinets by field measurements before being enclosed, and indicate measurements on Shop Drawings.

C. Established Dimensions: Where cabinets are indicated to fit to other construction, establish dimensions for areas where cabinets are to fit. Provide allowance for trimming at site, and coordinate construction to ensure that actual dimensions correspond to established dimensions.

1.8 COORDINATION

A. Coordinate sizes and locations of framing, blocking, furring, reinforcements, and other related units of Work specified in other Sections to ensure that wood-veneer-faced architectural cabinets can be supported and installed as indicated.

B. Hardware Coordination: Distribute copies of approved hardware schedule specified in Section 087111 "Door Hardware (Descriptive Specification)" to fabricator of architectural woodwork; coordinate Shop Drawings and fabrication with hardware requirements.

PART 2 - PRODUCTS

2.1 PRODUCTS, GENERAL

A. VOC Limits: any adhesives, sealants, paints, or coatings shall meet the VOC limits indicated in Section 018113.

B. Required Certification: A minimum of 50% of wood, calculated by cost, shall be obtained from forests certified by an FSC accredited certification body to comply with FSC STD-01-001, "FSC Principles and Criteria for Forest Stewardship."

C. Required Certification: Composite wood products shall contain No Added Urea-Formaldehyde (NAUF) in the product or laminating adhesives used to fabricate the product.

2.2 ARCHITECTURAL CABINET FABRICATORS

A. Fabricators: Subject to compliance with requirements, available fabricators offering products that may be incorporated into the Work include, but are not limited to, the following:

1. Brochsteins, Inc.
2. Robert Shaw Mfg. Co., Inc.
3. Environment Limited.
4. CRC Mastercraft, LLC, Khoury.

2.3 ARCHITECTURAL WOOD CABINETS, GENERAL

A. Quality Standard: Unless otherwise indicated, comply with the "Architectural Woodwork Standards" for grades of architectural wood cabinets indicated for construction, finishes, installation, and other requirements.

1. Provide labels and certificates from AWI certification program indicating that woodwork[, including installation,] complies with requirements of grades specified.
2. The Contract Documents contain selections chosen from options in the quality standard and additional requirements beyond those of the quality standard. Comply with those selections and requirements in addition to the quality standard.

2.4 WOOD CABINETS FOR TRANSPARENT FINISH

A. Grade: Custom.
B. Type of Construction: Frameless.
C. Cabinet and Door and Drawer Front Interface Style: Flush overlay.
D. Reveal Dimension: As indicated.
E. Panel Product for Exposed Surfaces:
   1. Exposed casework in non-wet areas: Medium-density fiberboard, Type A
   2. Exposed casework in semi-wet areas (restroom and breakrooms with sinks): Medium-density fiberboard, Type B
   3. Exposed casework in wet areas (laboratories, locker rooms, laundry area and cafeteria): Medium-density fiberboard, Type C
F. Wood for Exposed Surfaces: As indicated.
   1. Species: As indicated in drawings or Master Schedule.
   2. Cut: As indicated in drawings or Master Schedule.
   3. Grain Direction: As indicated in drawings or Master Schedule.
   4. Matching of Veneer Leaves: As indicated in drawings or Master Schedule.
   5. Veneer Matching within Panel Face: As indicated in drawings or Master Schedule.
   6. Veneer Matching within Room: Provide cabinet veneers in each room or other space from a single flitch with doors, drawer fronts, and other surfaces matched in a sequenced set with continuous match where veneers are interrupted perpendicular to the grain.
   7. Comply with veneer and other matching requirements indicated for blueprint-matched paneling.
G. Semiexposed Surfaces: Provide surface materials indicated below:
   1. Surfaces Other Than Drawer Bodies: Same species and cut indicated for exposed surfaces.
   2. Drawer Subfronts, Backs, and Sides: Solid-hardwood lumber, same species indicated for exposed surfaces.
   3. Drawer Bottoms: Hardwood plywood.
H. Dust Panels: 1/4-inch plywood or tempered hardboard above compartments and drawers unless located directly under tops.
I. Drawer Construction: Fabricate with exposed fronts fastened to subfront with mounting screws from interior of body.
   1. Join subfronts, backs, and sides with glued dovetail joints.

2.5 WOOD MATERIALS

A. Wood Products: Provide materials that comply with requirements of referenced quality standard for each type of woodwork and quality grade specified unless otherwise indicated.
   1. Do not use plain-sawn softwood lumber with exposed, flat surfaces more than 3 inches wide.
   2. Wood Moisture Content: 8 to 13 percent.
B. Composite Wood and Agrifiber Products: Provide materials that comply with requirements of referenced quality standard for each type of woodwork and quality grade specified unless otherwise indicated.
   1. Medium-Density Fiberboard: ANSI A208.2, Grade 130 , made with binder containing no urea formaldehyde.
      a. Type A : MDF, MR10 – ANSI A208.2, Grade 130.
      b. Type B: MDF, MR30 – ANSI A208.2, Grade 155.
      c. Type C: MDF, MR50 – ANSI A208.2, Grade 150
   2. Particleboard: ANSI A208.1, Grade M-2, made with binder containing no urea formaldehyde.
   3. Softwood Plywood: DOC PS 1.
   4. Veneer-Faced Panel Products (Hardwood Plywood): HPVA HP-1.
   5. Thermoset Decorative Panels: Particleboard or medium-density fiberboard finished with thermally fused, melamine-impregnated decorative paper and complying with requirements of NEMA LD 3, Grade VGL, for test methods 3.3, 3.4, 3.6, 3.8, and 3.10.
      a. Provide PVC or polyester edge banding complying with LMA EDG-1 on components with exposed or semi-exposed edges.

2.6 CABINET HARDWARE AND ACCESSORIES

A. General: Provide cabinet hardware and accessory materials associated with architectural cabinets except for items specified in Section 087100 "Door Hardware."

B. Frameless Concealed Hinges (European Type): BHMA A156.9, B01602, 135 degrees of opening, self-closing.
C. 1 inch deep.
D. Adjustable Shelf Standards and Supports: BHMA A156.9, B04071; with shelf rests, B04081.
E. Shelf Rests: BHMA A156.9, B04013; metal.
F. Drawer Slides: BHMA A156.9.
   1. Grade 1 and Grade 2: Side mounted; full-extension type; epoxy-coated steel with polymer rollers.
   2. Grade 1HD-100 and Grade 1HD-200: Side mounted; full-extension type; zinc-plated-steel ball-bearing slides.
   3. File Drawer Slides:
      a. Integrated drawer slide and side panel, full extension, self-closing feature with 2-5/8 inches (60 mm) self-closing range, built-in drawer front adjustment and bumpers, smooth, quiet travel, white baked-on epoxy finish.
   4. For drawers not more than 3 inches high and not more than 24 inches wide, provide Grade 2.
      a. Pencil drawer slides.
         1) Basis of Design: Zargen Grass; Unigrass System.
   5. For drawers more than 3 inches high but not more than 6 inches high and not more than 24 inches wide, provide Grade 1.
   6. For drawers more than 6 inches high or more than 24 inches wide, provide Grade 1HD-100.
   7. File Drawer Slides: Full extension member and file railing system.
   8. For computer keyboard shelves, provide Grade 1HD-100.
   9. For trash bins not more than 20 inches high and 16 inches wide, provide Grade 1HD-200.
G. Door Locks: BHMA A156.11, E07121.
H. Drawer Locks: BHMA A156.11, E07041.
I. Door and Drawer Silencers: BHMA A156.16, L03011.
J. Hanging Rail System for Wall Cabinets:
   1. Basis of Design: Hafele; Item No. 290.11.901 Wall and Rail and Suspension Fitting, Item No. 290.00.700 and 701.
K. Exposed Hardware Finishes: For exposed hardware, provide finish that complies with BHMA A156.18 for BHMA finish number indicated.
   1. Satin Stainless Steel: BHMA 630.
L. For concealed hardware, provide manufacturer's standard finish that complies with product class requirements in BHMA A156.9.

2.7 MISCELLANEOUS MATERIALS

A. Furring, Blocking, Shims, and Hanging Strips: Softwood or hardwood lumber, kiln dried to less than 15 percent moisture content.
B. Anchors: Select material, type, size, and finish required for each substrate for secure anchorage. Provide metal expansion sleeves or expansion bolts for post-installed anchors. Use nonferrous-metal or hot-dip galvanized anchors and inserts at inside face of exterior walls and at floors.
C. Adhesives: Do not use adhesives that contain urea formaldehyde.

2.8 FABRICATION

A. Fabricate woodwork to dimensions, profiles, and details indicated. Ease edges to radius indicated for the following:
   1. Corners of Cabinets: 1/16 inch unless otherwise indicated.
B. Complete fabrication, including assembly, finishing, and hardware application, to maximum extent possible before shipment to Project site. Disassemble components only as necessary for shipment and installation. Where necessary for fitting at site, provide ample allowance for scribing, trimming, and fitting.
   1. Notify Architect seven days in advance of the dates and times woodwork fabrication will be complete.
   2. Trial fit assemblies at fabrication shop that cannot be shipped completely assembled. Install dowels, screws, bolted connectors, and other fastening devices that can be removed after trial fitting. Verify that various parts fit as intended and check measurements of assemblies against field measurements before disassembling for shipment.
C. Shop-cut openings to maximum extent possible to receive hardware, appliances, electrical work, and similar items. Locate openings accurately and use templates or roughing-in diagrams to produce accurately sized and shaped openings. Sand edges of cutouts to remove splinters and burrs.

2.9 SHOP FINISHING

A. General: Finish architectural wood cabinets at fabrication shop as specified in this Section. Defer only final touchup, cleaning, and polishing until after installation.

B. Preparation for Finishing: Comply with referenced quality standard for sanding, filling countersunk fasteners, sealing concealed surfaces, and similar preparations for finishing architectural wood cabinets, as applicable to each unit of work.
   1. Backpriming: Apply one coat of sealer or primer, compatible with finish coats, to concealed surfaces of cabinets.

C. Transparent Finish:
   1. Grade: Custom.
   2. Finish: System - 11, catalyzed polyurethane.
   3. Staining: Match approved sample for color.
   4. Open Finish for Open-Grain Woods: Do not apply filler to open-grain woods.
   5. Filled Finish for Open-Grain Woods: After staining, apply wash-coat sealer and allow to dry. Apply paste wood filler and wipe off excess. Tint filler to match stained wood.
   6. Sheen: Satin, 31-45 gloss units measured on 60-degree gloss meter per ASTM D 523.

PART 3 - EXECUTION

3.1 PREPARATION

A. Before installation, condition cabinets to average prevailing humidity conditions in installation areas.

B. Before installing cabinets, examine shop-fabricated work for completion and complete work as required, including removal of packing and backpriming.

3.2 INSTALLATION

A. Grade: Install cabinets to comply with same grade as item to be installed.

B. Assemble cabinets and complete fabrication at Project site to the extent that it was not completed in the shop.

C. Install cabinets level, plumb, true, and straight. Shim as required with concealed shims. Install level and plumb to a tolerance of 1/8 inch in 96 inches.

D. Scribe and cut cabinets to fit adjoining work, refinish cut surfaces, and repair damaged finish at cuts.

E. Anchor cabinets to anchors or blocking built in or directly attached to substrates. Secure with countersunk, concealed fasteners and blind nailing. Use fine finishing nails or finishing screws for exposed fastening, countersunk and filled flush with woodwork.
   1. For shop finished items use filler matching finish of items being installed.

F. Cabinets: Install without distortion so doors and drawers fit openings properly and are accurately aligned. Adjust hardware to center doors and drawers in openings and to provide unencumbered operation. Complete installation of hardware and accessory items as indicated.
   1. Install cabinets with no more than 1/8 inch in 96-inch sag, bow, or other variation from a straight line.
   2. Maintain veneer sequence matching of cabinets with transparent finish.
   3. Fasten wall cabinets through back, near top and bottom, and at ends not more than 16 inches o.c. with No. 10 wafer-head screws sized for not less than 1-1/2-inch penetration into wood framing, blocking, or hanging strips.

G. Touch up finishing work specified in this Section after installation of woodwork. Fill nail holes with matching filler where exposed.
   1. Apply specified finish coats, including stains and paste fillers if any, to exposed surfaces where only sealer/prime coats are applied in shop.

3.3 ADJUSTING AND CLEANING

A. Repair damaged and defective cabinets, where possible, to eliminate functional and visual defects; where not possible to repair, replace woodwork. Adjust joinery for uniform appearance.

B. Clean, lubricate, and adjust hardware.

C. Clean cabinets on exposed and semiexposed surfaces. Touch up shop-applied finishes to restore damaged or soiled areas.

END OF SECTION 064113

SCIENCE. SERVICE. SOLUTIONS.

CARLISLE COATINGS & WATERPROOFING

WATERPROOFING

MiraSTOP™ CG-HS

Description

MiraSTOP CG-HS is a **C**hemical **G**rout with **H**igh **S**trength once it is combined with MiraSTOP CG-HS CAT (Catalyst) and then allowed to react with water. This one-component, solvent-free, high-expansion, high-strength polyurethane injection resin is mainly used for wet cracks and water cutoff applications and has a free expansion of +4,000%.

The reaction speed can be adapted easily by varying the catalyst content from 6% to 10%. The more catalyst is added, the faster the reaction time will be. The reaction with water yields a flexible polyurethane foam with closed cells that will neither shrink nor swell. A high compression strength is obtained in very short time.

Installation

Pour the MiraSTOP CG-HS resin into a dry, clean 5-gal pail. Shake the MiraSTOP CG-HS CAT well and add to the resin in a ratio of 6% to 10% in function of the desired reaction speed (refer to Reaction Time Chart). Stir until sufficiently mixed and without streaks.

Use a one-component pump dedicated specifically to MiraSTOP polyurethane chemical grouts. Pumps should be cleaned with MiraSTOP Pump Flush, a cleaning agent specially developed for cleaning of polyurethane injection pumps.

Refer to ASTM D8109 - Standard Guide for Waterproofing Repair of Concrete by Chemical Grout Crack Injection for joint/crack preparation, port spacing, port drilling procedures, packer placement, and grout injection procedures

MiraSTOP CG-HS is very hygroscopic and packed under dry atmosphere. Use opened containers as soon as possible.

Reaction Time*

Catalyst Dosage	Reaction Speed	Polymerization
6%	15 seconds	70 seconds
8%	12 seconds	55 seconds
10%	9 seconds	45 seconds

*Typical times measured at room temperature.

Packaging

MiraSTOP CG-HS is supplied in 5-gal metal pails, 36 pails (180 gal) per pallet.

MiraSTOP CG-HS CAT is supplied in 32 oz. cans, 8 cans per carton, 60 cartons (480 cans) per pallet.

Availability

Available through local CCW and Henry® Representatives or Distribution. Visit www.carlisleccw.com or www.henry.com to contact us, or select "Find a Rep or Distributor."

Limitations

MiraSTOP CG-HS resin must be used with MiraSTOP CG-HS CAT.

Warnings and Hazards

Review Safety Data Sheets before handling; available online at www.carlisleccw.com or www.henry.com.

Do not breathe dust, fumes, mist, vapor, or spray. In case of inadequate ventilation, wear proper respiratory protection.

Wear proper protective gloves, clothing, and eye/face protection.

SCIENCE. SERVICE. SOLUTIONS.

CARLISLE COATINGS & WATERPROOFING

WATERPROOFING
MiraSTOP CG-HS

Storage

To avoid problems, it is very important to understand that both the MiraSTOP CG-HS resin and MiraSTOP CG-HS CAT are temperature- and moisture-sensitive. Always store resin and catalyst in a protected and dry location in original, unopened containers. Do not store in direct sunlight or in temperatures below 50°F (10°C) or above 86°F (30°C).

For best results, acclimate both the resin and catalyst at temperatures between 65–75°F (18–24°C) for a minimum of 24 hours prior to application.

When stored at temperatures between 50–86°F (10–30°C) in the original, unopened containers, shelf life for both the resin and catalyst is 12 months.

Disposal

Uncured resin and catalyst are considered hazardous materials and must be handled and disposed as such, in accordance with local, state, and federal regulations.

Physical Properties

Property	Typical Value	Test Method
MiraSTOP CG-HS Resin		
Density	72,29 lb/ft³	EN ISO 2811-2:2002
Viscosity	96 mPa.s	EN ISO 3219:1994
Isocyanate	18,1 M.-%	EN 1242:2006
Flash Point	> 300°F	
Color	Brown	
MiraSTOP CG-HS CAT (Catalyst)		
Density	55,50 lb/ft³	EN ISO 2811-2:2002
Viscosity	21 mPa.s	EN ISO 3219:1994
Flash Point	> 300°F	
Color	Transparent	
MiraSTOP CG-HS Cured Grout		
Density Free Foam	2.2 lbs. PC Ft	ASTM D3574
Density Confined	87.4 lbs. per ft. 1.4 g/cm³	ASTM D3574 EN ISO 2811
Compressive Strength	40 – 4,200 psi	Contingent on confinement

Limited Warranty

Carlisle Coatings & Waterproofing Incorporated (Carlisle) warrants this product to be free of defects in workmanship and materials only at the time of shipment from our factory. If any Carlisle materials prove to contain manufacturing defects that substantially affect their performance, Carlisle will, at its option, replace the materials or refund its purchase price. This limited warranty is the only warranty extended by Carlisle with respect to its materials. There are no other warranties, including the implied warranties of merchantability and fitness for a particular purpose. Carlisle specifically disclaims liability for any incidental, consequential, or other damages, including but not limited to, loss of profits or damages to a structure or its contents, arising under any theory of law whatsoever. The dollar value of Carlisle's liability and buyer's remedy under this limited warranty shall not exceed the purchase price of the Carlisle material in question.

Carlisle Coatings & Waterproofing
900 Hensley Lane | Wylie, TX 75098 | 800.527.7092 | **www.carlisleccw.com**

02.01.22 © 2022 Carlisle.

Carlisle, Henry and MiraSTOP are trademarks of Carlisle.

SECTION 07 16 04
CONCRETE FLOOR MOISTURE TESTING

PART 1 - GENERAL

1.1 SUMMARY

A. Furnish labor, materials, tools, equipment, and services for Concrete Floor Moisture Testing in accordance with provisions of Contract Documents.

B. Completely coordinate with Section 07 16 05, Water Vapor Emission Control System, and work of other trades.

C. Contractor's Responsibilities:
1. Provide pre-installation coordination with concrete and space acclimatization trades upon building enclosure.
2. Facilitate testing and inspection and furnish labor to assist Owner's testing agency at site.
3. Advise Owner's testing agency sufficiently in advance of operations to allow for completion of routine testing and for assignment of personnel.

1.2 QUALITY ASSURANCE

A. Section includes testing agency administrative and procedural requirements for quality assurance and quality control in performing concrete moisture testing for compliance with floor finishes.

B. Testing and inspection services are required to verify compliance with requirements specified or indicated and do not relieve Contractor's responsibility for compliance with Contract Document requirements.

C. Testing Agency Qualifications:
1. Firm experienced in field of concrete floor moisture testing for projects similar in scope, material, design, and extent indicated for this Project.
2. International Concrete Repair Institute (ICRI) Certified in moisture and pH testing, conducting ASTM tests, and interpretation of results.

D. ASTM International (ASTM):
1. ASTM F710 Standard Practice for Preparing Concrete Floors to Receive Resilient Flooring
2. ASTM F2170 Standard Test Method for Determining Relative Humidity in Concrete Slabs Using in situ Probes

1.3 SUBMITTALS

A. See Section 01 33 00 for requirements.

B. Product Data:
1. For each type of material and accessory.

C. Project Information:
1. Prepare schedule of tests and inspections in tabular form to include following:
   a. Specification Section number and title.
   b. Description of test and inspection method.
   c. Identification of applicable standards.
   d. Identification of test and inspection methods.
   e. Number of tests and inspections required.
   f. Time schedule or time span for tests and inspections.
   g. Entity responsible for performing tests and inspections.
   h. Requirements for obtaining samples.
   i. On elevated slabs on metal deck, test at deepest portion of deck flute.
   j. Each test shall be identified by its own unique number directly on concrete and site map.

k. Digital pictures of testing methods in place.

2. Submit reports of test results and include following:
   a. Date of issue.
   b. Project title and number.
   c. Name, address, and telephone number of testing agency.
   d. Dates and locations of samples and tests or inspections.
   e. Names of individuals making tests and inspections.
   f. Description of Work and test and inspection method.
   g. Record for each test listing interior temperature, interior humidity, concrete internal RH, moisture vapor, and alkalinity results for testing period for both new or existing concrete slabs or both.
   h. Test and inspection results and an interpretation of test results.
   i. Provide electronic copy of Architectural Floor Plans identifying each test by number and location where conducted.
   j. Name and signature of laboratory inspector.
   k. Recommendations on retesting and re-inspection.
3. Testing equipment and devices used to conduct tests:
   a. Product data for components.
   b. Date of most recent calibration as required by manufacturer.

D. Contract Closeout Information:
   1. Testing Agency shall include closeout document including testing reports, test location maps, submittal information for installed below grade vapor barrier, concrete mix designs, admixtures, curing methods and moisture control products utilized on project.

1.4 SEQUENCING

A. Owner Responsibilities:
   1. Owner shall engage qualified Testing Agency to perform testing specified herein.
   2. Payment for testing services will be made by Owner directly to testing agency.
   3. Costs for retesting and reinspection construction that replaces or is necessitated by work that failed to comply with the Contract Documents shall be paid by Owner and charged to Contractor by an adjustment to Contract Sum through a Change Order.

B. Testing Agency Responsibilities:
   1. Cooperate with Contractor and Architect in performance of duties.
   2. Provide qualified personnel to perform required tests and inspections.
      a. Provide documented confirmation of previous projects completed of similar size and scope of proposed project.
      b. Technicians conducting or overseeing performance of moisture testing are required to be International Concrete Repair Institute (ICRI) certified to Grade 1, Moisture Testing Technician level.
   3. Notify Contractor and Architect promptly of irregularities or deficiencies observed in Work during performance services.
   4. Determine locations from which test samples will be taken.
   5. Provide test results marked on finish floor plan drawings showing test results with vapor reduction system recommendations.
   6. Conduct and interpret tests and inspections and state in each report whether tested and inspected work complies with or deviates from requirements.
   7. Submit a certified written report for each test, inspection, and similar quality assurance service to Owner, Architect, and Contractor.

C. Schedule of Tests and Inspections:
   1. Allow adequate time for results of tests, inspections and moisture control system to conclude prior to erection of interior walls, fixtures and equipment.
   2. Prepare a schedule of tests, inspections, and similar quality control services required by Contract Documents.

3. Submit schedule within 30 days of date established for Notice to Proceed.
4. Distribute schedule to Owner, Architect, Contractor, testing agencies, and each party involved in performance of portions of Work where tests and inspections are required.
5. Preinstallation Conference:
   a. Testing Agency, Owner, Architect, and Contractor shall meet 90 days prior to flooring installation to discuss testing requirements, specifications, and locations of test sites.

D. Acclimate building to working environment as required by manufacturer requirements of specified flooring materials and in accordance with ASTM F2170 requirements.

PART 2 - PRODUCTS

2.1 MANUFACTURERS

A. Base:
   1. Wagner Electronics.

B. Optional:
   1. American Moisture Test.
   2. Delmhorst Instrument Co.
   3. Tramex.

2.2 MATERIALS

A. Testing equipment shall be from single source, meeting specified requirements:
   1. Alkalinity (pH): ASTM F710.
      a. Wide Range 1-14pH.
   2. Moisture Vapor Emission Rate (MVER): ASTM F1869.
      a. Weight of water evaporation.
   3. Relative humidity (RH): ASTM F2170.
      a. Relative humidity range of 0-100 PCT.

PART 3 - EXECUTION

3.1 EXAMINATION

A. Verify building weatherproof, exterior doors installed and windows secured.

B. Begin testing process when concrete installation is minimum 90 days of age.

3.2 PREPARATION

A. Prepare test sites per ASTM F710 and ASTM F2170.

B. Conditioning: Minimum 48 HRS prior to testing:
   1. Concrete floor slabs: Service temperature.
   2. Occupied air space above the floor slab: Service temperature.
   3. Occupied air space relative humidity above floor slab: Service humidity.
   4. Continue conditioning required until and during floor installation and adhesive cure.

C. Clearly mark each test location on floor plan and directly on concrete surface with non-removable marker.

3.3 TESTING

A. Test concrete for each area of each non-permeable flooring type.

B. Perform tests at rate of 3 tests for areas up to 1000 SQFT , and 1for each 1000 SQFT thereafter.

C. HVAC system shall be operational during testing period and for a minimum period of 60 days preceding tests.
   1. Record temperature and humidity readings at start and end of testing.

2. Continue conditioning after flooring installation as required by applicable manufacturers.
3. If proper conditions cannot be achieved during construction process and testing is performed results shall be used as preliminary information only.
    a. Re-testing when conditions are achieved or application of Section 07 16 05 scope is required.

D. Perform in-situ probe tests per probe manufacturer's specifications with regard to temperature and humidity of space being tested.
1. Proof of calibration is required for each sensor or testing apparatus prior to use.
2. Test conditions: Service temperature and humidity.

E. Perform digital Alkalinity (pH) tests within water vapor emission test dome.
1. Test in accordance with ASTM F710 and manufacturer's recommendations.
2. Apply manufactures recommended liquid to form 1 IN diameter puddle.
3. Allow liquid to absorb for 60 seconds.
4. Expose probe to liquid and allow meter to calculate pH level for 10 seconds.
5. Document results to nearest hundredth.

F. Perform Relative Humidity (RH) tests.
1. Test in accordance with ASTM F2170 and manufacturer's recommendations.
2. Drill hole to diameter and length required for concrete thickness.
3. Remove concrete debris by compressed air and vacuuming holes.
4. Place RH probe sleeve in opening, secure cap and allow acclimating for minimum 72 HRS.
5. Protect from wet work and trade traffic.

G. Acceptable readings during HVAC operation shall be in accordance with following:
1. Relative Humidity Level per ASTM F2170: Less than 75 PCT.
2. Alkalinity-pH per ASTM F710: Acceptable Range 7.0 pH to 10.0 pH.

H. Section 07 16 05 Water Vapor Emission Control System is required where test results are found unacceptable per flooring manufacturer installation recommendations and requirements.

3.4 POST-INSTALLATION TESTING

A. Coordinate and conduct tests for moisture vapor emissions and alkalinity reductions to comply with specifications prior to placement of self-leveling cementitious surfacing.

B. Repair and re-test locations where system is found to be deficient prior to commencement of topping installation and scheduled floor covering products.

END OF SECTION

SECTION 07 16 05
WATER VAPOR EMISSION CONTROL SYSTEM

PART 1 - GENERAL

1.1 SUMMARY

A. Furnish labor, materials, tools, equipment, and services for Water Vapor Emission Control System, as indicated, in accordance with provisions of Contract Documents.

B. Coordinate with Section 07 16 04, Concrete Floor Moisture Testing, and work of other trades.

1.2 SYSTEM DESCRIPTION

A. Water Vapor Emission Control System:
   1. Two component fluid applied epoxy based coating which restricts excessive levels of relative humidity and extreme alkalinity readings at below-grade, on-grade and suspended concrete floor slabs for compliance with subsequent floor coverings or coating materials.
   2. Primer:
      a. One or two component non-porous moisture tolerant primer as recommended by manufacturer of control system.
   3. Cementitious Surfacing:
      a. Self-leveling, calcium aluminate base formula.
      b. Compressive strength: 4,100 PSI minimum.
      c. Nominal thickness of 1/8 IN to1/4 IN over treated floor surface as required by system manufacturer.
      d. Provide smooth porous substrate suitable for application of finish flooring and moisture absorption from adhesive.
   4. Provide 100 percent coverage of interior on grade, below grade, and slab on deck floor areas.

1.3 QUALITY ASSURANCE

A. Manufacturer Qualifications:
   1. Minimum five (5) years in production of water vapor emission control system products.
   2. Meet source limitations and assume responsibility for performance of materials supplied by or approved by manufacturer.
   3. Product Liability Insurance in amount of not less than five (5) million dollars per occurrence.
   4. Warranty program covering cost associated with correction of system component failure, labor and collateral product failure as result, per section warranty requirements.

B. Installer Qualifications:
   1. Firm with not less than five (5) years of successful installations.
   2. Equipment required to prepare concrete and apply products per manufacturer's requirements for warranted installation.
   3. Submit minimum of five (5) project references of similar size and scope.
   4. Personnel employed by, trained or certified by, system manufacturer.

C. Single source responsibility for Water Vapor Emission Control System including but not limited to:
   1. Mechanical preparation of concrete surfaces.
   2. Application of system components.
   3. Placement of cementitious surfacing.

D. Install specified, or Manufacturer approved, products from one source to provide compatible products of consistent quality in appearance and physical properties.

E. American Concrete Institute (ACI):

1. ACI 302.2R-06 Guide for Concrete Slabs that Receive Moisture-Sensitive Flooring Materials.

F. ASTM International (ASTM):
   1. ASTM D1308 Standard Test Method for Effect of Household Chemicals on Clear and Pigmented Organic Finishes.
   2. ASTM D7234 Standard Test Method for Pull-Off Adhesion Strength of Coatings on Concrete Using Portable Pull-Off Adhesion Testers
   3. ASTM E96/E96M Standard Test Methods for Water Vapor Transmission of Materials
   4. ASTM F710 Preparing Concrete Floors to Receive Resilient Flooring
   5. ASTM F1869 Standard Test Method for Measuring Moisture Vapor Emission Rate of Concrete Subfloor using Anhydrous Calcium Chloride
   6. ASTM F2170 Standard Test Method for Determining Relative Humidity-RH in Concrete Floor Slabs Using in situ Probes.
   7. ASTM F3010 Standard Practice for Two-Component Resin Based Membrane Forming Moisture Mitigation Systems for Use Under Resilient Floor Coverings

G. Provide products that do not contain, or are classified as:
   1. More than 65 g/liter VOC content.

H. Preconstruction Conference:
   1. See Section 01 31 19.

1.4 SUBMITTALS

A. Product Data:
   1. Manufacturers' product data sheets, details and installation instructions including components and accessories, indicating product used in compliance with specifications.

B. Project Information:
   1. Independent ASTM testing reports.
   2. Manufacturer's installer certificate.
   3. Sample certificate of Warranty.
   4. Sample certificate of Product Liability Insurance.
   5. Manufacturer certification products comply with 1.3 Quality Assurance requirements.
   6. Minutes from Preinstallation Conference.

C. Contract Closeout Information:
   1. Warranty:
      a. Provide upon completion of Water Vapor Emission Control System installation.
   2. Certificate of Product Liability Insurance.
   3. Test result documentation of post cure and post seal control application for alkalinity- pH tests.
      a. Indicate test locations and results on electronic copy of floor plans.

1.5 SPECIAL WARRANTY

A. Provide manufacturer materials and labor for repair or replacement of damaged finish flooring system and remedial work to replace Water Vapor Emission Control System in event of treatment system failure for a period of fifteen (15) years, including:
   1. Deficiencies in system resulting from installation or manufacturing defects.
   2. Material and labor to replace damaged finish flooring due individually, or a combination of, concrete moisture, relative humidity, or alkalinity from substrate originated sources, joints, or cracks.
   3. Concrete cracks, joints and slab imperfections after application.
   4. Mitigation of biological growth, if present.
   5. ACI-318, dew point, concrete salts, admixtures, resin, and silicate surface treatments.

B. Provide warranty underwritten by product liability insurance carrier having a minimum Secure "A" rating by A. M. Best, or equivalent rating system, in amount of five million dollars ($5,000,000) per occurrence.

C. Submit warranty as confirmation of compliance with warranty requirements prior to commencement of finished flooring materials.
   1. Include statement that substrate is prepared and ready to accept commercial floor covering products specific to project requirements.

PART 2 - PRODUCTS

2.1 MANUFACTURERS

A. Water Vapor Emission Control System:
   1. Base:
      a. Allied Construction Technologies, AC Tech 2170.
      b. Apac, Apac 70.
      c. Aquafin International, Vaportight Coat SG3.
      d. Ardex Engineered Cements, MC Rapid Moisture Control.
      e. Concrete Curative Systems, LLC. CCS - S2 Fast Cure System
      f. Koster American, VAP I 2000.
      g. Mapei, Planiseal VS or Mapei Planiseal VS Fast.

B. Other Manufacturers desiring approval comply with provisions in Section 01 25 00.

2.2 DESIGN CRITERIA

A. Water Vapor Emission Control System Performance:
   1. Spread rate of water vapor emission control system shall maintain tolerances with following performance requirements after application:
      a. Alkalinity (pH) resistance per ASTM F710: 14pH, 100 percent resistant.
      b. Relative Humidity (RH) per ASTM F2170: 100 percent RH tolerant.
      c. Moisture Vapor Emissions Rate (MVER) per ASTM F1869:
         1) No upper moisture limit:
   2. Adhesion strength per ASTM D7234: 100 percent concrete failure.

2.3 MATERIALS

A. Moisture Control System:
   1. For use over normal and lightweight concrete floor slabs, suspended, on grade and below grade.
   2. Two component fluid applied topical mitigation system.
   3. High density 100 percent solids epoxy resin.

B. Primer:
   1. As required and approved by manufacturer.

C. Cementitious Surfacing:
   1. 4,100 PSI minimum.

D. Testing: See Section 07 16 04.
   1. Concrete alkalinity-pH, and relative humidity-RH testing.

PART 3 - EXECUTION

3.1 EXAMINATION

A. Review concrete mix designs, admixtures, below slab vapor barrier and curing methods.

B. Install in accordance with control system manufacturer instructions in compliance with independent testing agency test reports for digital alkalinity-pH per ASTM F710 and relative humidity RH per ASTM F2170.

C. Installation constitutes acceptance of substrate and responsibility for system performance.

3.2 PREPARATION

A. Edge grind near wall base, columns, edges and difficult to reach areas prior to shot blasting.

B. Abrade concrete surfaces using No. 390 - 420 shot to create an International Concrete Repair Institute (ICRI) No. 3 -5 profile or as recommended by water vapor emission control system manufacturer.

C. Overlap edge grinding.

D. Clean joints using a crack chasing blade to remove debris.

E. Broom-sweep and vacuum surfaces slab surfaces to remove dust and debris.

F. Do not use clean sweeping agents or chemicals to clean surface.

3.3 INSTALLATION

A. Install system components with manufacturer trained, certified or employed personnel.

B. Saturate cracks and joints with control system material to seal inner walls of crack or joint, then fill with flexible sealant or control system as recommended by manufacturer.

C. Apply control system coating and surface irregularities with manufacturer approved two-component epoxy resin fill and allow to cure and set prior to application of control system coating at rate recommended by manufacturer based upon test data.

D. Allow to cure and set in accordance with manufacturers recommendations.

E. Verify product thickness using a digital mil gauge at minimum of twenty (20) locations.
   1. Report results to manufacture’s technical representative for written approval and warranty registration.

F. Install cementitious surfacing after mil thickness testing verifies proper application rates of control system and testing reveals success in application

G. If required by cementitious surfacing installation, apply primer over control system surfaces at rate and cure as recommended by manufacturer.

H. Place cementitious surfacing a minimum of 1/8 IN to 1/4 IN thickness over substrate to produce smooth flooring compatible surface.

I. Protect finished surfaces from construction damage, contamination of oil, grease, paint, excess water, and sweeping compounds prior to installation of finish flooring materials.

3.4 FIELD QUALITY CONTROL

A. Prior to placement of cementitious surfacing, conduct post-installation testing for moisture vapor emissions and alkalinity at areas receiving Water Vapor Emission Control System.
   1. See Section 07 16 04.

B. Correct deficiencies as recommended by manufacturer of Water Vapor Emission Control System, where tests do not meet specified levels.

C. Final surfaces shall be compatible with floor coverings and require no special floor adhesives or methods and confirm products meet or exceed requirements of flooring covering sections.

END OF SECTION

SECTION 072100 - THERMAL INSULATION

PART 1 - GENERAL

1.1 SECTION REQUIREMENTS

A. Submittals: Product Data

B. Surface-Burning Characteristics: According to ASTM E 84 by a qualified testing agency. Identify products with appropriate markings of applicable testing agency.

PART 2 - PRODUCTS

2.1 INSULATION PRODUCTS

A. Glass-Fiber-Blanket Insulation: ASTM C 665, **Type I, unfaced** Sound batt insulation between toilet rooms with flame-spread and smoke-developed indexes of 25 and 450, respectively.

1. Manufacturers:[**One of the following:**]

a. CertainTeed Corporation.
b. Guardian Building Products, Inc.
c. Johns Manville.
d. Knauf Insulation.
e. Owens Corning.
f. <**Approved equal**>.

PART 3 - EXECUTION

3.1 INSTALLATION

A. Install insulation in areas and in thicknesses indicated or required to produce R-values indicated. Cut and fit tightly around obstructions and fill voids with insulation.

B. Maintain 3-inch (76-mm) clearance of insulation around recessed lighting fixtures not rated for or protected from contact with insulation.

C. Except for loose-fill insulation and insulation that is friction fitted in stud cavities, bond units to substrate with adhesive or use mechanical anchorage to provide permanent placement and support of units.

D. Spray-Applied Insulation: Apply insulation according to manufacturer's written instructions. Do not apply insulation until installation of pipes, ducts, conduits, wiring, and electrical outlets in walls is completed and items not indicated to receive insulation are masked. After insulation is applied, make flush with face of studs.

END OF SECTION 072100

SECTION 072726 - FLUID-APPLIED MEMBRANE AIR BARRIERS

PART 1 - GENERAL

1.1 SECTION REQUIREMENTS

A. Submittals: Product Data.

1.2 QUALITY ASSURANCE

A. Manufacturer: Obtain primary materials from a single manufacturer regularly engaged in manufacturing air and vapor barrier membranes. Obtain secondary materials from a source acceptable to the primary materials manufacturer.

B. VOC Regulations: Provide products which comply with applicable regulations controlling the use of volatile organic compounds for the specific authority having jurisdiction.

C. Field Quality Assurance: Implement the ABAA Quality Assurance Program requirements. Cooperate with ABAA inspectors and independent testing and inspection agencies engaged by the owner. Do not cove air and vapor barrier until it has been inspected, tested and accepted.

D. Mock-Ups: Build mock-up of representative of primary exterior wall assemblies and glazing assemblies, including backup wall and typical penetrations. Mock up shall be suitable for testing.

1.3 WARRANTY

A. Material Warranty: Provide manufacturer's standard product warranty, for a minimum of 3 years from date of substantial completion.

B. Installation Warranty: Provide air barrier subcontractor's 2 year warranty from date of Substantial Completion, including all components of the air and vapor barrier assembly, against failures including loss of air tight seal, loss of watertight seal, loss of adhesion, loss of cohesion, failure to cure properly.

PART 2 - PRODUCTS

2.1 PERFORMANCE REQUIREMENTS

A. Air-Barrier Assembly Air Leakage: Maximum **0.04 cfm/sq. ft. of surface area at 1.57 lbf/sq. ft. (0.2 L/s x sq. m of surface area at 75 Pa)**, when tested according to ASTM E 283, ASTM E 783, or ASTM E 2357, and ASTM E 2178.

2.2 MATERIALS

A. Fluid Applied Air and Vapor Barrier: Fluid applied proprietary materials as specified. Us regular or low-temperature formulation depending on the site conditions, within temperature ranges specified by the manufacturer. Provide related accessories including primer, seam tape, mastic,, fluid and sealant recommended by the manufacturer. Subject to compliance with requirements, provide one of the following:

1. BASF Corporation- Wall Systems:
   a. Fluid Applied Air Barrier Membrane: Enershield-I, Senershield-VB, Finestop-VB.
   b. Fabric Reinforcement: Sheathing Fabric to be saturated with BASF Fluid Applied Membrane for use at sheathing joints, penetrations and window rough openings.
   c. Flashing and Transition Membrane: TF Membrane / WS Flash polyester-faced 30-mil self-adhesive membrane or TF Wrap / WS Wrap polyethylene-faced 20 mil self-adhesive membrane.
   d. Water-based Primer for Slef-Adhesive Membranes: WS Flashing Primer.
   e. Mastics: As recommended by manufacturer.
2. Carlisle Coatings & Waterproofing Inc.
   a. Fluid Applied Air and Vapor Barrier: Fire-Resist Barritech NP, 70 to 80 mils thick (wet).
   b. Detail Flashing: Fire-Resisti 705 FR
   c. Counterflashing for Metal Wall Flashing: Fire-Resist 705 FR
   d. Water based primer for Detail Flashing: CCW-702 WB
   e. Solvent based primer for Detail Flashing: CCW-702 or CCW-702 LV.
   f. Solvent-based Aerosol primer for Detail Flashing: CAV-GRIP.
   g. Reinforcing Fabric: DCH Reinforcing Fabric.
   h. Glass Mat: Liquifiber-W
   i. Termination Mastic: SURE_SEAL Lap Sealant.
   j. Fill Compound: CCW-201 or CCW-703V.
3. Grace Construction Products:
   a. Fluid Applied Air and Vapor Barrier: Perm-A-Barrier Liquid, 60 mils thick (wet).
   b. Water-Based Primer for Flashing, Transition strip and Detail Membrane: Perm-A-Barrier WB Primer.
   c. Solvent-Based Primer for Flashing, Transition Strip and Detail Membrane: Bituthene Primer B-2 and Bituthene Primer B@ LVC.
   d. Through Wall Flashings or Shelf Angle Flashings: Perm-A-Barrier Wall Flashing.
   e. Mastics, Adhesives and Tapes: As recommended by Grace Construction Products.
   f. Transition Strip: Perm-A-Barrier Detail Membrane and Perm-A-Barrier Wall Flashing.
   g. Termination Mastic: Bituthene Liquid Membrane and as recommended by Grace Construction Products.
   h. Window Flashing and Detail Membrane: Perm-A-Barrier Detail Membrane and Perm-A-Barrier Wall Flashing.
4. Henry Company
   a. Fluid Applied Air and Vapor Barrier, Low VOC: Air Bloc 32MR, 75 to 115 mils thick (wet)
   b. Transition Membrane: Blueskin SA and Blueskin SA LT for low-temperature applications.
   c. Water-Based Primer for Transition Membrane: Aquatec Primer.
   d. Solvent-Based Primer for Transition Membrane: Blueskin Adhesive.
   e. Solvent-based Aerosol Primer for Transition Membrane: Blueskin Spray Prep.
   f. Counterflashing for Masonry Through Wall Flashing: Blueskin TWF.

g. Mastics, Adhesives and Tapes: Henry 570-05 Polybitume.

5. Protective Coatings Technology, Inc.
   a. Poly-Wall Air Lik Flex at 8-10 mils thick (dry).
   b. Water Based Primer: As recommended by manufacturer.
   c. Solvent-Based Primer: Poly-Wall AirLok or AirLok Flex as recommended.
   d. Counterflashing for Masonry Through –Wall Flashings. Poly-Wall CrackGuard.
   e. Mastics, Adhesives and Tapes: As recommended by manufactuer.
6. W.R.Meadows, Inc.
   a. Fluid Applied Air and Vapor Barrier: Air-Shield LM and Air-Shield LM All Season (for cold temperature applications), 60 mils (wet), 45 mills (dry).
   b. Detailing Strips: Air-Shield Self-Adhering Air Barrier.
   c. Water-Based Primer: Mel-Prim WB.
   d. Solvent –Based Primer: Mel-Prime VOC and Mel-Prime NE.
   e. Counterflashing for Masonry Through Wall Flashings: Air-Shield Thru-Wall Flashing.
   f. Mastics, Adhesives and Tapes: Pointing Mastic.
   g.

2.3 ACCESSORIES

A. General: Furnish primers, transition and flashing strips, mastics, sealants, glass fabric scrim tape and other accessory materials recommended by air-barrier manufacturer to produce a complete air-barrier assembly.

PART 3 - EXECUTION

3.1 INSTALLATION

A. Examination of substrates, areas, and conditions under which air and vapor barrier assemblies will be applied, with installer present, for compliance with requirements.
   1. Ensure that the following conditions are met:
      a. Surfaces are sound, dry, even and free of oil, grease, dirt, excess mortar or other contaminants.
      b. Concrete surfaces are cured and dry, smooth without large voids, spalled areas or sharp protrusions.
      c. Masonry are flush and completely filled with mortar, and all excess mortar sitting on masonry ties has been removed.
   2. Verify substrate is surface dry. Test for capillary moisture by plastic sheet method according to ASTM D 4263 and take suitable measures until substrate passes moisture test. Surface dry is an acceptable substrate condition if acceptable to the manufacturer.
   3. Verify Sealants used in the sheathing are compatible with membrane proposed for use, Perform field peel-adhesion test on materials to which sealant are adhered.

B. Joint Treatment: Prepare and fill joints and cracks in substrate according to ASTM C 1193 and air-barrier manufacturer's written instructions.

   1. Concrete and Masonry: Remove dust and dirt from joints and cracks complying with ASTM D 4258 before coating surfaces. Prime substrate and apply a single thickness of

air-barrier manufacturer's recommended preparation coat extending a minimum of 3 inches (75 mm) along each side of joints and cracks. Apply a double thickness of fluid air-barrier material and embed a joint reinforcing strip in preparation coat.

2. Gypsum Sheathing: Apply first layer of fluid air-barrier membrane at joints. Tape joints with joint reinforcing strip after first layer is dry. Apply a second layer of fluid air-barrier membrane over joint reinforcing strip.

C. Install transition strips and auxiliary materials according to air-barrier manufacturer's written instructions to form a seal with adjacent construction and maintain a continuous air barrier. Install transition strips so that a minimum of 3 inches (75 mm) of coverage is achieved over both substrates.

D. Fill gaps in perimeter frame surfaces of windows, curtain walls, storefronts, and doors, and miscellaneous penetrations of air-barrier membrane with foam sealant.

E. Apply primer to substrates at required rate and allow it to dry. Limit priming to areas that will be covered by air-barrier membrane in same day. Re-prime areas exposed for more than 24 hours.

F. Apply air-barrier membrane to form a seal with termination strips and to achieve a continuous air barrier according to air-barrier manufacturer's written instructions.

G. Apply under normal working conditions above 45 degrees F and rising. Do not apply when rain is imminent.

H. Apply with brush or spray equipment. Soft brushes free from stiff bristles should be used and the material applied in even strokes. When spraying, apply in one coat with a 50% overlap of the spray pattern to obtain a uniform and continuous coating, carrying coating and around joints, grooves, and slots, following reveals and soffits of window’s, and continuing12 inches out on adjoining partitions and soffits as instructed by the manufacturer.

I. Ensure continuous coating free of breaks, voids and pinholes.

J. Thoroughly cover all cracks, joints and corners.

K. Provide fluid applied air and vapor barrier and transition strips in all exterior cavity walls on concrete masonry units, and on all exterior sheathing including, but not limited to, areas above soffits, doors and windows and behind stucco and plaster.

L. Connect air and vapor barrier in exterior wall assembly **continuously** to the air barrier of the roof, to concrete below grade structures, to windows, curtain wall, storefront, louvers, exterior doors and other intersection conditions and perform sealing of penetrations.

M. At changes in substrate plane, provide transition material (bead of sealant, mastic, extruded silicone sealant, membrane counterflashing or other material recommended by manufacturer) under membrane to eliminate all sharp 90 degree inside corners and to make smooth transition from one plane to another.

N. At deflection and control joints, provide backup for the membrane to accommodate anticipated movement.

O. Inspect installation prior to enclosing assembly and repair punctures, damaged areas and inadequately lapped seams with a patch of membrane lapped as recommended by manufacturer.

P. Cooperate with owner's testing agency and ABAA auditors. If evidence of moisture penetration is discovered, apply an additional coat of approved fluid applied air and vapor barrier and/or transition strips to exterior surface, repeating application and testing (at no additional cost to the Owner) until no evidence of moisture penetration is found.

END OF SECTION 072726

SECTION 078413 - PENETRATION FIRESTOPPING

PART 1 - GENERAL

1.1 SECTION REQUIREMENTS

A. Submittals: Product Data and Installer certificates signed by Installer certifying that products have been installed in compliance with requirements.

PART 2 - PRODUCTS

2.1 PENETRATION FIRESTOPPING

A. Manufacturers: **One of the following:**

1. A/D Fire Protection Systems Inc.
2. Grace Construction Products.
3. Hilti, Inc.
4. Johns Manville.
5. Nelson Firestop Products.
6. NUCO Inc.
7. Passive Fire Protection Partners.
8. RectorSeal Corporation.
9. Specified Technologies Inc.
10. 3M Fire Protection Products.
11. Tremco, Inc.; Tremco Fire Protection Systems Group.
12. USG Corporation.

B. Provide penetration firestopping materials that are compatible with one another, substrates, and penetrating items if any.

C. Penetrations in Fire-Resistance-Rated Walls and Horizontal Assemblies: Provide penetration firestopping with ratings determined per ASTM E 814 or UL 1479, based on testing at a positive pressure differential of 0.01-inch wg (2.49 Pa).

1. F-Rating at Fire-Resistance-Rated Walls: Not less than that of construction penetrated.
2. F-Rating at Horizontal Assemblies: At least 1 hour, but not less than that of construction penetrated.
3. T-Rating at Horizontal Assemblies: At least 1 hour, but not less than the fire-resistance rating of construction penetrated except for penetrations within the cavity of a wall.

D. Penetrations in Smoke Barriers: Provide penetration firestopping with ratings determined per UL 1479.

1. L-Rating: Not exceeding 5.0 cfm/sq. ft. (0.025 cu. m/s per sq. m) of penetration opening at 0.30-inch wg (74.7 Pa) at both ambient and elevated temperatures.

E. Exposed Penetration Firestopping: Provide products with flame-spread and smoke-developed indexes of less than 25 and 450, respectively, as determined per ASTM E 84.

F. Accessories: Provide components for each penetration firestopping system that are needed to install fill materials and to maintain ratings required. Use only those components specified by penetration firestopping manufacturer and approved by qualified testing and inspecting agency.

PART 3 - EXECUTION

3.1 INSTALLATION

A. General: Install penetration firestopping to comply with manufacturer's written installation instructions and published drawings for products and applications indicated.

B. Identify penetration firestopping with preprinted metal or plastic labels. Attach labels permanently to surfaces adjacent to and within 6 inches (150 mm) of firestopping edge so labels will be visible to anyone seeking to remove penetrating items or firestopping. Include the following information on labels:

1. The words "Warning - Penetration Firestopping - Do Not Disturb. Notify Building Management of Any Damage."
2. Designation of applicable testing and inspecting agency.
3. Manufacturer's name.
4. Installer's name.

C. Owner will engage a qualified testing agency to perform tests and inspections.

END OF SECTION 078413

SECTION 079200 - JOINT SEALANTS

PART 1 - GENERAL

1.1 SECTION REQUIREMENTS

A. Submittals: Product Data and color Samples.

B. Environmental Limitations: Do not proceed with installation of joint sealants when ambient and substrate temperature conditions are outside limits permitted by joint-sealant manufacturer or are below 40 deg F (4.4 deg C).

PART 2 - PRODUCTS

2.1 JOINT SEALANTS

A. Low-Emitting Materials: Sealants shall comply with the following limits for VOC content:

1. Architectural Sealants: 250 g/L.
2. Nonmembrane Roof Sealants: 300 g/L.
3. Single-Ply Roof Membrane Sealants: 450 g/L.
4. Other Sealants: 420 g/L.
5. Sealant Primers for Nonporous Substrates: 250 g/L.
6. Sealant Primers for Porous Substrates: 775 g/L.
7. Modified Bituminous Sealant Primers: 500 g/L.
8. Other Sealant Primers: 750 g/L.

B. Low-Emitting Materials:

1. Exterior reactive sealants shall have a VOC content of not more than 50 g/L or 4 percent by weight, whichever is greater.
2. Other exterior caulks and sealants shall have a VOC content of not more than 30 g/L or 2 percent by weight, whichever is greater.
3. Interior sealants shall comply with the testing and product requirements of the California Department of Health Services' "Standard Practice for the Testing of Volatile Organic Emissions from Various Sources Using Small-Scale Environmental Chambers."

C. Compatibility: Provide joint sealants, joint fillers, and other related materials that are compatible with one another and with joint substrates under service and application conditions.

D. Sealant for General Exterior Use Where Another Type Is Not Specified[**, One of the Following**]:

1. Single-component, nonsag polysulfide sealant, ASTM C 920, Type S; Grade NS; Class 25; for Use NT.

   a. Products: One of the following:

      1) Pacific Polymers International, Inc.; Elastoseal 230 Type I.
      2) **W. R. Meadows, Inc.;** Deck-O-Seal One Step.

2. Single-component, neutral-curing silicone sealant, ASTM C 920, Type S; Grade NS; Class 25; for Use NT.

   a. Products: **One of the following:**

      1) Dow Corning Corporation; 799.
      2) GE Advanced Materials Silicones; [**UltraGlaze SSG4000**] [**UltraGlaze SSG4000AC**].
      3) May National Associates, Inc.; [**Bondaflex Sil 200 GPN**] [**Bondaflex Sil 201 FC**].
      4) Polymeric Systems, Inc.; PSI-631.
      5) Schnee-Morehead, Inc.; SM5731 Poly-Glaze Plus.
      6) Tremco Incorporated; [**Proglaze SSG**] [**Tremsil 600**].

3. Single-component, nonsag urethane sealant, ASTM C 920, Type S; Grade NS; Class 25; and for Use NT.

   a. Products: **One of the following:**

      1) BASF Building Systems; [**Sonolastic NP1**] [**Sonalastic TX1**] [**Sonolastic Ultra**].
      2) Bostik, Inc.; Chem-Calk [**900**] [**915**] [**916 Textured**].
      3) May National Associates, Inc.; [**Bondaflex PUR 25**] [**Bondaflex PUR 25 Textured**] [**Bondaflex PUR 40 FC**].
      4) Pacific Polymers International, Inc.; Elasto-Thane 230 Type II.
      5) Pecora Corporation; Dynatrol I-XL.
      6) Polymeric Systems, Inc.; Flexiprene 1000.
      7) Schnee-Morehead, Inc.; [**Permathane SM7100**] [**Permathane SM7108**] [**Permathane SM7110**].
      8) Sika Corporation, Construction Products Division; Sikaflex - 1a.
      9) Tremco Incorporated; [**Dymonic**] [**Vulkem 116**].

E. Sealant for Use in Interior Joints in Ceramic Tile and Other Hard Surfaces in Kitchens and **Toilet Rooms** and **Around Plumbing Fixtures**:

1. Single-component, mildew-resistant silicone sealant, ASTM C 920, Type S; Grade NS; Class 25; for Use NT; formulated with fungicide.

   a. Products: **One of the following:**

1) BASF Building Systems; Omniplus.
2) Dow Corning Corporation; 786 Mildew Resistant.
3) GE Advanced Materials - Silicones; Sanitary SCS1700.
4) May National Associates, Inc.; Bondaflex Sil 100 WF.
5) Pecora Corporation; 898.
6) Tremco Incorporated; Tremsil 200 Sanitary.

F. Sealant for Interior Use at Perimeters of Door and Window Frames:

1. Acrylic latex or siliconized acrylic latex, ASTM C 834, Type OP, Grade NF.

a. Products: **One of the following:**

1) BASF Building Systems; Sonolac.
2) Bostik, Inc.; Chem-Calk 600.
3) May National Associates, Inc.; **Bondaflex 600**
4) Pecora Corporation; AC-20+.
5) Schnee-Morehead, Inc.; SM 8200.
6) Tremco Incorporated; Tremflex 834.

G. Acoustical Sealant:

1. Nonsag, paintable, nonstaining latex sealant complying with ASTM C 834 that effectively reduces airborne sound transmission as demonstrated by testing according to ASTM E 90.

a. Products:[**One of the following:**]

1) Pecora Corporation; **AIS-919**.
2) USG Corporation; SHEETROCK Acoustical Sealant.

2.2 MISCELLANEOUS MATERIALS

A. Provide sealant backings of material that are nonstaining; are compatible with joint substrates, sealants, primers, and other joint fillers; and are approved for applications indicated by sealant manufacturer based on field experience and laboratory testing.

B. Cylindrical Sealant Backings: ASTM C 1330, of size and density to control sealant depth and otherwise contribute to producing optimum sealant performance.

C. Bond-Breaker Tape: Polyethylene tape or other plastic tape recommended by sealant manufacturer for preventing sealant from adhering to rigid, inflexible joint-filler materials or joint surfaces at back of joint. Provide self-adhesive tape where applicable.

D. Primer: Material recommended by joint-sealant manufacturer where required for adhesion of sealant to joint substrates indicated, as determined from preconstruction joint-sealant-substrate tests and field tests.

PART 3 - EXECUTION

3.1 INSTALLATION

A. Comply with ASTM C 1193.

B. Install sealant backings to support sealants during application and to produce cross-sectional shapes and depths of installed sealants that allow optimum sealant movement capability.

C. Install bond-breaker tape behind sealants where sealant backings are not used between sealants and backs of joints.

D. Acoustical Sealant Installation: At sound-rated assemblies and elsewhere as indicated, seal perimeters, control joints, openings, and penetrations with a continuous bead of acoustical sealant. Install acoustical sealant at both faces of partitions. Comply with ASTM C 919.

END OF SECTION 079200

SECTION 081113 - HOLLOW METAL DOORS AND FRAMES

PART 1 - GENERAL

1.1 SECTION REQUIREMENTS

A. Submittals: Product Data and Shop Drawings.

PART 2 - PRODUCTS

2.1 HOLLOW METAL DOORS AND FRAMES

A. Manufacturers: **One of the following:**

1. Amweld Building Products, LLC.
2. Benchmark; a division of Therma-Tru Corporation.
3. Ceco Door Products; an Assa Abloy Group company.
4. Curries Company; an Assa Abloy Group company.
5. Deansteel Manufacturing Company, Inc.
6. Firedoor Corporation.
7. Fleming Door Products Ltd.; an Assa Abloy Group company.
8. Habersham Metal Products Company.
9. Karpen Steel Custom Doors & Frames.
10. Kewanee Corporation (The).
11. Mesker Door Inc.
12. Pioneer Industries, Inc.
13. Security Metal Products Corp.
14. Steelcraft; an Ingersoll-Rand company.
15. Windsor Republic Doors.

B. Doors: Complying with SDI A250.8 for level and model and SDI A250.4 for physical-endurance level indicated, 1-3/4 inches (44 mm) thick unless otherwise indicated.

1. Interior Doors: **Level 1 and Physical Performance Level C (Standard Duty)** metal face.
2. Exterior Doors: **Level 2 and Physical Performance Level B (Heavy Duty), Model 2 (Seamless),** metallic-coated steel sheet faces.

    a. Thermal-Rated (Insulated) Doors: Where indicated, provide doors with thermal-resistance value (R-value) of not less than [**2.1 deg F x h x sq. ft./Btu (0.370 K x sq. m/W)**] R-13 when tested according to ASTM C 1363.

3. Hardware Reinforcement: Fabricate according to SDI A250.6 with reinforcement plates from same material as door face sheets.

C. Frames: ANSI A250.8; conceal fastenings unless otherwise indicated.

1. Steel Sheet for Interior Frames: **0.042-inch-** **(1.0-mm-)** minimum thickness.
2. Interior Frame Construction: **Full profile welded**..
3. Steel Sheet for Exterior Frames: **0.067-inch-** **(1.7-mm-)**] minimum thickness**, metallic coated**.
4. Exterior Frame Construction: **Full profile welded**.
5. Hardware Reinforcement: Fabricate according to ANSI/SDI A250.6 with reinforcement plates from same material as frames.
6. Frame Anchors: Not less than 0.042 inch (1.0 mm) thick.

D. Door Louvers: **Sight**, **Light** proof per SDI 111C.

E. Door Silencers: Three on strike jambs of single-door frames and two on heads of double-door frames.

F. Grout Guards: Provide where mortar might obstruct hardware operation.

G. Prepare doors and frames to receive mortised and concealed hardware according to SDI A250.6 and BHMA A156.115.

H. Reinforce doors and frames to receive surface-applied hardware.

I. Prime Finish: Manufacturer's standard, factory-applied coat of lead- and chromate-free primer complying with SDI A250.10 acceptance criteria.

2.2 MATERIALS

A. Cold-Rolled Steel Sheet: ASTM A 1008/A 1008M, suitable for exposed applications.

B. Hot-Rolled Steel Sheet: ASTM A 1011/A 1011M, free of scale, pitting, or surface defects.

C. Metallic-Coated Steel Sheet: ASTM A 653/A 653M, G60 (Z180 or)A60 (ZF180).

D. Frame Anchors: ASTM A 879/A 879M, 4Z (12G) coating designation; mill phosphatized.

1. For anchors built into exterior walls, sheet steel complying with ASTM A 1008/A 1008M or ASTM A 1011/A 1011M, hot-dip galvanized according to ASTM A 153/A 153M, Class B.

E. Inserts, Bolts, and Fasteners: Hot-dip galvanized according to ASTM A 153/A 153M.

PART 3 - EXECUTION

3.1 INSTALLATION

A. Install hollow metal frames to comply with SDI A250.11.

B. Install doors to provide clearances between doors and frames as indicated in SDI A250.11.

C. Prime-Coat Touchup: Immediately after erection, sand smooth rusted or damaged areas of prime coat and apply touchup of compatible air-drying rust-inhibitive primer. **Use galvanizing repair paint for metallic coated surfaces.**

END OF SECTION 081113

SECTION 081416 – PLASTIC LAMINATE FACED WOOD DOORS

PART 1 - GENERAL

1.1 SECTION REQUIREMENTS

A. Submittals: Samples for **plastic-laminate-faced** doors.

B. Warranty: Provide a written warranty for the work specified for lifetime replacing, including cost of rehanging and refinishing, at no cost to owner, doors exhibiting defects in materials or workmanship including warp in excess of ¼ inch as defined by AWI, warp or twist to a degree that door will not operate properly, delamination of face and telegraphing or show through of stiles, rails, or core greater than 0.01 inch in any 3 inch area.

PART 2 - PRODUCTS

2.1 Manufacturers: One of the following with a minimum of 5 years experience manufacturing products meeting or exceeding the guidelines

A. Algoma Hardwoods, Inc.

B. Ampco, Inc.

C. Buell Door Company Inc.

D. Chappell Door Co.

E. Eagle Plywood & Door Manufacturing, Inc.

F. Eggers Industries.

G. Graham; an Assa Abloy Group company.

H. Haley Brothers, Inc.

I. Ideal Architectural Doors & Plywood.

J. Ipik Door Company.

K. Lambton Doors.

L. Marlite.

M. Marshfield Door Systems, Inc.

N. Mohawk Flush Doors, Inc.; a Masonite company.

O. Oshkosh Architectural Door Company.

P. Poncraft Door Company.

Q. Vancouver Door Company.

R. VT Industries Inc.

2.2 DOOR CONSTRUCTION, GENERAL

A. Quality Standard: WDMA I.S.1-A.

B. Fire-Rated Wood Doors: Labeled by a testing and inspecting agency acceptable to authorities having jurisdiction based on testing at positive pressure according to NFPA 252 or UL 10C. Reference construction document drawings for locations and rating.

C. Low-Emitting Materials: Provide doors made with adhesives and composite wood products that do not contain urea formaldehyde.

D. WDMA I.S.1-A Performance Grade:
1. Standard Duty: **Closets (not including janitor's closets) Private toilets**.

E. Particleboard-Core Doors: Provide **blocking in particleboard cores or provide** structural composite lumber cores instead of particleboard cores for doors with [**exit devices**] [**or**] **protection plates**..

F. Fire-Protection-Rated Doors: Provide core specified or mineral core as needed to provide fire-protection rating indicated. Provide the following for mineral-core doors:

1. Composite blocking where required to eliminate through-bolting hardware.
2. Laminated-edge construction.
3. Formed-steel edges and astragals for pairs of doors.

2.3 PLASTIC LAMINATE FACED WOOD DOORS (See Door Schedule on Drawings)

A. Materials
1. The 1-3/4 inch flush interior non rated wood door shall be made up of 3-ply AWI PC-HPDL-3 High Pressure Decorative Laminate (HPDL), bonded 32 lb per cubic foot particle core, bonded 1 -3/8 inch stile and 1-1/8 inch min rails abrasively planed as an assembly prior to laminating ,factory machine fit. Structural lumber cores are required at doors with more than 40 percent of door removed due to light or vent cutouts or doors with exit devices.
2. Flush interior fire rated wood doors shall meet the above requirements and shall be scheduled to be fire-rated, receiving the appropriate label, with a 20 minute rated core.
3. Doors indicated to have closures shall contain a 7 inch top rail blocking, 5 inch bottom-rail blocking in doors indicating armor kick plates, and 5 inch mid-rail and corner blocking in doors indicated to have exit devices.

B. Accessories

1. Glazing shall be factory applied and shall be compatible with positive pressure requirements.
2. Glass stops, where needed, shall be metal type painted to match door frame. Stops prepared for countersink require tamper proof screws.
3. Adhesive shall be type 1, hot pressed.
4. The top, bottom and cut surface of openings shall be sealed at the factory with two coats of varnish.
5. Exposed vertical edges – plastic laminate that matches factory face laminate.

2.4 LOUVERS AND LIGHT FRAMES

A. Louvers: **Clear-anodized aluminum louvers**.

2.5 FABRICATION AND FINISHING

A. Factory fit doors to suit frame-opening sizes indicated and to comply with clearances specified.

B. Factory machine doors for hardware that is not surface applied. Locate hardware to comply with DHI-WDHS-3., hardware schedules, shop drawings, DHI A115-W series standards, and hardware templates.

C. Cut and trim openings to comply with referenced standards.
   1. Factory install louvers in prepared openings.

PART 3 - EXECUTION

3.1 INSTALLATION

A. Install doors to comply with manufacturer's written instructions and WDMA I.S.1-A, and as indicated.

   1. Install fire-rated doors to comply with NFPA 80.

   2. Coordinate work with door opening construction, and door and frame hardware installation.

B. Align **and fit** doors in frames with uniform clearances and bevels. **Machine doors for hardware. Seal cut surfaces after fitting and machining.**

C. Verify that frames comply with indicated requirements for type, size, location and swing characteristics and that the frames are installed plumb, level and parallel.

D. Clearances: As follows unless otherwise indicated:

   1. 1/8 inch (3.2 mm) at heads, jambs, and between pairs of doors.
   2. 1/2inch from bottom to sill, except 1/4 inch clearance from top of carpeting.
   3. 1/4 inch (6.4 mm) from bottom of door to top of threshold.- exterior doors.
   4. Comply with NFPA 80 for fire-rated doors.

E. Repair, refinish, or replace factory-finished doors damaged during installation, as directed by Architect.

F. Do not remove or paint over labels on labeled doors.

G. Protect doors from damage and replace door that are damaged. Verify that tops and bottoms of doors have been sealed prior to installation, as required for warranty.

END OF SECTION 081416

SECTION 084113 - ALUMINUM-FRAMED ENTRANCES AND STOREFRONTS

PART 1 - GENERAL

1.1 RELATED DOCUMENTS

A. Drawings and general provisions of the Contract, including General and Supplementary Conditions and Division 01 Specification Sections, apply to this Section.

1.2 SUMMARY

A. The Work required under this section is the complete design, fabrication, and installation of a new standard stick built storefront framing system, that shall be conventionally glazed, captured on all four sides, and erected on site.

B. Section Includes:
   1. Exterior storefront framing
   2. Interior storefront framing
   3. Exterior manual-swing entrance doors
   4. Interior manual-swing entrance doors

C. This is a Design/Build performance specification where Contractor assumes complete responsibility for the design, installation, and performance, of the completed exterior wall installation in meeting the performance standards identified herein and the Architect's aesthetic requirements as reflected in the Drawings. The Contractor also is responsible for ensuring that the design of its specific anchorage system for the Glazed Aluminum Storefront System will attach to the building's structural framing system without the anchorage system intruding into interior finished area. The Building Structural Engineer has designed the building structural system to accommodate the loads (dead and live loads) imposed upon it by the Glazed Aluminum Storefront System. Modifications (if any) to the building's structural system, as designed by the Building Structural Engineer, that are required to accommodate anchor locations particular to the Glazed Aluminum Storefront System's specific anchorage design are to be included in the Work for the Glazed Aluminum Storefront System.
   1. Drawings are diagrammatic and do not purport to identify nor solve problems of thermal or structural movement, glazing, anchorage or moisture disposal.
   2. Requirements shown by details are intended to establish basic dimension of unit, sight lines and profiles of members.
   3. Provide Storefront and door systems including their components, engineered by registered professional engineers, licensed to practice structural engineering in jurisdiction where Project is located. Coordinate work to provide continuous, exterior skin assembly, complying with specified performance requirements for air and water infiltration, including at intersections and transitions between adjacent systems.
   4. Provide concealed fastening for the storefront wall systems wherever possible.
   5. Coordinate shop drawings and installation of storefront and door systems to resolve conflicts.
   6. Allow for installation tolerances, thermal expansion and contraction of adjacent materials, and sealant manufacturer's recommended joint design.
   7. Storefront and door systems shall be free from rattles, wind whistles, and noise due to thermal and structural movement and wind pressure.
   8. Attachment considerations shall take into account site peculiarities and expansion and contraction movements to eliminate loosening, weakening, or fracturing of connections between units and building structure or between units themselves.
   9. Exclude glass, sealants, and interior finishes when determining framing member strength, stiffness, and lateral stability.
   10. Storefront systems shall drain to exterior face of wall at the specified performance pressures; water entering system and condensation occurring within system shall be conveyed to the exterior by drain holes and gutters of adequate size to evacuate water without infiltration to interior.
   11. Provide components exposed to view of uniform color and profile appearance.

1.3 DEFINNITIONS

A. Definitions: For fenestration industry standard terminology and definitions refer to American Architectural Manufacturers Association (AAMA) – AAMA Glossary (AAMA AG).

1.4 PREINSTALLATION MEETINGS

A. Pre-installation Conference: Conduct conference at Project site.

1.5 ACTION SUBMITTALS

A. Product Data: For each type of product.
   1. Include construction details, material descriptions, dimensions of individual components and profiles, and finishes.

B. Sustainable Documentation Submittals:
   1. Recycled Content:
      a. Product data and certification letter indicating percentages by weight of post-consumer and pre-consumer recycled content for products having recycled content.
      b. Include statement indicating costs for each product having recycled content.
   2. Regional Material:
      a. Product data for regional materials (within 500 miles of construction site) indicating location and distance from Project of material manufacturer and point of extraction, harvest, or recovery for each raw material.
      b. Include statement indicating cost for each regional material and the fraction by weight that is considered regional.
      c. For metal products, provide statement from manufacturer indicating location for scrap collection and other recycled materials include in the product and its distance from the project site.
   3. VOC content data. Provide for any adhesives, sealants, paints, or coatings used on the interior of the building.
      a. Product information or statement from manufacturer indicating the VOC content of the product in grams per liter (g/L).

C. Shop Drawings: For aluminum-framed entrances and storefronts. Include project specific plans, elevations, sections, full-size details, and attachments to other work.
   1. Include details of provisions for assembly expansion and contraction and for draining moisture occurring within the assembly to the exterior.
   2. Include full-size isometric details of each vertical-to-horizontal intersection of aluminum-framed entrances and storefronts, showing the following:
      a. Joinery, including concealed welds.
      b. Anchorage.
      c. Expansion provisions.
      d. Glazing.
      e. Flashing and drainage.
   3. Show connection to and continuity with adjacent thermal, weather, air, and vapor barriers.

D. Samples for Initial Selection: For units with factory-applied color finishes.

E. Fabrication Sample: Of each vertical-to-horizontal intersection of assemblies, made from 12-inch lengths of full-size components and showing details of the following:
   1. Joinery, including concealed welds.
   2. Anchorage.
   3. Expansion provisions.
   4. Glazing.
   5. Flashing and drainage.

F. Delegated-Design Submittal: For aluminum-framed entrances and storefronts indicated to comply with performance requirements and design criteria, including analysis data signed and sealed by the qualified professional engineer responsible for their preparation registered in the State of Texas.

1.6 INFORMATIONAL SUBMITTALS

A. Preconstruction Laboratory Mockup Testing Submittals:
   1. Testing Program: Developed specifically for Project.
   2. Test Reports: Prepared by a qualified preconstruction testing agency for each mockup test.
   3. Record Drawings: As-built drawings of preconstruction laboratory mockups showing changes made during preconstruction laboratory mockup testing.

B. Qualification Data: For Installer.

C. Energy Performance Certificates: For aluminum-framed entrances and storefronts, accessories, and components, from manufacturer.

1. Basis for Certification: NFRC-certified energy performance values for each aluminum-framed entrance and storefront.

D. Product Test Reports: For aluminum-framed entrances and storefronts, for tests performed by manufacturer and witnessed by a qualified testing agency.

E. Sample Warranties: For special warranties.

1.7 CLOSEOUT SUBMITTALS

A. Maintenance Data: For aluminum-framed entrances and storefronts to include in maintenance manuals.

1.8 QUALITY ASSURANCE

A. Installer Qualifications: An entity that employs installers and supervisors who are trained and approved by manufacturer.

B. Product Options: Information on Drawings and in Specifications establishes requirements for aesthetic effects and performance characteristics of assemblies. Aesthetic effects are indicated by dimensions, arrangements, alignment, and profiles of components and assemblies as they relate to sightlines, to one another, and to adjoining construction.

1. Do not change intended aesthetic effects, as judged solely by Architect, except with Architect's approval. If changes are proposed, submit comprehensive explanatory data to Architect for review.

1.9 MOCKUPS

A. Mockups: Build mockups to verify selections made under Sample submittals and to demonstrate aesthetic effects and set quality standards for fabrication and installation.

1. Build mockup of typical wall area as shown on Drawings or, if not shown on Drawings, as directed by Architect.
2. Testing shall be performed on mockups according to requirements in "Field Quality Control" Article.
3. Approval of mockups does not constitute approval of deviations from the Contract Documents contained in mockups unless Architect specifically approves such deviations in writing.
4. Subject to compliance with requirements, approved mockups may become part of the completed Work if undisturbed at time of Substantial Completion.

1.10 WARRANTY

A. Special Warranty: Manufacturer agrees to repair or replace components of aluminum-framed entrances and storefronts that do not comply with requirements or that fail in materials or workmanship within specified warranty period.

1. Failures include, but are not limited to, the following:
   a. Structural failures including, but not limited to, excessive deflection.
   b. Noise or vibration created by wind and thermal and structural movements.
   c. Deterioration of metals**,** metal finishes, and other materials beyond normal weathering.
   d. Water penetration through fixed glazing and framing areas.
   e. Failure of operating components.

2. Warranty Period: 10 years from date of Substantial Completion.

B. Special Finish Warranty: Standard form in which manufacturer agrees to repair finishes or replace aluminum that shows evidence of deterioration of factory-applied finishes within specified warranty period.

1. Deterioration includes, but is not limited to, the following:
   a. Color fading more than 5 Hunter units when tested according to ASTM D 2244.
   b. Chalking in excess of a No. 8 rating when tested according to ASTM D 4214.
   c. Cracking, checking, peeling, or failure of paint to adhere to bare metal.

2. Warranty Period: 20 years from date of Substantial Completion.

PART 2 - PRODUCTS

2.1 PERFORMANCE REQUIREMENTS

A. VOC Limits: any adhesives, sealants, paints, or coatings shall meet the VOC limits set by authorities with jurisdiction.

B. General Performance: Comply with requirements specified herein as determined by testing of glazed aluminum-framed entrances and storefronts representing those indicated for this Project without failure due to defective manufacture, fabrication, installation, or other defects in construction.

1. Aluminum-framed entrances and glazed aluminum storefronts shall withstand movements of supporting structure including, but not limited to, story drift, twist, column shortening, long-term creep, and deflection from uniformly distributed and concentrated live loads.
2. Failure also includes the following:
   a. Thermal stresses transferring to building structure.
   b. Glass breakage.
   c. Water infiltration.
   d. Noise or vibration created by wind and thermal and structural movements.
   e. Loosening or weakening of fasteners, attachments, and other components.
   f. Failure of operating units.
   g. Sealant failure.
   h. Damage to or failure of glazing, framing members, and/or structural connections.
   i. Deflection exceeding specified limits.

C. Delegated Design: Design glazed storefronts, including comprehensive engineering analysis by a qualified professional engineer, registered in the State of Texas, using performance requirements and design criteria indicated.

D. Structural Requirements: Provide storefront systems and components engineered by registered professional engineer licensed to practice structural engineering in jurisdiction where Project is located in accordance with the requirements listed below.

E. Structural Loads:

1. Wind Loads: As indicated on Structural Drawings.

F. Deflection of Framing Members: At design wind pressure, as follows:

1. Deflection Normal to Wall Plane: Limited to 1/175 of clear span for spans up to 13 feet 6 inches (4.1 m) and to 1/240 of clear span plus 1/4 inch (6.35 mm) for spans greater than 13 feet 6 inches (4.1 m) or an amount that restricts edge deflection of individual glazing lites to 3/4 inch (19.1 mm), whichever is less.
2. Deflection Parallel to Glazing Plane: Limited to L/360 of clear span or 1/8 inch, whichever is smaller.
3. Cantilever Deflection: Where framing members overhang an anchor point, limit deflection to two times the length of cantilevered member, divided by 175:
4. Main framing members shall have no permanent deformation in excess of 0.1 percent of their clear span
5. Member support points limited to 1/16” maximum deflection under the most critical loading conditions

G. Structural Test Performance: Test according to ASTM E 330 as follows:

1. When tested at positive and negative wind-load design pressures, assemblies do not evidence deflection exceeding specified limits.
2. When tested at 150 percent of positive and negative wind-load design pressures, assemblies, including anchorage, do not evidence material failures, structural distress, and permanent deformation of main framing members exceeding 0.2 percent of span.
3. Test Durations: As required by design wind velocity, but not less than **10** seconds.

H. Air Infiltration: Test according to ASTM E 283 for infiltration as follows:

1. Fixed Framing and Glass Area:
   a. Maximum air leakage of 0.06 cfm/sq. ft. (0.30 L/s per sq. m at a static-air-pressure differential of 6.24 lbf/sq. ft. (300 Pa).
2. Entrance Doors:
   a. Pair of Doors: Maximum air leakage of 1.0 cfm/sq. ft. (5.08 L/s per sq. m) at a static-air-pressure differential of 1.57 lbf/sq. ft. (75 Pa).
   b. Single Doors: Maximum air leakage of 0.5 cfm/sq. ft. at a static-air-pressure differential of 1.57 lbf/sq. ft..

I. Water Penetration under Static Pressure: Test according to ASTM E 331 as follows:

1. No evidence of water penetration through fixed glazing and framing areas when tested according to a minimum static-air-pressure differential of 20 percent of positive wind-load design pressure, but not less than 6.24 lbf/sq. ft. (300 Pa).

J. Water Penetration under Dynamic Pressure: Test according to AAMA 501.1 as follows:
1. No evidence of water penetration through fixed glazing and framing areas when tested at dynamic pressure equal to 20 percent of positive wind-load design pressure, but not less than 6.24 lbf/sq. ft. (300 Pa)
2. Maximum Water Leakage: No visible water beyond the interior-most plane of glazing. Water leakage does not include water controlled by flashing and gutters, or water that is drained to exterior.

K. Provision for Movement: Provide for expansion and contraction due to structural deflection, structural movement, and temperature changes. In addition, design the storefront system to meet the requirements provided below without detriment to appearance or performance

L. Interstory Drift: Accommodate design displacement of adjacent stories indicated.
1. Design Displacement: [As indicated on Drawings] <Insert design displacement>.
2. Test Performance: Complying with criteria for passing based on building occupancy type when tested according to AAMA 501.4 at design displacement and 1.5 times the design displacement].

M. Windborne-Debris Impact Resistance: Pass missile-impact and cyclic-pressure tests when tested according to ASTM E 1886 and testing information in ASTM E 1996 for [Wind Zone 1] [Wind Zone 2] [Wind Zone 3] [Wind Zone 4].
1. Large-Missile Test: For glazed openings located within 30 feet (9.1 m) of grade.

N. Thermal Movements: Allow for thermal movements resulting from the following maximum change (range) in ambient and surface temperatures:
1. Temperature Change (Range): 120 deg F (67 deg C), ambient; 180 deg F (100 deg C), material surfaces.
2. Test Interior Ambient-Ait Temperature: 75 deg F.
3. Test Performance: No buckling; stress on glass; sealant failure; excess stress on framing, anchors, and fasteners; or reduction of performance when tested according to AAMA 501.5.

O. Structural-Sealant Joints:
1. Designed to carry gravity loads of glazing.
2. Designed to produce tensile or shear stress of less than 20 psi.

P. Energy Performance: Glazed aluminum curtain walls shall have certified and labeled energy performance ratings in accordance with NFRC.
1. Thermal Transmittance (U-factor): When tested to AAMA Specification 1503, the thermal transmittance (U-factor) shall not be more than: 0.46 BTU/hr/ft2/°F per AAMA 507 or NFRC 100.
2. Condensation Resistance (CR): Fixed glazing and framing areas shall have an NFRC-certified condensation resistance rating of no less than 63 as determined according to NFRC 500.

2.2 EXTERIOR STOREFRONT FRAMING

A. Manufacturers: Subject to compliance with requirements, provide products by one of the following:
1. EFCO Corporation.
2. Kawneer North America; an Alcoa Company.
3. Oldcastle BuildingEnvelope.
4. YKK AP America Inc.
5. EFCO Corporation
6. Tubelite, Inc.

B. Basis of Design:
1. Kawneer, Trifab VersaGlaze 451T framing system

C. Source Limitations: Obtain all components of aluminum-framed entrance and storefront system, including framing and accessories, from single manufacturer.

D. Framing Members: Manufacturer's extruded- or formed-aluminum framing members of thickness required and reinforced as required to support imposed loads.
1. Construction: Thermally broken
2. Glazing System: Retained mechanically with gaskets on four sides, or as indicated on drawings.
3. Glazing: 1 inch insulated glass, or as indicated on door schedule and Master Schedule.
4. Glazing Plane: Front
5. Finish: High-performance organic finish.
6. Fabrication Method: Screw Spline
7. No exposed fasteners
8. Open back head and jamb members to have continuous fillers.

E. Backer Plates: Manufacturer's standard, continuous backer plates for framing members, if not integral, where framing abuts adjacent construction.
F. Brackets and Reinforcements: Manufacturer's standard high-strength aluminum with non-staining, nonferrous shims for aligning system components.
G. Materials:
1. Aluminum: Alloy and temper recommended by manufacturer for type of use and finish indicated.
a. Sheet and Plate: ASTM B 209 (ASTM B 209M).
b. Extruded Bars, Rods, Profiles, and Tubes: ASTM B 221.
c. Extruded Structural Pipe and Tubes: ASTM B 429/B 429M.
d. Structural Profiles: ASTM B 308/B 308M.
2. Steel Reinforcement: Manufacturer's standard zinc-rich, corrosion-resistant primer complying with SSPC-PS Guide No. 12.00; applied immediately after surface preparation and pretreatment. Select surface preparation methods according to recommendations in SSPC-SP COM, and prepare surfaces according to applicable SSPC standard.
a. Structural Shapes, Plates, and Bars: ASTM A 36/A 36M.
b. Cold-Rolled Sheet and Strip: ASTM A 1008/A 1008M.
c. Hot-Rolled Sheet and Strip: ASTM A 1011/A 1011M.

2.3 INTERIOR STOREFRONT FRAMING
A. Manufacturers: Subject to compliance with requirements, provide products by one of the following:
1. EFCO Corporation.
2. Kawneer North America; an Alcoa Company.
3. Oldcastle BuildingEnvelope.
4. YKK AP America Inc.
5. EFCO Corporation
6. Tubelite, Inc.
B. Basis of Design:
1. Kawneer Trifab VersaGlaze 450 framing system
2. Kawneer InFrame Interior framing system
C. Source Limitations: Obtain all components of aluminum-framed entrance and storefront system, including framing and accessories, from single manufacturer.
D. Framing Members: Manufacturer's extruded- or formed-aluminum framing members of thickness required and reinforced as required to support imposed loads.
1. Glazing Plane: Center
2. Finish: High-performance organic finish.
3. Fabrication Method: Screw Spline
4. No exposed fasteners
5. Open back head and jamb members to have continuous fillers.
E. Backer Plates: Manufacturer's standard, continuous backer plates for framing members, if not integral, where framing abuts adjacent construction.
F. Brackets and Reinforcements: Manufacturer's standard high-strength aluminum with non-staining, nonferrous shims for aligning system components.
G. Materials:
1. Aluminum: Alloy and temper recommended by manufacturer for type of use and finish indicated.
a. Sheet and Plate: ASTM B 209 (ASTM B 209M).
b. Extruded Bars, Rods, Profiles, and Tubes: ASTM B 221.
c. Extruded Structural Pipe and Tubes: ASTM B 429/B 429M.
d. Structural Profiles: ASTM B 308/B 308M.
2. Steel Reinforcement: Manufacturer's standard zinc-rich, corrosion-resistant primer complying with SSPC-PS Guide No. 12.00; applied immediately after surface preparation and pretreatment. Select surface preparation methods according to recommendations in SSPC-SP COM, and prepare surfaces according to applicable SSPC standard.
a. Structural Shapes, Plates, and Bars: ASTM A 36/A 36M.
b. Cold-Rolled Sheet and Strip: ASTM A 1008/A 1008M.
c. Hot-Rolled Sheet and Strip: ASTM A 1011/A 1011M.

2.4 EXTERIOR ENTRANCE DOOR SYSTEMS
A. Manufacturers: Subject to compliance with requirements, provide products by one of the following:
1. EFCO Corporation.

2. Kawneer North America; an Alcoa Company.
3. Oldcastle BuildingEnvelope.
4. YKK AP America Inc.
5. EFCO Corporation
6. Tubelite, Inc.

B. Entrance Doors: Manufacturer's standard glazed entrance doors for manual-swing operation.
1. Standard Entrances:
a. Medium Stile: Kawneer 350 (1 ¾ in. x 3 ½ in)
b. Wide Stile: Kawneer 500 (1 ¾ in. x 5 in)
2. Heavy Wall Entrances:
a. Medium Stile: Kawneer 350 Heavy Wall (2 in. x 3 ½ in)
b. Wide Stile: Kawneer 500 Heavy Wall (2 in. x 5 in)

C. Door Construction: Extruded-aluminum tubular rail and stile members. Mechanically fasten corners with reinforcing brackets that are deeply penetrated and fillet welded or that incorporate concealed tie rods.

D. Bottom Rail: ADA Compliant

E. Glazing: 1 inch clear tempered insulated glass, or as indicated on door schedule and Master Schedule.

F. Glazing Stops and Gaskets: Beveled , snap-on, extruded-aluminum stops and preformed gaskets.
1. Provide non-removable glazing stops on outside of door.

G. Finish: High performance organic finish.

2.5 INTERIOR ENTRANCE DOOR SYSTEMS

A. Manufacturers: Subject to compliance with requirements, provide products by one of the following:
1. EFCO Corporation.
2. Kawneer North America; an Alcoa Company.
3. Oldcastle BuildingEnvelope.
4. YKK AP America Inc.
5. EFCO Corporation
6. Tubelite, Inc.
7. Frameworks

B. Entrance Doors: Manufacturer's standard glazed entrance doors for manual-swing operation.
1. Standard Entrances: As indicated in the door type / schedule drawings.
a. Medium Stile: Raco Series 400 (1 ¾ in. x 3 ½ in)
b. Wide Stile: Raco Series 550 (1 ¾ in. x 5 in)

C. Door Construction: Extruded-aluminum tubular rail and stile members. Mechanically fasten corners with reinforcing brackets that are deeply penetrated and fillet welded or that incorporate concealed tie rods.

D. Bottom Rail: ADA Compliant

E. Glazing: 1/4 inch minimum clear tempered glass, or as indicated on door schedule and Master Schedule.

F. Glazing Stops and Gaskets: Beveled , snap-on, extruded-aluminum stops and preformed gaskets.

G. Finish: High performance organic finish.

2.6 ENTRANCE DOOR HARDWARE

A. Entrance Door Hardware: Hardware not specified in this Section is specified in Section 087100 "Door Hardware."

B. General: Provide entrance door hardware and entrance door hardware sets indicated in "Entrance Door Hardware Sets" Article for each entrance door to comply with requirements in this Section.
1. Entrance Door Hardware Sets: Provide quantity, item, size, finish or color indicated, and products complying with BHMA standard referenced.
2. Sequence of Operation: Provide electrified door hardware function, sequence of operation, and interface with other building control systems indicated.
3. Opening-Force Requirements:
a. Egress Doors: Not more than 15 lbf (67 N) to release the latch and not more than 30 lbf (133 N) to set the door in motion and not more than 15 lbf (67 N) to open the door to its minimum required width.
b. Accessible Interior Doors: Not more than 5 lbf to fully open door.

C. Designations: Requirements for design, grade, function, finish, size, and other distinctive qualities of each type of entrance door hardware are indicated in "Entrance Door Hardware Sets" Article. Products are identified by using entrance door hardware designations as follows:
1. References to BHMA Standards: Provide products complying with these standards and requirements for description, quality, and function.

D. Thresholds: BHMA A156.21, raised thresholds beveled with a slope of not more than 1:2, with maximum height of 1/2 inch.

2.7 GLAZING

A. Glazing: Comply with Section 088000 "Glazing."
B. Glazing Gaskets: Manufacturer's standard sealed-corner pressure-glazing system of black, resilient elastomeric glazing gaskets, setting blocks, and shims or spacers.
C. Glazing Sealants: As recommended by manufacturer
D. Weatherseal Sealants: ASTM C 920 for Type S; Grade NS; Class 25; Uses NT, G, A, and O; chemically curing silicone formulation that is compatible with structural sealant and other system components with which it comes in contact; recommended by structural-sealant, weatherseal-sealant, and structural-sealant-glazed storefront manufacturers for this use.
    1. Color: Match structural sealant.

2.8 ACCESSORIES

A. Fasteners and Accessories: Manufacturer's standard corrosion-resistant, non-staining, nonbleeding fasteners and accessories compatible with adjacent materials.
    1. Use self-locking devices where fasteners are subject to loosening or turning out from thermal and structural movements, wind loads, or vibration.
    2. Reinforce members as required to receive fastener threads.
    3. Use exposed fasteners with countersunk Phillips screw heads, finished to match framing system.
B. Anchors: Three-way adjustable anchors with minimum adjustment of 1 inch that accommodate fabrication and installation tolerances in material and finish compatible with adjoining materials and recommended by manufacturer.
    1. Concrete and Masonry Inserts: Hot-dip galvanized cast-iron, malleable-iron, or steel inserts complying with ASTM A 123/A 123M or ASTM A 153/A 153M requirements.
C. Concealed Flashing: Dead-soft, 0.018-inch- thick stainless steel, ASTM A 240/A 240M of type recommended by manufacturer.
D. Bituminous Paint: Cold-applied asphalt-mastic paint complying with SSPC-Paint 12 requirements except containing no asbestos, formulated for 30-mil thickness per coat.

2.9 FABRICATION

A. Form or extrude aluminum shapes before finishing.
B. Weld in concealed locations to greatest extent possible to minimize distortion or discoloration of finish. Remove weld spatter and welding oxides from exposed surfaces by descaling or grinding.
C. Fabricate components that, when assembled, have the following characteristics:
    1. Profiles that are sharp, straight, and free of defects or deformations.
    2. Accurately fitted joints with ends coped or mitered.
    3. Physical and thermal isolation of glazing from framing members.
    4. Accommodations for thermal and mechanical movements of glazing and framing to maintain required glazing edge clearances.
    5. Provisions for field replacement of glazing from interior for vision glass and exterior for spandrel glazing or metal panels.
    6. Fasteners, anchors, and connection devices that are concealed from view to greatest extent possible.
D. Mechanically Glazed Framing Members: Fabricate for flush glazing without projecting stops.
E. Structural-Sealant-Glazed Framing Members: Include accommodations for using temporary support device to retain glazing in place while structural sealant cures.
F. Storefront Framing: Fabricate components for assembly using screw-spline system
G. Entrance Door Frames: Reinforce as required to support loads imposed by door operation and for installing entrance door hardware.

    1. At exterior doors, provide compression weather stripping at fixed stops.
    2. At interior doors, provide silencers at stops to prevent metal-to-metal contact. Install three silencers on strike jamb of single-door frames and two silencers on head of frames for pairs of doors.
H. Entrance Doors: Reinforce doors as required for installing entrance door hardware.
    1. At pairs of exterior doors, provide sliding-type weather stripping retained in adjustable strip and mortised into door edge.

2. At exterior doors, provide weather sweeps applied to door bottoms.

I. Entrance Door Hardware Installation: Factory install entrance door hardware to the greatest extent possible. Cut, drill, and tap for factory-installed entrance door hardware before applying finishes.

J. After fabrication, clearly mark components to identify their locations in Project according to Shop Drawings.

2.10 ALUMINUM FINISHES

A. Clear Anodic Finish: AAMA 611, AA-M12C22A41, Class I, 0.018 mm or thicker.

B. High-Performance Organic Finish: Two-coat fluoropolymer finish complying with AAMA 2605 and containing not less than 70 percent PVDF resin by weight in color coat. Prepare, pretreat, and apply coating to exposed metal surfaces to comply with coating and resin manufacturers' written instructions.

1. Color and Gloss: As selected my Architect from manufacturer’s full range of colors.

PART 3 - EXECUTION

3.1 EXAMINATION

A. Examine areas, with Installer present, for compliance with requirements for installation tolerances and other conditions affecting performance of the Work.

B. Proceed with installation only after unsatisfactory conditions have been corrected.

3.2 PREPARATION

A. Prepare surfaces that are in contact with structural sealant according to sealant manufacturer's written instructions to ensure compatibility and adhesion. Preparation includes, but is not limited to, cleaning and priming surfaces.

3.3 INSTALLATION

A. General:
1. Comply with manufacturer's written instructions.
2. Do not install damaged components.
3. Fit joints to produce hairline joints free of burrs and distortion.
4. Rigidly secure non-movement joints.
5. Install anchors with separators and isolators to prevent metal corrosion and electrolytic deterioration and to prevent impeding movement of moving joints.
6. Seal perimeter and other joints watertight unless otherwise indicated.
7. All materials to be installed by experienced craftsmen in accordance with manufacturer’s written specifications.
8. After installation, the Contractor shall protect all exposed aluminum surfaces from damage by grinding and polishing compounds, plaster, lime, acid, cement, or other contaminants. The Contractor shall be responsible for final cleaning

B. Metal Protection:
1. Where aluminum is in contact with dissimilar metals, protect against galvanic action by painting contact surfaces with materials recommended by manufacturer for this purpose or by installing nonconductive spacers.
2. Where aluminum is in contact with concrete or masonry, protect against corrosion by painting contact surfaces with bituminous paint.

C. Set continuous sill members and flashing in full sealant bed as specified in Section 079200 "Joint Sealants" to produce weathertight installation.

D. Install components plumb and true in alignment with established lines and grades.

E. Install operable units level and plumb, securely anchored, and without distortion. Adjust weather-stripping contact and hardware movement to produce proper operation.

F. Install glazing as specified in Section 088000 "Glazing."

G. Entrance Doors: Install doors to produce smooth operation and tight fit at contact points.
1. Exterior Doors: Install to produce weathertight enclosure and tight fit at weather stripping.

2. Field-Installed Entrance Door Hardware: Install surface-mounted entrance door hardware according to entrance door hardware manufacturers' written instructions using concealed fasteners to greatest extent possible.

3.4 ERECTION TOLERANCES

A. Erection Tolerances: Install aluminum-framed entrances and storefronts to comply with the following maximum tolerances:
   1. Plumb: 1/8 inch in 10 feet (3.2 mm in 3 m); 1/4 inch in 40 feet (6.35 mm in 12.2 m).
   2. Level: 1/8 inch in 20 feet; 1/4 inch in 40 feet.
   3. Alignment:
      a. Where surfaces abut in line or are separated by reveal or protruding element up to 1/2 inch (12.7 mm) wide, limit offset from true alignment to 1/16 inch (1.6 mm).
      b. Where surfaces are separated by reveal or protruding element from 1/2 to 1 inch wide, limit offset from true alignment to 1/8 inch.
      c. Where surfaces are separated by reveal or protruding element of 1 inch wide or more, limit offset from true alignment to 1/4 inch.
   4. Location: Limit variation from plane to 1/8 inch in 12 feet (3.2 mm in 3.6 m); 1/2 inch (12.7 mm) over total length.

3.5 FIELD QUALITY CONTROL

A. Testing Agency: Engage a qualified testing agency to perform tests and inspections.
B. Field Quality-Control Testing: Perform the following test on representative areas of aluminum-framed entrances and storefronts .
   1. Water-Spray Test: Before installation of interior finishes has begun, areas designated by Architect shall be tested according to [AAMA 501.2][ASTM E 1105] and shall not evidence water penetration.
      a. Perform a minimum of two tests in areas as directed by Architect.
      b. Perform tests in each test area as directed by Architect. Perform tests, prior to 50 percent completion .
C. Aluminum-framed entrances and storefronts will be considered defective if they do not pass tests and inspections.
D. Prepare test and inspection reports.

3.6 MAINTENANCE SERVICE

A. Entrance Door Hardware:
   1. Maintenance Tools and Instructions: Furnish a complete set of specialized tools and maintenance instructions as needed for Owner's continued adjustment, maintenance, and removal and replacement of entrance door hardware.
   2. Initial Maintenance Service: Beginning at Substantial Completion, provide **six** months' full maintenance by skilled employees of entrance door hardware Installer. Include quarterly preventive maintenance, repair or replacement of worn or defective components, lubrication, cleaning, and adjusting as required for proper entrance door hardware operation at rated speed and capacity. Use parts and supplies that are the same as those used in the manufacture and installation of original equipment.

3.7 ENTRANCE DOOR HARDWARE SETS

A. A. Refer to Section 087100 “Door Hardware”

END OF SECTION 084113

SECTION 085113 - ALUMINUM WINDOWS

PART 1 - GENERAL

1.1 RELATED DOCUMENTS

A. Drawings and general provisions of the Contract, including General and Supplementary Conditions and Division 01 Specification Sections, apply to this Section.

1.2 SUMMARY

A. Section includes aluminum windows for exterior locations.

1.3 PREINSTALLATION MEETINGS

A. Preinstallation Conference: Conduct conference at Project site.
   1. Review and finalize construction schedule and verify availability of materials, Installer's personnel, equipment, and facilities needed to make progress and avoid delays.
   2. Review and discuss the finishing of aluminum windows that is required to be coordinated with the finishing of other aluminum work for color and finish matching.
   3. Review, discuss, and coordinate the interrelationship of aluminum windows with other exterior wall components. Include provisions for anchorage, flashing, sealing perimeters, and protecting finishes.
   4. Review and discuss the sequence of work required to construct a watertight and weathertight exterior building envelope.
   5. Inspect and discuss the condition of substrate and other preparatory work performed by other trades.

1.4 ACTION SUBMITTALS

A. Product Data: For each type of product.
   1. Include construction details, material descriptions, glazing and fabrication methods, dimensions of individual components and profiles, hardware, and finishes for aluminum windows.
B. Shop Drawings: Include project specific plans, elevations, sections, hardware, accessories, insect screens, operational clearances, and details of installation, including anchor, flashing, and sealant installation.
C. Samples for Initial Selection: For units with factory-applied color finishes.
   1. Include similar Samples of hardware and accessories involving color selection.
D. Product Schedule: For aluminum windows. Use same designations indicated on Drawings.

1.5 INFORMATIONAL SUBMITTALS

A. Qualification Data: For manufacturer and Installer.
B. Product Test Reports: For each type of aluminum window, for tests performed by a qualified testing agency.
C. Field quality-control reports.
D. Sample Warranties: For manufacturer's warranties.

1.6 QUALITY ASSURANCE

A. Manufacturer Qualifications: A manufacturer capable of fabricating aluminum windows that meet or exceed performance requirements indicated and of documenting this performance by test reports, and calculations.
B. Installer Qualifications: An installer acceptable to aluminum window manufacturer for installation of units required for this Project.
C. Mockups: Build mockups to verify selections made under Sample submittals and to demonstrate aesthetic effects and set quality standards for materials and execution.
   1. Build mockup of typical wall area as shown on Drawings, or otherwise as directed by Architect.
   2. Approval of mockups does not constitute approval of deviations from the Contract Documents contained in mockups unless Architect specifically approves such deviations in writing.

1.7 WARRANTY

A. Manufacturer's Warranty: Manufacturer agrees to repair or replace aluminum windows that fail in materials or workmanship within specified warranty period.
   1. Failures include, but are not limited to, the following:
      a. Failure to meet performance requirements.

b. Structural failures including excessive deflection, water leakage, condensation, and air infiltration.
c. Faulty operation of movable sash and hardware.
d. Deterioration of materials and finishes beyond normal weathering.
e. Failure of insulating glass.

2. Warranty Period:
a. Window: 10 years from date of Substantial Completion.
b. Glazing Units: Five years from date of Substantial Completion.
c. Aluminum Finish: 10 years from date of Substantial Completion.

PART 2 - PRODUCTS

2.1 PRODUCTS, GENERAL

A. VOC Limits: any adhesives, sealants, paints, or coatings shall meet the VOC limits indicated in Section 018113.

2.2 MANUFACTURERS

A. Manufacturers: Subject to compliance with requirements, provide products by one of the following:
1. Boyd Aluminum Manufacturing.
2. Custom Window Company.
3. EFCO Corporation; a Pella company.
4. Kawneer North America; an Alcoa company.
5. TRACO.
6. Wausau Window and Wall Systems.
7. YKK AP America Inc.

B. Source Limitations: Obtain aluminum windows from single source from single manufacturer.

2.3 WINDOW PERFORMANCE REQUIREMENTS

A. Product Standard: Comply with AAMA/WDMA/CSA 101/I.S.2/A440 for definitions and minimum standards of performance, materials, components, accessories, and fabrication unless more stringent requirements are indicated.
1. Window Certification: AMMA certified with label attached to each window.

B. Performance Class and Grade: AAMA/WDMA/CSA 101/I.S.2/A440 as follows:
1. Minimum Performance Class: CW.
2. Minimum Performance Grade: 40 .

C. Thermal Transmittance: NFRC 100 maximum whole-window U-factor of 0.40 Btu/sq. ft. x h x deg F.

D. Solar Heat-Gain Coefficient (SHGC): NFRC 200 maximum whole-window SHGC of 0.25.

E. Condensation-Resistance Factor (CRF): Provide aluminum windows tested for thermal performance according to AAMA 1503, showing a CRF of 52.

F. Thermal Movements: Provide aluminum windows, including anchorage, that allow for thermal movements resulting from the following maximum change (range) in ambient and surface temperatures by preventing buckling, opening of joints, overstressing of components, failure of joint sealants, failure of connections, and other detrimental effects. Base engineering calculation on surface temperatures of materials due to both solar heat gain and nighttime-sky heat loss.
1. Temperature Change: 120 deg F (67 deg C), ambient; 180 deg F (100 deg C) material surfaces.

G. Sound Transmission Class (STC): Rated for not less than 30 STC when tested for laboratory sound transmission loss according to ASTM E 90 and determined by ASTM E 413.

H. Structural Loads:
1. Wind Loads: As indicated on Structural Drawings.

2.4 ALUMINUM WINDOWS

A. Operating Types: Provide the following operating types in locations indicated on Drawings:
1. Fixed.

B. Frames and Sashes: Aluminum extrusions complying with AAMA/WDMA/CSA 101/I.S.2/A440.
1. Thermally Improved Construction: Fabricate frames, sashes, and muntins with an integral, concealed, low-conductance thermal barrier located between exterior materials and window members exposed on interior side in a manner that eliminates direct metal-to-metal contact.

C. Glass: Clear annealed glass, ASTM C 1036, Type 1, Class 1, q3.
1. Kind: Fully tempered where required by code.

D. Insulating-Glass Units: ASTM E 2190[, certified through IGCC as complying with requirements of IGCC].
1. Glass: ASTM C 1036, Type 1, Class 1, q3.
a. Tint: Clear.

E. Fasteners: Noncorrosive and compatible with window members, trim, hardware, anchors, and other components.
   1. Exposed Fasteners: Do not use exposed fasteners to the greatest extent possible. For application of hardware, use fasteners that match finish hardware being fastened.

2.5 ACCESSORIES
A. Horizontal Louver Blinds: Provide manufacturer's standard, removable, horizontal louver blinds with aluminum slats and polyester fiber cords that are operated by hardware located on inside face of sash.
   1. Operation: Tilt, raising, and lowering.
   2. Color: As selected by Architect from manufacturer's full range.
B. Subsills: Thermally broken, extruded-aluminum subsills in configurations indicated on Drawings.
C. Interior Trim: Extruded-aluminum profiles in sizes and configurations indicated on Drawings.
D. Panning Trim: Extruded-aluminum profiles in sizes and configurations indicated on Drawings.
E. Receptor System: Two-piece, snap-together, thermally broken, extruded-aluminum receptor system that anchors windows in place.

2.6 FABRICATION
A. Fabricate aluminum windows in sizes indicated. Include a complete system for assembling components and anchoring windows.
B. Glaze aluminum windows in the factory.
C. Weep Holes: Provide weep holes and internal passages to conduct infiltrating water to exterior.
D. Provide water-shed members above side-hinged sashes and similar lines of natural water penetration.
E. Complete fabrication, assembly, finishing, hardware application, and other work in the factory to greatest extent possible. Disassemble components only as necessary for shipment and installation.

2.7 GENERAL FINISH REQUIREMENTS
A. Comply with NAAMM's "Metal Finishes Manual" for recommendations for applying and designating finishes.
B. Protect mechanical finishes on exposed surfaces from damage by applying a strippable, temporary protective covering before shipping.
C. Appearance of Finished Work: Variations in appearance of abutting or adjacent pieces are acceptable if they are within one-half of the range of approved Samples. Noticeable variations in the same piece are not acceptable. Variations in appearance of other components are acceptable if they are within the range of approved Samples and are assembled or installed to minimize contrast.

2.8 ALUMINUM FINISHES
A. Finish designations prefixed by AA comply with the system established by the Aluminum Association for designating aluminum finishes.
B. High-Performance Organic Finish (Two-Coat Fluoropolymer): AA-C12C40R1x (Chemical Finish: cleaned with inhibited chemicals; Chemical Finish: conversion coating; Organic Coating: manufacturer's standard two-coat, thermocured system consisting of specially formulated inhibitive primer and fluoropolymer color topcoat containing not less than 70 percent polyvinylidene fluoride resin by weight). Prepare, pretreat, and apply coating to exposed metal surfaces to comply with AAMA 2605 and with coating and resin manufacturers' written instructions.
   1. Color and Gloss: As selected by Architect from full range of industry colors and color densities.

PART 3 - EXECUTION

3.1 EXAMINATION
A. Examine openings, substrates, structural support, anchorage, and conditions, with Installer present, for compliance with requirements for installation tolerances and other conditions affecting performance of the Work.
B. Verify rough opening dimensions, levelness of sill plate, and operational clearances.
C. Examine wall flashings, vapor retarders, water and weather barriers, and other built-in components to ensure weathertight window installation.
D. Proceed with installation only after unsatisfactory conditions have been corrected.

3.2 INSTALLATION
A. Comply with manufacturer's written instructions for installing windows, hardware, accessories, and other components. For installation procedures and requirements not addressed in manufacturer's written instructions, comply with installation requirements in ASTM E 2112.

B. Install windows level, plumb, square, true to line, without distortion or impeding thermal movement, anchored securely in place to structural support, and in proper relation to wall flashing and other adjacent construction to produce weathertight construction.
C. Install windows and components to drain condensation, water penetrating joints, and moisture migrating within windows to the exterior.
D. Separate aluminum and other corrodible surfaces from sources of corrosion or electrolytic action at points of contact with other materials.

3.3 FIELD QUALITY CONTROL
A. Testing Agency: Engage a qualified testing agency to perform tests and inspections.
1. Testing and inspecting agency will interpret tests and state in each report whether tested work complies with or deviates from requirements.
B. Testing Services: Testing and inspecting of installed windows shall take place as follows:
1. Testing Methodology: Testing of windows for air infiltration and water resistance shall be performed in three locations per ASTM E1105.
2. Air-Infiltration Testing:
a. Test Pressure: That required to determine compliance with AAMA/WDMA/CSA 101/I.S.2/A440 performance class indicated.
b. Allowable Air-Leakage Rate: 1.5 times the applicable AAMA/WDMA/CSA 101/I.S.2/A440 rate for product type and performance class rounded down to one decimal place.
3. Water-Resistance Testing:
a. Test Pressure: Two-thirds times test pressure required to determine compliance with AAMA/WDMA/CSA 101/I.S.2/A440 performance grade indicated.
b. Allowable Water Infiltration: No water penetration.
4. Testing Extent: Three windows of each type as selected by Architect and a qualified independent testing and inspecting agency. Windows shall be tested after perimeter sealants have cured.
5. Test Reports: Prepared according to AAMA 502.
C. Remove and replace noncomplying windows and retest as specified above.
D. Additional testing and inspecting, at Contractor's expense, will be performed to determine compliance of replaced or additional work with specified requirements.
E. Prepare test and inspection reports.

3.4 ADJUSTING, CLEANING, AND PROTECTION
A. Clean exposed surfaces immediately after installing windows. Avoid damaging protective coatings and finishes. Remove excess sealants, glazing materials, dirt, and other substances.
1. Keep protective films and coverings in place until final cleaning.
B. Remove and replace glass that has been broken, chipped, cracked, abraded, or damaged during construction period.
C. Protect window surfaces from contact with contaminating substances resulting from construction operations. If contaminating substances do contact window surfaces, remove contaminants immediately according to manufacturer's written instructions.

END OF SECTION 085113

SECTION 087100 - DOOR HARDWARE

PART 1 - GENERAL

1.1 RELATED DOCUMENTS

A. Drawings and general provisions of the Contract, including General and Supplementary Conditions and Division 1 Specification Sections, apply to this Section.

1.2 SUMMARY

A. This Section includes commercial door hardware for the following:

1. Swinging doors.
2. Other doors to the extent indicated.

B. Door hardware includes, but is not necessarily limited to, the following:

1. Mechanical door hardware.
2. Cylinders specified for doors in other sections.

C. Related Sections:

1. Division 08 Section “Hollow Metal Doors and Frames”.
2. Division 08 Section “Blast Resistant Doors”.

D. Codes and References: Comply with the version year adopted by the Authority Having Jurisdiction.

1. ANSI A117.1 - Accessible and Usable Buildings and Facilities.
2. ICC/IBC - International Building Code.
3. NFPA 70 - National Electrical Code.
4. NFPA 80 - Fire Doors and Windows.
5. NFPA 101 - Life Safety Code.
6. NFPA 105 - Installation of Smoke Door Assemblies.
7. State Building Codes, Local Amendments.

E. Standards: All hardware specified herein shall comply with the following industry standards as applicable. Any undated reference to a standard shall be interpreted as referring to the latest edition of that standard:

1. ANSI/BHMA Certified Product Standards - A156 Series.
2. UL10C - Positive Pressure Fire Tests of Door Assemblies.
3. ANSI/UL 294 - Access Control System Units.

4. UL 305 - Panic Hardware.
5. ANSI/UL 437- Key Locks.

1.3 SUBMITTALS

A. Product Data: Manufacturer's product data sheets including installation details, material descriptions, dimensions of individual components and profiles, operational descriptions and finishes.

B. Door Hardware Schedule: Prepared by or under the supervision of supplier, detailing fabrication and assembly of door hardware, as well as procedures and diagrams. Coordinate the final Door Hardware Schedule with doors, frames, and related work to ensure proper size, thickness, hand, function, and finish of door hardware.

1. Format: Comply with scheduling sequence and vertical format in DHI's "Sequence and Format for the Hardware Schedule."

2. Organization: Organize the Door Hardware Schedule into door hardware sets indicating complete designations of every item required for each door or opening. Organize door hardware sets in same order as in the Door Hardware Sets at the end of Part 3. Submittals that do not follow the same format and order as the Door Hardware Sets will be rejected and subject to resubmission.

3. Content: Include the following information:

   a. Type, style, function, size, label, hand, and finish of each door hardware item.
   b. Manufacturer of each item.
   c. Fastenings and other pertinent information.
   d. Location of door hardware set, cross-referenced to Drawings, both on floor plans and in door and frame schedule.
   e. Explanation of abbreviations, symbols, and codes contained in schedule.
   f. Mounting locations for door hardware.
   g. Door and frame sizes and materials.
   h. Warranty information for each product.

4. Submittal Sequence: Submit the final Door Hardware Schedule at earliest possible date, particularly where approval of the Door Hardware Schedule must precede fabrication of other work that is critical in the Project construction schedule. Include Product Data, Samples, Shop Drawings of other work affected by door hardware, and other information essential to the coordinated review of the Door Hardware Schedule.

C. Keying Schedule: After a keying meeting with the owner has taken place prepare a separate keying schedule detailing final instructions. Submit the keying schedule in electronic format. Include keying system explanation, door numbers, key set symbols, hardware set numbers and special instructions. Owner must approve submitted keying schedule prior to the ordering of permanent cylinders/cores.

D. Informational Submittals:

1. Product Test Reports: Indicating compliance with cycle testing requirements, based on evaluation of comprehensive tests performed by manufacturer and witnessed by a qualified independent testing agency.

E. Operating and Maintenance Manuals: Provide manufacturers operating and maintenance manuals for each item comprising the complete door hardware installation in quantity as required in Division 01, Closeout Procedures.

1.4 QUALITY ASSURANCE

A. Manufacturers Qualifications: Engage qualified manufacturers with a minimum 5 years of documented experience in producing hardware and equipment similar to that indicated for this Project and that have a proven record of successful in-service performance.

B. Certified Products: Where specified, products must maintain a current listing in the Builders Hardware Manufacturers Association (BHMA) Certified Products Directory (CPD).

C. Installer Qualifications: A minimum 3 years documented experience installing both standard and electrified door hardware similar in material, design, and extent to that indicated for this Project and whose work has resulted in construction with a record of successful in-service performance.

D. Door Hardware Supplier Qualifications: Experienced commercial door hardware distributors with a minimum 5 years documented experience supplying both mechanical and electromechanical hardware installations comparable in material, design, and extent to that indicated for this Project. Supplier recognized as a factory direct distributor by the manufacturers of the primary materials with a warehousing facility in Project's vicinity. Supplier to have on staff a certified Architectural Hardware Consultant (AHC) available during the course of the Work to consult with Contractor, Architect, and Owner concerning both standard and electromechanical door hardware and keying.

E. Source Limitations: Obtain each type and variety of door hardware specified in this section from a single source unless otherwise indicated.

1. Electrified modifications or enhancements made to a source manufacturer's product line by a secondary or third party source will not be accepted.

F. Each unit to bear third party permanent label demonstrating compliance with the referenced standards.

G. Keying Conference: Conduct conference to comply with requirements in Division 01 Section "Project Meetings." Keying conference to incorporate the following criteria into the final keying schedule document:

1. Function of building, purpose of each area and degree of security required.
2. Plans for existing and future key system expansion.
3. Requirements for key control storage and software.
4. Installation of permanent keys, cylinder cores and software.
5. Address and requirements for delivery of keys.

H. Pre-Submittal Conference: Conduct coordination conference in compliance with requirements in Division 01 Section "Project Meetings" with attendance by representatives of Supplier(s), Installer(s), and Contractor(s) to review proper methods and the procedures for receiving, handling, and installing door hardware.

1. Prior to installation of door hardware, conduct a project specific training meeting to instruct the installing contractors' personnel on the proper installation and adjustment of their respective products. Product training to be attended by installers of door hardware (including electromechanical hardware) for aluminum, hollow metal and wood doors. Training will include the use of installation manuals, hardware schedules, templates and physical product samples as required.
2. Inspect and discuss electrical roughing-in, power supply connections, and other preparatory work performed by other trades.
3. Review sequence of operation narratives for each unique access controlled opening.
4. Review and finalize construction schedule and verify availability of materials.
5. Review the required inspecting, testing, commissioning, and demonstration procedures

I. At completion of installation, provide written documentation that components were applied to manufacturer's instructions and recommendations and according to approved schedule.

1.5 DELIVERY, STORAGE, AND HANDLING

A. Inventory door hardware on receipt and provide secure lock-up and shelving for door hardware delivered to Project site. Do not store electronic access control hardware, software or accessories at Project site without prior authorization.

B. Tag each item or package separately with identification related to the final Door Hardware Schedule, and include basic installation instructions with each item or package.

C. Deliver, as applicable, permanent keys, cylinders, cores, access control credentials, software and related accessories directly to Owner via registered mail or overnight package service. Instructions for delivery to the Owner shall be established at the "Keying Conference".

1.6 COORDINATION

A. Templates: Obtain and distribute to the parties involved templates for doors, frames, and other work specified to be factory prepared for installing standard and electrified hardware. Check Shop Drawings of other work to confirm that adequate provisions are made for locating and installing hardware to comply with indicated requirements.

B. Door and Frame Preparation: Doors and corresponding frames are to be prepared, reinforced and pre-wired (if applicable) to receive the installation of the specified electrified, monitoring, signaling and access control system hardware without additional in-field modifications.

1.7 WARRANTY

A. General Warranty: Reference Division 01, General Requirements. Special warranties specified in this Article shall not deprive Owner of other rights Owner may have under other provisions of the Contract Documents and shall be in addition to, and run concurrent with, other warranties made by Contractor under requirements of the Contract Documents.

B. Warranty Period: Written warranty, executed by manufacturer(s), agreeing to repair or replace components of standard and electrified door hardware that fails in materials or workmanship within specified warranty period after final acceptance by the Owner. Failures include, but are not limited to, the following:

1. Structural failures including excessive deflection, cracking, or breakage.
2. Faulty operation of the hardware.
3. Deterioration of metals, metal finishes, and other materials beyond normal weathering.
4. Electrical component defects and failures within the systems operation.

C. Standard Warranty Period: One year from date of Substantial Completion, unless otherwise indicated.

D. Special Warranty Periods:
1. Twenty five years for manual overhead door closer bodies.

1.8 MAINTENANCE SERVICE

A. Maintenance Tools and Instructions: Furnish a complete set of specialized tools and maintenance instructions as needed for Owner's continued adjustment, maintenance, and removal and replacement of door hardware.

PART 2 - PRODUCTS

2.1 SCHEDULED DOOR HARDWARE

A. General: Provide door hardware for each door to comply with requirements in Door Hardware Sets and each referenced section that products are to be supplied under.

B. Designations: Requirements for quantity, item, size, finish or color, grade, function, and other distinctive qualities of each type of door hardware are indicated in the Door Hardware Sets at the end of Part 3. Products are identified by using door hardware designations, as follows:

1. Named Manufacturer's Products: Product designation and manufacturer are listed for each door hardware type required for the purpose of establishing requirements. Manufacturers' names are abbreviated in the Door Hardware Schedule.

C. Substitutions: Requests for substitution and product approval for inclusive mechanical and electromechanical door hardware in compliance with the specifications must be submitted in writing and in accordance with the procedures and time frames outlined in Division 01,

Substitution Procedures. Approval of requests is at the discretion of the architect, owner, and their designated consultants.

2.2 HANGING DEVICES

A. Pin and Barrel Continuous Hinges: ANSI/BHMA A156.26 Grade 1-600 certified pin and barrel continuous hinges with minimum 14 gauge Type 304 stainless steel hinge leaves, concealed stainless pin, and twin self-lubricated nylon bearings at each knuckle separation. Factory trim hinges to suit door height and prepare for electrical cut-outs.

1. Manufacturers:

   a. Markar Products; ASSA ABLOY Architectural Door Accessories (MR).
   b. Pemko Products; ASSA ABLOY Architectural Door Accessories (PE).

2.3 CYLINDERS AND KEYING

A. General: Cylinder manufacturer to have minimum (10) years experience designing secured master key systems and have on record a published security keying system policy.

B. Source Limitations: Obtain each type of keyed cylinder and keys from the same source manufacturer as locksets and exit devices, unless otherwise indicated.

C. Cylinder Types: Original manufacturer cylinders able to supply the following cylinder formats and types:

1. Threaded mortise cylinders with rings and cams to suit hardware application.
2. Rim cylinders with back plate, flat-type vertical or horizontal tailpiece, and raised trim ring.
3. Bored or cylindrical lock cylinders with tailpieces as required to suit locks.
4. Tubular deadlocks and other auxiliary locks.
5. Mortise and rim cylinder collars to be solid and recessed to allow the cylinder face to be flush and be free spinning with matching finishes.
6. Keyway: Match Facility Restricted Keyway.

D. Removable Cores: Provide removable cores as specified, core insert, removable by use of a special key, and for use with only the core manufacturer's cylinder and door hardware.

E. Keying System: Each type of lock and cylinders to be factory keyed.

1. Supplier shall conduct a "Keying Conference" to define and document keying system instructions and requirements.
2. Furnish factory cut, nickel-silver large bow permanently inscribed with a visual key control number as directed by Owner.
3. Existing System: Field verify and key cylinders to match Owner's existing system.

F. Key Quantity: Provide the following minimum number of keys:

1. Change Keys per Cylinder: Two (2)
2. Master Keys (per Master Key Level/Group): Five (5).
3. Construction Keys (where required): Ten (10).

G. Construction Keying: Provide temporary keyed construction cores.

H. Key Registration List (Bitting List):

1. Provide keying transcript list to Owner's representative in the proper format for importing into key control software.
2. Provide transcript list in writing or electronic file as directed by the Owner.

2.4 MECHANICAL LOCKS AND LATCHING DEVICES

A. Multi-Point Locksets, Blast and Hurricane: ANSI/BHMA A156.37, Certified Products Directory (CPD) listed three-point deadbolt locking devices engineered for use on inswing and outswing door applications. Concealed, fortified steel construction shall secure the door to the frame at top, bottom, and center latching points. All three latching points shall be activated with one single motion when the device is closed for single motion egress. Devices shall come in mechanical and electro-mechanical functions as specified.

1. The locking system device shall be part of an integrated door, frame, and hardware assembly listed to the following standards:

   a. Blast 6.16 psi Category I / Hurricane 150 psf and 50 fps
   b. Blast 9.74 psi Category II / Hurricane 150 psf and 50 fps

2. ANSI-BHMA listed to A156.37 Grade 1 for multi-point locks:

   a. Lever torque to retract all bolts less than 28 in.lb.
   b. Cycle tested to 800,000 cycles.

3. UL10B or UL10C, 3-hour fire rated openings.

4. Latchbolt construction:

   a. Center Bolt: one piece, 3/4" throw anti-friction stainless steel latch and one piece, 1" throw, hardened stainless steel deadbolt; 2-3/4" backset standard.
   b. Top and Bottom Bolt: 3/4" x 3/4" square stainless steel latchbolt with 3/4" projection

5. Independent top and bottom bolt projection shall be field adjustable at the center mortise pocket, while the door is hung which does not require taking the door down to adjust.

6. Bottom strike shall be offset and reversible to accommodate alignment issues due to rough opening tolerances

7. Manufacturers:

a. Corbin Russwin Hardware (RU) - BL6600 Series.
b. Sargent Manufacturing (SA) - BL7300 Series.
c. No Substitution.

2.5 LOCK AND LATCH STRIKES

A. Strikes: Provide manufacturer's standard strike with strike box for each latch or lock bolt, with curved lip extended to protect frame, finished to match door hardware set, unless otherwise indicated, and as follows:

1. Flat-Lip Strikes: For locks with three-piece antifriction latchbolts, as recommended by manufacturer.
2. Extra-Long-Lip Strikes: For locks used on frames with applied wood casing trim.
3. Aluminum-Frame Strike Box: Provide manufacturer's special strike box fabricated for aluminum framing.
4. Double-lipped strikes: For locks at double acting doors. Furnish with retractable stop for rescue hardware applications.

B. Standards: Comply with the following:

1. Strikes for Mortise Locks and Latches: BHMA A156.13.
2. Strikes for Bored Locks and Latches: BHMA A156.2.
3. Strikes for Auxiliary Deadlocks: BHMA A156.36.
4. Dustproof Strikes: BHMA A156.16.

2.6 DOOR CLOSERS

A. All door closers specified herein shall meet or exceed the following criteria:

1. General: Door closers to be from one manufacturer, matching in design and style, with the same type door preparations and templates regardless of application or spring size. Closers to be non-handed with full sized covers.

2. Standards: Closers to comply with UL-10C for Positive Pressure Fire Test and be U.L. listed for use of fire rated doors.

3. Size of Units: Comply with manufacturer's written recommendations for sizing of door closers depending on size of door, exposure to weather, and anticipated frequency of use. Where closers are indicated for doors required to be accessible to the Americans with Disabilities Act, provide units complying with ANSI ICC/A117.1.

4. Closer Arms: Provide heavy duty, forged steel closer arms unless otherwise indicated in Hardware Sets.

5. Closers shall not be installed on exterior or corridor side of doors; where possible install closers on door for optimum aesthetics.

6. Closer Accessories: Provide door closer accessories including custom templates, special mounting brackets, spacers and drop plates as required for proper installation. Provide through-bolt and security type fasteners as specified in the hardware sets.

B. Door Closers, Surface Mounted (Large Body Cast Iron): ANSI/BHMA A156.4, Grade 1 Certified Products Directory (CPD) listed surface mounted, heavy duty door closers with complete spring power adjustment, sizes 1 thru 6; and fully operational adjustable according to door size, frequency of use, and opening force. Closers to be rack and pinion type, one piece cast iron body construction, with adjustable backcheck and separate non-critical valves for closing sweep and latch speed control.

1. Manufacturers:

a. Corbin Russwin Hardware (RU) - DC8000 Series.
b. Sargent Manufacturing (SA) - 281 Series.
c. No Substitution.

C. Door Closers, Surface Mounted (Heavy Duty): ANSI/BHMA A156.4, Grade 1 Certified Products Directory (CPD) listed surface mounted, heavy duty door closers with complete spring power adjustment, sizes 1 thru 6; and fully operational adjustable according to door size, frequency of use, and opening force. Closers to be rack and pinion type, one piece cast iron or aluminum alloy body construction, with adjustable backcheck and separate non-critical valves for closing sweep and latch speed control. Provide non-handed units standard.

1. Manufacturers:

a. Corbin Russwin Hardware (RU) - DC8000 Series.
b. Norton Door Controls (NO) - 7500 Series.
c. No Substitution.

2.7 ARCHITECTURAL TRIM

A. Door Protective Trim

1. General: Door protective trim units to be of type and design as specified below or in the Hardware Sets.

2. Size: Fabricate protection plates (kick, armor, or mop) not more than 2" less than door width (LDW) on stop side of single doors and 1” LDW on stop side of pairs of doors, and not more than 1" less than door width on pull side. Coordinate and provide proper width and height as required where conflicting hardware dictates. Height to be as specified in the Hardware Sets.

3. Where plates are applied to fire rated doors with the top of the plate more than 16” above the bottom of the door, provide plates complying with NFPA 80. Consult manufacturer’s catalog and template book for specific requirements for size and applications.

4. Protection Plates: ANSI/BHMA A156.6 certified protection plates (kick, armor, or mop), fabricated from the following:

a. Stainless Steel: 300 grade, 050-inch thick.

5. Options and fasteners: Provide manufacturer's designated fastener type as specified in the Hardware Sets. Provide countersunk screw holes.

6. Manufacturers:

a. Rockwood Products; ASSA ABLOY Architectural Door Accessories (RO).
b. Trimco (TC).

2.8 DOOR STOPS AND HOLDERS

A. General: Door stops and holders to be of type and design as specified below or in the Hardware Sets.

B. Door Stops and Bumpers: ANSI/BHMA A156.16, Grade 1 certified door stops and wall bumpers. Provide wall bumpers, either convex or concave types with anchorage as indicated, unless floor or other types of door stops are specified in Hardware Sets. Do not mount floor stops where they will impede traffic. Where floor or wall bumpers are not appropriate, provide overhead type stops and holders.

1. Manufacturers:

a. Rockwood Products; ASSA ABLOY Architectural Door Accessories (RO).
b. Trimco (TC).

2.9 ARCHITECTURAL SEALS

A. General: Thresholds, weatherstripping, and gasket seals to be of type and design as specified below or in the Hardware Sets. Provide continuous weatherstrip gasketing on exterior doors and provide smoke, light, or sound gasketing on interior doors where indicated. At exterior applications provide non-corrosive fasteners and elsewhere where indicated.

B. Smoke Labeled Gasketing: Assemblies complying with NFPA 105 that are listed and labeled by a testing and inspecting agency acceptable to authorities having jurisdiction, for smoke control ratings indicated, based on testing according to UL 1784.

1. Provide smoke labeled perimeter gasketing at all smoke labeled openings.

C. Fire Labeled Gasketing: Assemblies complying with NFPA 80 that are listed and labeled by a testing and inspecting agency acceptable to authorities having jurisdiction, for fire ratings indicated, based on testing according to UL-10C.

1. Provide intumescent seals as indicated to meet UL10C Standard for Positive Pressure Fire Tests of Door Assemblies, and NPFA 252, Standard Methods of Fire Tests of Door Assemblies.

D. Sound-Rated Gasketing: Assemblies that are listed and labeled by a testing and inspecting agency, for sound ratings indicated.

E. Replaceable Seal Strips: Provide only those units where resilient or flexible seal strips are easily replaceable and readily available from stocks maintained by manufacturer.

F. Manufacturers:

1. Pemko Products; ASSA ABLOY Architectural Door Accessories (PE).

2.10 FABRICATION

A. Fasteners: Provide door hardware manufactured to comply with published templates generally prepared for machine, wood, and sheet metal screws. Provide screws according to manufacturers recognized installation standards for application intended.

2.11 FINISHES

A. Standard: Designations used in the Hardware Sets and elsewhere indicate hardware finishes complying with ANSI/BHMA A156.18, including coordination with traditional U.S. finishes indicated by certain manufacturers for their products.

B. Provide quality of finish, including thickness of plating or coating (if any), composition, hardness, and other qualities complying with manufacturer's standards, but in no case less than specified by referenced standards for the applicable units of hardware

C. Protect mechanical finishes on exposed surfaces from damage by applying a strippable, temporary protective covering before shipping.

PART 3 - EXECUTION

3.1 EXAMINATION

A. Examine scheduled openings, with Installer present, for compliance with requirements for installation tolerances, labeled fire door assembly construction, wall and floor construction, and other conditions affecting performance.

B. Notify architect of any discrepancies or conflicts between the door schedule, door types, drawings and scheduled hardware. Proceed only after such discrepancies or conflicts have been resolved in writing.

3.2 PREPARATION

A. Hollow Metal Doors and Frames: Comply with ANSI/DHI A115 series.

B. Wood Doors: Comply with ANSI/DHI A115-W series.

3.3 INSTALLATION

A. Install each item of mechanical and electromechanical hardware and access control equipment to comply with manufacturer's written instructions and according to specifications.

1. Installers are to be trained and certified by the manufacturer on the proper installation and adjustment of fire, life safety, and security products including: hanging devices; locking devices; closing devices; and seals.

B. Mounting Heights: Mount door hardware units at heights indicated in following applicable publications, unless specifically indicated or required to comply with governing regulations:

1. Standard Steel Doors and Frames: DHI's "Recommended Locations for Architectural Hardware for Standard Steel Doors and Frames."
2. Wood Doors: DHI WDHS.3, "Recommended Locations for Architectural Hardware for Wood Flush Doors."
3. Where indicated to comply with accessibility requirements, comply with ANSI A117.1 "Accessibility Guidelines for Buildings and Facilities."
4. Provide blocking in drywall partitions where wall stops or other wall mounted hardware is located.

C. Retrofitting: Install door hardware to comply with manufacturer's published templates and written instructions. Where cutting and fitting are required to install door hardware onto or into surfaces that are later to be painted or finished in another way, coordinate removal, storage, and reinstallation of surface protective trim units with finishing work specified in Division 9 Sections. Do not install surface-mounted items until finishes have been completed on substrates involved.

D. Thresholds: Set thresholds for exterior and acoustical doors in full bed of sealant complying with requirements specified in Division 7 Section "Joint Sealants."

E. Storage: Provide a secure lock up for hardware delivered to the project but not yet installed. Control the handling and installation of hardware items so that the completion of the work will not be delayed by hardware losses before and after installation.

3.4 FIELD QUALITY CONTROL

A. Field Inspection (Punch Report): Reference Division 01 Sections “Closeout Procedures”. Produce project punch report for each installed door opening indicating compliance with approved submittals and verification hardware is properly installed, operating and adjusted. Include list of items to be completed and corrected, indicating the reasons or deficiencies causing the Work to be incomplete or rejected.

1. Organization of List: Include separate Door Opening and Deficiencies and Corrective Action Lists organized by Mark, Opening Remarks and Comments, and related Opening Images and Video Recordings.

2. Submit documentation of incomplete items in the following formats:

   a. PDF electronic file.
   b. Electronic formatted file integrated with the Openings Studio™ door opening management software platform.

3.5 ADJUSTING

A. Initial Adjustment: Adjust and check each operating item of door hardware and each door to ensure proper operation or function of every unit. Replace units that cannot be adjusted to operate as intended. Adjust door control devices to compensate for final operation of heating and ventilating equipment and to comply with referenced accessibility requirements.

3.6 CLEANING AND PROTECTION

A. Protect all hardware stored on construction site in a covered and dry place. Protect exposed hardware installed on doors during the construction phase. Install any and all hardware at the latest possible time frame.

B. Clean adjacent surfaces soiled by door hardware installation.

C. Clean operating items as necessary to restore proper finish. Provide final protection and maintain conditions that ensure door hardware is without damage or deterioration at time of owner occupancy.

3.7 DEMONSTRATION

A. Instruct Owner's maintenance personnel to adjust, operate, and maintain mechanical and electromechanical door hardware.

3.8 DOOR HARDWARE SETS

A. The hardware sets represent the design intent and direction of the owner and architect. They are a guideline only and should not be considered a detailed hardware schedule. Discrepancies, conflicting hardware and missing items should be brought to the attention of the architect with corrections made prior to the bidding process. Omitted items not included in a hardware set should be scheduled with the appropriate additional hardware required for proper application and functionality.

   1. Quantities listed are for each pair of doors, or for each single door.

   2. The supplier is responsible for handing and sizing all products.

   3. Where multiple options for a piece of hardware are given in a single line item, the supplier shall provide the appropriate application for the opening.

4. At existing openings with new hardware the supplier shall field inspect existing conditions prior to the submittal stage to verify the specified hardware will work as required. Provide alternate solutions and proposals as needed.

B. Manufacturer's Abbreviations:

1. MR - Markar
2. SA - SARGENT
3. RO - Rockwood
4. PE - Pemko
5. OT - Other

Hardware Sets

Set: 1.0
Doors: A101A, A102, A103, A104, A105, A105B
Description: Single - Blast Resistant - Exterior - Storeroom Lock - Closer

1	Continuous Hinge	HG305 7'0 TB	PC-1	MR	087100
1	Multi-Point Lock	LC FM7324 LL	US32D	SA	087100
1	Cylinder	As Required x Temp Core	US32D	SA	087100
1	Permanent Core	Match facility Standard	US15	SA	087100
1	Surface Closer	281 CPS	EN	SA	087100
1	Kick Plate	K1050 = 34" x 10" LDW CSK BEV	US32D	RO	087100
1	Threshold	2715AK		PE	087100
1	Gasketing	305CN TKSP		PE	087100
1	Rain Guard	346C x Frame Width		PE	087100
1	Sweep	3452APK		PE	087100

Notes: CONTINUOUS HINGE REQUIRES A CONTINUOUS HINGE REINFORCEMENT IN DOOR AND FRAME.

Blast resistant door hardware to be reviewed and confirmed by doot manufacturer. Basis of design is curries blast resistant openings.

Set: 2.0
Doors: A101, A101B, A102A, A103A, A104A
Description: OH Sectional Doors / OH Coiling Doors / Counter Shutters

1	Cylinder	As Required x Temp Core	US32D	SA	087100
1	Permanent Core	Match facility Standard	US15	SA	087100
1	All Hardware	By the door manufacturer		OT	

END OF SECTION 087100

SECTION 092216 - NON-STRUCTURAL METAL FRAMING

PART 1 - GENERAL

1.1 SECTION REQUIREMENTS

A. Submittals: Product Data.

PART 2 - PRODUCTS

2.1 PERFORMANCE REQUIREMENTS

A. Fire-Resistance-Rated Assemblies: Provide materials and construction identical to those tested in assemblies per ASTM E 119 by an independent testing and inspecting agency acceptable to authorities having jurisdiction.

B. STC-Rated Assemblies: Provide materials and construction identical to those tested in assemblies per ASTM E 90 and classified per ASTM E 413 by a qualified independent testing and inspecting agency.

2.2 METAL FRAMING AND SUPPORTS

A. Steel Framing Members, General: ASTM C 754.

1. Steel Sheet Components: ASTM C 645. Thickness specified is minimum uncoated base-metal thickness.
2. Protective Coating:[**Coating with equivalent corrosion resistance of ASTM A 653/A 653M, G40 (Z120)**] zinc coating.

B. Framing Systems:

1. Studs and Runners: In depth indicated and [**0.027 inch (0.68 mm)**] thick unless otherwise indicated.
2. Flat Strap and Backing: [**0.027 inch (0.68 mm)**] thick.
3. Hat-Shaped, Rigid Furring Channels: In depth indicated and [**0.018 inch (0.45 mm)**] thick.
4. Resilient Furring Channels: 1/2 inch (13 mm) deep, with single- or double-leg configuration.
5. Cold-Rolled Furring Channels: 0.053 inch (1.34 mm) thick, 3/4 inch (19 mm) deep.
6. Z-Furring: In depth required by insulation, 1-1/4-inch (32-mm) face flange, 7/8-inch (22-mm) wall-attachment flange, and 0.018 inch (0.45 mm) thick.

C. Suspension Systems:

1. Tie Wire: ASTM A 641/A 641M, Class 1 zinc coating, soft temper, 0.062-inch (1.59-mm) diameter, or double strand of 0.048-inch- (1.21-mm-) diameter wire.

2. Wire Hangers: ASTM A 641/A 641M, Class 1 zinc coating, soft temper, and 0.162-inch (4.12-mm) diameter.
3. Carrying Channels: Cold-rolled steel, 0.053 inch (1.34 mm) thick, [**2 inches (51 mm)**] deep.
4. Furring Channels: [**3/4-inch- (19-mm-) deep, cold-rolled channels, 0.053 inch (1.34 mm) thick**] [**Steel studs, 0.027 inch (0.68 mm) thick, in depth indicated**] [**Steel, rigid hat-shaped channels; 7/8 inch (22 mm) deep, 0.018 inch (0.45 mm) thick**] [**Steel,[Resilient furring channels, 1/2 inch (13 mm) deep, with single- or double-leg configuration**].
5. Grid Suspension System for Gypsum Board Ceilings: Interlocking, direct-hung system.

    a. Products:[**One of the following:**]

        1) Armstrong World Industries, Inc.; Drywall Grid Systems.
        2) Chicago Metallic Corporation; Drywall Grid System.
        3) USG Corporation; Drywall Suspension System.

2.3 ACCESSORIES

A. General: Comply with referenced installation standards.

1. Fasteners for Metal Framing: Of type, material, size, corrosion resistance, holding power, and other properties required to fasten steel members to substrates.

B. Isolation Strip at Exterior Walls: [**Asphalt felt**] [**or**] [**foam gasket**].

PART 3 - EXECUTION

3.1 INSTALLATION

A. Install steel framing to comply with ASTM C 754."

1. Gypsum Plaster Assemblies: Also comply with ASTM C 841.
2. Portland Cement Plaster Assemblies: Also comply with ASTM C 1063.
3. Gypsum Veneer Plaster Assemblies: Also comply with ASTM C 844.
4. Gypsum Board Assemblies: Also comply with ASTM C 840.

B. Install supplementary framing, and blocking to support fixtures, equipment services, heavy trim, grab bars, toilet accessories, furnishings, or similar construction.

C. Isolate steel framing from building structure, except at floor, to prevent transfer of loading imposed by structural movement.

1. Where studs are installed directly against exterior walls, install isolation strip between studs and wall.

D. Fire-Resistance-Rated Assemblies: Comply with requirements of listed assemblies.

E. Install suspension systems level to within [**1/8 inch in 12 feet (3 mm in 3.6 m)**] **<Insert dimensions>**.

END OF SECTION 092216

SECTION 092900 - GYPSUM BOARD

PART 1 - GENERAL

1.1 SECTION REQUIREMENTS

A. Submittals: Product Data.

B. Warranty: Provide a warranty for the work specified for one year against becoming unserviceable or causing an objectionable appearance resulting from either defective or nonconforming materials or workmanship.
   1. Tile backer board warranty against manufacturing defects for 20 years.

PART 2 - PRODUCTS

2.1 PERFORMANCE REQUIREMENTS

A. Fire-Resistance-Rated Assemblies: Provide materials and construction identical to those tested in assemblies per ASTM E 119 by an independent testing and inspecting agency acceptable to authorities having jurisdiction.

B. STC-Rated Assemblies: Provide materials and construction identical to those tested in assemblies per ASTM E 90 and classified per ASTM E 413 by a qualified independent testing and inspecting agency.

2.2 PANEL PRODUCTS

A. Provide in maximum lengths available to minimize end-to-end butt joints.

B. Interior Gypsum Board: ASTM C 1396/C 1396M, in thickness indicated, with manufacturer's standard edges. Regular type unless otherwise indicated, Type X where indicated, Sag-resistant type for ceiling surfaces.

   1. Manufacturers: One of the following:

      a. American Gypsum.
      b. CertainTeed Corp.
      c. Georgia-Pacific Gypsum LLC.
      d. Lafarge North America Inc.
      e. National Gypsum Company.
      f. Temple-Inland.
      g. USG Corporation.

C. Exterior Gypsum Soffit Board: ASTM C 1396/C 1396M, in thickness indicated, with manufacturer's standard edges. Regular type unless otherwise indicated.

1. Manufacturers: One of the following:

   a. American Gypsum.
   b. CertainTeed Corp.
   c. Georgia-Pacific Gypsum LLC.
   d. Lafarge North America Inc.
   e. National Gypsum Company.
   f. Temple-Inland.
   g. USG Corporation.

D. Glass-Mat, Water-Resistant Gypsum Backing Board: ASTM C 1178/C 1178M, of thickness indicated. Regular type unless otherwise indicated.

1. Products: **One of the following:**

   a. CertainTeed Corp.; GlasRoc Tile Backer.
   b. Georgia-Pacific Gypsum LLC; DensShield Tile Backer.

2.3 ACCESSORIES

A. Trim Accessories: ASTM C 1047, Corner and J- Beads formed from 28 gauge galvanized steel sheet.

1. Provide cornerbead at outside corners unless otherwise indicated.
2. Provide LC-bead (J-bead) at exposed panel edges.
3. Provide control joints where indicated. Control joints shall be metal with 1/4 inch open joint and perforated flanges for floating in place.

B. Joint-Treatment Materials: ASTM C 475/C 475M.

1. Joint Tape: Glass-fiber Mesh Tape shall be a minimum of 2 inch wide self adhering glass-fiber type with 10 x 10 threads per inch.
2. Joint Compounds: Setting-type taping compound and drying-type, ready-mixed, compounds for topping, as recommended by manufacturer. Perlite and other additives not permitted
3. Skim Coat: For final coat of Level 5 finish, use setting-type, sand able topping compound or drying-type, all-purpose compound. Perlite and other additives not permitted.

C. Screws
1. Shall be 1 inch and 1 5/8 inch long self- drilling, self -tapping cadmium plated bugle head type.

D. Laminating Adhesive: Adhesive or joint compound recommended for directly adhering gypsum panels to continuous substrate.

1. Adhesive shall have a VOC content of 50 g/L or less.

E. Acoustical Sealant for Exposed and Concealed Joints: Nonsag, paintable, nonstaining latex sealant complying with ASTM C 834.

1. Sealants shall have a VOC content of 250 g/L or less.

F. Sound-Attenuation Blankets: ASTM C 665, Type I (unfaced).

PART 3 - EXECUTION

3.1 INSTALLATION

A. Install gypsum board to comply with ASTM C 840.

1. Isolate gypsum board assemblies from abutting structural and masonry work. Provide edge trim and acoustical sealant.
2. Single-Layer Fastening Methods: Fasten gypsum panels to supports with screws.
3. Multilayer Fastening Methods: Fasten base layers and face layer separately to supports with screws.
4. Apply all ceiling boards first, cut boards so that they slip easily into place, butt all joints loosely, and place tapered or wrapped edges next to one another.
5. Select the maximum practical length to minimize end joints. All joints shall be neatly fitted and staggered. Joints on opposite sides of partition shall be so arranged as to occur on different studs.
6. Wherever possible, apply boards perpendicular to framing and in lengths that will span ceilings and walls without creating end (butt) joints. If butt joints do occur, stagger and locate them as far from the center of walls as possible.
7. Support all ends and edges of gypsum board on framing, except long edges at right angles to framing and where end joints are to be floated between frame members and back-blocked.
8. Install metal corner bead at external corners. Where length of the corner does not exceed standard stock lengths, use a single length.
9. Install gypsum board 1/2 inch above surface of slab to prevent wicking of moisture.
10. Install metal trim where indicated.
11. To insure level surfaces at joints, arrange board application so that the leading edge of each board is attached to the open or unsupported edge of a steel stud flange.
12. The leading edge of gypsum board shall not be attached to the web edge of a flange.
13. Fasten wallboard at 12 inches on center except at the edges/ joints which shall be at 8 inches on center.
14. Position edge-grip clips on the back of the panels and drive prongs into panel edges. Space clips 16 inches on center. Screw-attach clip to framing, furring or wall surface.

15. Apply at least two coats of joint compound over beads, screw heads and trim, and each coat shall be feathered out onto panel faces. Float out and sand joint to bake joints invisible when painted with non-texture paint.
16. Caulk around pipes, ducts, structure or similar items which penetrate drywall systems.
17. Provide acoustical sealant at walls in accordance with the manufacturer's instructions.
18. Control joints shall be located 30 feet-0 inches on center maximum and along building expansion joints, unless noted otherwise. Locations shall be reviewed prior to placement.

B. Moisture Resistant Tile Backer Board Installation
1. Install tile backer on walls vertically or horizontally.
2. Install tile backer on walls in accordance with manufacturer and TCA, method W245.
3. Substrate for tile: Apply glass mesh joint tape over joints. Embed tape in setting material specified for tile finishes. Allow joints to dry prior to installing tile systems.

C. Ceiling Board Installation
1. Apply gypsum ceiling board of maximum length with the long dimension at right angles to the furring channel and fastened with one inch drywall screws spaced 12 inches on center in the field of the board and 8 inches on center at the edges and along butting ends.
2. Align abutting end or edge joints over the web surface of the furring channel. Tie neatly and accurately with end joints staggered.
3. Install gypsum board ceiling panels in drywall suspension system.

D. Fire-Resistance-Rated Assemblies: Comply with requirements of listed assemblies.

E. Finishing Gypsum Board: ASTM C 840.

1. At concealed areas, unless a higher level of finish is required for fire-resistance-rated assemblies, provide Level 1 finish: Embed tape at joints.
2. At substrates for tile, provide Level 2 finish: Embed tape and apply separate first coat of joint compound to tape, fasteners, and trim flanges.
3. Unless otherwise indicated, provide Level 4 finish: Embed tape and apply separate first, fill, and finish coats of joint compound to tape, fasteners, and trim flanges.

F. Glass-Mat, Water-Resistant Backing Panels: Finish according to manufacturer's written instructions.

G. Workmanship Tolerances
1. Correct any nicks, bumps, out of level or out of plumb areas detectable to the naked eye.
2. Walls: 3/8" maximum deviation from vertical.
3. Bumps in Boards: maxim of 1/8 inch in 24 inches.
4. Corners: Maximum out of square 1/8 inch in 16 inches.
5. Float solid between corner beads less than 36 inches apart. Surfaces that appear concave are not acceptable.
6. Provide "J" mold and continuous 1/4 inch reveal wherever gypsum board directly abuts other material or when end is exposed.
7. Float Control joints flush with the wall surface so that ceiling wall mold specified separately will align with wall surface flat and straight.

8. Interior gypsum wallboard and ceiling installation may not commence until all exterior damp-proofing and roofing are completed and roof top equipment is fully installed and flashed and exterior wall openings are protected.

END OF SECTION 092900

SECTION 093000 - TILING

PART 1 - GENERAL

1.1 RELATED DOCUMENTS

A. Drawings and general provisions of the Contract, including General and Supplementary Conditions and Division 01 Specification Sections, apply to this Section.

1.2 SUMMARY

A. Section Includes:
   1. Ceramic, porcelain tile, stone tile, glazed tile
   2. Waterproof membrane.
   3. Crack isolation membrane.
   4. Metal edge strips.

1.3 DEFINITIONS

A. General: Definitions in the ANSI A108 series of tile installation standards and in ANSI A137.1 apply to Work of this Section unless otherwise specified.

B. ANSI A108 Series: ANSI A108.01, ANSI A108.02, ANSI A108.1A, ANSI A108.1B, ANSI A108.1C, ANSI A108.4, ANSI A108.5, ANSI A108.6, ANSI A108.8, ANSI A108.9, ANSI A108.10, ANSI A108.11, ANSI A108.12, ANSI A108.13, ANSI A108.14, ANSI A108.15, ANSI A108.16, and ANSI A108.17, which are contained in its "Specifications for Installation of Ceramic Tile."

C. Module Size: Actual tile size plus joint width indicated.

D. Face Size: Actual tile size, excluding spacer lugs.

1.4 PREINSTALLATION MEETINGS

A. Preinstallation Conference: Conduct conference at Project site.
   1. Review requirements in ANSI A108.01 for substrates and for preparation by other trades.

1.5 ACTION SUBMITTALS

A. Product Data: For each type of product.

B. Shop Drawings:
   1. Show locations of each type of tile and tile pattern.
   2. Show widths, details, and locations of expansion, contraction, control, and isolation joints in tile substrates and finished tile surfaces.

C. Samples for Initial Selection: For tile, grout, and accessories involving color selection.

D. Samples for Verification:
   1. Full-size units of each type and composition of tile and for each color and finish required. For ceramic mosaic tile in color blend patterns, provide full sheets of each color blend.
   2. Assembled samples mounted on a rigid panel, with grouted joints, for each type and composition of tile and for each color and finish required. Make samples at least 12 inches square, but not fewer than four tiles. Use grout of type and in color or colors approved for completed Work.
   3. Full-size units of each type of trim and accessory for each color and finish required.
   4. Stone thresholds in 6-inch lengths.
   5. Metal edge strips in 6-inch lengths.

1.6 INFORMATIONAL SUBMITTALS

A. Qualification Data: For Installer.

B. Master Grade Certificates: For each shipment, type, and composition of tile, signed by tile manufacturer and Installer.

C. Product Certificates: For each type of product.

D. Product Test Reports: For tile-setting and -grouting products.

1.7 MAINTENANCE MATERIAL SUBMITTALS

A. Furnish extra materials that match and are from same production runs as products installed and that are packaged with protective covering for storage and identified with labels describing contents.
   1. Tile and Trim Units: Furnish quantity of full-size units equal to 3 percent of amount installed for each type, composition, color, pattern, and size indicated.

2. Grout: Furnish quantity of grout equal to 3 percent of amount installed for each type, composition, and color indicated.

1.8 QUALITY ASSURANCE

A. Installer Qualifications:
1. Individual installer(s) working for installing contractor are certified through Advanced Certifications for Tile Installers (ACT) for installation of large format tile and substrate preparation, membranes, mud (mortar bed) floors, mud (mortar) walls, shower receptors.

B. Mockups: Build mockups to verify selections made under Sample submittals and to demonstrate aesthetic effects and set quality standards for materials and execution.
1. Build mockup of each type of floor tile installation.
2. Build mockup of each type of wall tile installation.
3. Subject to compliance with requirements, approved mockups may become part of the completed Work if undisturbed at time of Substantial Completion.

1.9 DELIVERY, STORAGE, AND HANDLING

A. Deliver and store packaged materials in original containers with seals unbroken and labels intact until time of use. Comply with requirements in ANSI A137.1 for labeling tile packages.

B. Store tile and cementitious materials on elevated platforms, under cover, and in a dry location.

C. Store aggregates where grading and other required characteristics can be maintained and contamination can be avoided.

D. Store liquid materials in unopened containers and protected from freezing.

1.10 FIELD CONDITIONS

A. Environmental Limitations: Do not install tile until construction in spaces is complete and ambient temperature and humidity conditions are maintained at the levels indicated in referenced standards and manufacturer's written instructions.

PART 2 - PRODUCTS

2.1 MANUFACTURERS

A. Source Limitations for Tile: Obtain tile of each type and color or finish from single source or producer.
1. Obtain tile of each type and color or finish from same production run and of consistent quality in appearance and physical properties for each contiguous area.

B. Source Limitations for Setting and Grouting Materials: Obtain ingredients of a uniform quality for each mortar, adhesive, and grout component from single manufacturer and each aggregate from single source or producer.
1. Obtain setting and grouting materials, except for unmodified Portland cement and aggregate, from single manufacturer.
2. Obtain waterproof membrane and crack suppressant membranes, except for sheet products, from manufacturer of setting and grouting materials.

C. Source Limitations for Other Products: Obtain each of the following products specified in this Section from a single manufacturer:
1. Stone thresholds.
2. Waterproof membrane.
3. Crack isolation membrane.
4. Cementitious backer units.
5. Metal edge strips.

2.2 PRODUCTS, GENERAL

A. VOC Limits: any adhesives, sealants, paints, or coatings shall meet the VOC limits indicated in Section 018113.

B. ANSI Ceramic Tile Standard: Provide tile that complies with ANSI A137.1 for types, compositions, and other characteristics indicated.
1. Provide tile complying with Standard grade requirements unless otherwise indicated.

C. ANSI Standards for Tile Installation Materials: Provide materials complying with ANSI A108.02, ANSI standards referenced in other Part 2 articles, ANSI standards referenced by TCNA installation methods specified in tile installation schedules, and other requirements specified.

D. Factory Blending: For tile exhibiting color variations within ranges, blend tile in factory and package so tile units taken from one package show same range in colors as those taken from other packages and match approved Samples.

E. Mounting: For factory-mounted tile, provide back- or edge-mounted tile assemblies as standard with manufacturer unless otherwise indicated.

1. Where tile is indicated for installation on exteriors, do not use back- or edge-mounted tile assemblies unless tile manufacturer specifies in writing that this type of mounting is suitable for installation indicated and has a record of successful in-service performance.

2.3 TILE PRODUCTS

A. Acceptable Manufacturers:

1. Emser.
2. QDI Surfaces.
3. Crossville Ceramics.
4. Inteceramic.
5. Caesar.

B. Basis of Design: **As indicated on Drawing Sheet A-681, Architectural Finish Schedule and Details.**

C. Coefficient of Friction: Tiles suitable for level interior spaces expected to be walked upon shall have a wet DCOF of 0.42 or greater when tested per the DCOF AcuTest.

D. Trim Units: Coordinated with sizes and coursing of adjoining flat tile where applicable and matching characteristics of adjoining flat tile. Provide shapes as follows, selected from manufacturer's standard shapes:

1. External Corners for Thinset Mortar Installations: Surface bullnose, same size as adjoining flat tile.
2. Internal Corners: Field-butted square corners. For coved base and cap use angle pieces designed to fit with stretcher shapes.

2.4 ACOUSTIC UNDERLAYMENT

A.

2.5 WATERPROOF MEMBRANE

A. General: Manufacturer's standard product, selected from the following, that complies with ANSI A118.10 and is recommended by the manufacturer for the application indicated. Include reinforcement and accessories recommended by manufacturer.

B. Chlorinated Polyethylene Sheet: Nonplasticized, chlorinated polyethylene faced on both sides with nonwoven polyester fabric.

1. Products: Subject to compliance with requirements, provide one of the following:
   a. Noble Company (The); Nobleseal TS.
   b. Schluter Systems; Kerdi
2. Nominal Thickness: 0.030 inch.

C. Fabric--Reinforced, Fluid-Applied Membrane: System consisting of liquid-latex rubber or elastomeric polymer and continuous fabric reinforcement.

1. Products: Subject to compliance with requirements, provide one of the following:
   a. Custom Building Products; 9240 Waterproofing and Anti-Fracture Membrane.
   b. Laticrete International, Inc.; Hydro Ban.
   c. MAPEI Corporation; Mapelastic HPG with MAPEI Fiberglass Mesh.

2.6 CRACK ISOLATION MEMBRANE

A. General: Manufacturer's standard product that complies with ANSI A118.12 for high performance and is recommended by the manufacturer for the application indicated. Include reinforcement and accessories recommended by manufacturer.

B. Chlorinated Polyethylene Sheet: Nonplasticized, chlorinated polyethylene faced on both sides with nonwoven polyester fabric; 0.030-inch nominal thickness.

1. Products: Subject to compliance with requirements, provide one of the following:
   a. Noble Company (The); Nobleseal CIS.
   b. Schluter Systems; Ditra

C. Fabric-Reinforced, Fluid-Applied Membrane: System consisting of liquid-latex rubber or elastomeric polymer and fabric reinforcement.

1. Products: Subject to compliance with requirements, [provide the following] [provide one of the following] [available products that may be incorporated into the Work include, but are not limited to, the following]:
   a. Custom Building Products; 9240 Waterproofing and Anti-Fracture Membrane.

b. Laticrete International, Inc.; Hydro Ban.
c. MAPEI Corporation; Mapelastic HPG with MAPEI Fiberglass Mesh.

2.7 SETTING MATERIALS

A. Portland Cement Mortar (Thickset) Installation Materials: ANSI A108.02.
1. Cleavage Membrane: Asphalt felt, ASTM D 226/D 226M, Type I (No. 15); or polyethylene sheeting, ASTM D 4397, 4.0 mils thick.
2. Reinforcing Wire Fabric: Galvanized, welded-wire fabric, 2 by 2 inches by 0.062-inch diameter; comply with ASTM A 185/A 185M and ASTM A 82/A 82M, except for minimum wire size.
3. Latex Additive: Manufacturer's standard water emulsion, serving as replacement for part or all of gaging water, of type specifically recommended by latex-additive manufacturer for use with field-mixed portland cement and aggregate mortar bed.

B. Latex-Portland Cement Mortar (Thinset): ANSI A118.4.
1. Manufacturers: Subject to compliance with requirements, provide products by one of the following:
a. Ardex Americas.
b. Custom Building Products.
c. Laticrete International, Inc.
d. MAPEI Corporation.
2. Provide prepackaged, dry-mortar mix containing dry, redispersible, vinyl acetate or acrylic additive to which only water must be added at Project site.
3. Provide prepackaged, dry-mortar mix combined with acrylic resin liquid-latex additive at Project site.
4. For wall applications, provide mortar that complies with requirements for nonsagging mortar in addition to the other requirements in ANSI A118.4.

C. Medium-Bed, Latex-Portland Cement Mortar: Comply with requirements in ANSI A118.4. Provide product that is approved by manufacturer for application thickness of 5/8 inch.
1. Basis-of-Design Product: Subject to compliance with requirements, provide product indicated on Drawings or comparable product by one of the following:
a. Ardex Americas.
b. Custom Building Products.
c. Laticrete International, Inc.
d. MAPEI Corporation.
2. Provide prepackaged, dry-mortar mix containing dry, redispersible, vinyl acetate or acrylic additive to which only water must be added at Project site.
3. Provide prepackaged, dry-mortar mix combined with acrylic resin liquid-latex additive at Project site.

2.8 GROUT MATERIALS

A. Polymer-Modified Cementitious Grout: ANSI A118.7.
1. Manufacturers: Subject to compliance with requirements, provide products by one of the following:
a. Bostik, Inc.
b. Custom Building Products.
c. Laticrete International, Inc.
d. MAPEI Corporation.
e. Tex-Rite.
2. Polymer Type: Acrylic resin or styrene-butadiene rubber in liquid-latex form for addition to prepackaged dry-grout mix. Basis of Design:
a. GRT-1: (Wall Tile Grout, with joint width 1/8” or less) Laticrete 1600 Unsanded Grout with Laticrete 1776 Grout Enhancer
b. GRT-2: (Wall / Floor Tile, with joint with 1/8” to ½”) Laticrete 1500 Sanded Grout with Laticrete 1776 Grout Enhancer
c. GRT-3: (Wall / Floor Tile Consistent Color) Laticrete PermaColor Grout

B. Water-Cleanable Epoxy Grout: ANSI A118.3.
1. Manufacturers: Subject to compliance with requirements, provide products by one of the following:
a. Bostik, Inc.
b. Custom Building Products.
c. Laticrete International, Inc.
d. MAPEI Corporation.
e. Tex-Rite.

2. Basis of Design:
   a. Grout submittal to be approved by Architect.

2.9 MISCELLANEOUS MATERIALS

A. Trowelable Underlayments and Patching Compounds: Latex-modified, portland cement-based formulation provided or approved by manufacturer of tile-setting materials for installations indicated.

B. Metal Edge Strips: Angle or L-shaped, height to match tile and setting-bed thickness, metallic or combination of metal and PVC or neoprene base, designed specifically for flooring applications; stainless-steel, ASTM A 666, 300 Series exposed-edge material.
   1. Manufacturers: Subject to compliance with requirements, provide products by the following:
   2. Basis-of-Design Product: Schluter Systems L.P.

C. Tile Cleaner: A neutral cleaner capable of removing soil and residue without harming tile and grout surfaces, specifically approved for materials and installations indicated by tile and grout manufacturers.

D. Grout Sealer: Colorless, stain- and slip-resistant sealer, not affecting color or physical properties of stone surfaces grout as recommended by grout manufacturer for application indicated.
   1. Basis of Design: Laticrete Stonetech

E. Stone Floor Sealer: Colorless, stain- and slip-resistant sealer, not affecting color or physical properties of stone surfaces as recommended by stone producers for application indicated.
   1. Manufacturers: Subject to compliance with requirements, provide products by one of the following:
      a. Bostik, Inc.
      b. Custom Building Products
      c. Hillyard, Inc.
      d. HMK Stone Care System.
      e. Acceptable Product: Custom Building Products Aqua Mix Sealer's Choice Gold. Laticrete Stonetech BulletProof Sealer.

PART 3 - EXECUTION

3.1 EXAMINATION

A. Examine substrates, areas, and conditions where tile will be installed, with Installer present, for compliance with requirements for installation tolerances and other conditions affecting performance of the Work.
   1. Verify that substrates for setting tile are firm; dry; clean; free of coatings that are incompatible with tile-setting materials, including curing compounds and other substances that contain soap, wax, oil, or silicone; and comply with flatness tolerances required by ANSI A108.01 for installations indicated.
   2. Verify that concrete substrates for tile floors installed with thinset mortar comply with surface finish requirements in ANSI A108.01 for installations indicated.
      a. Verify that surfaces that received a steel trowel finish have been mechanically scarified.
      b. Verify that protrusions, bumps, and ridges have been removed by sanding or grinding.
   3. Verify that installation of grounds, anchors, recessed frames, electrical and mechanical units of work, and similar items located in or behind tile has been completed.
   4. Verify that joints and cracks in tile substrates are coordinated with tile joint locations; if not coordinated, adjust joint locations in consultation with Architect.

B. Proceed with installation only after unsatisfactory conditions have been corrected.

3.2 PREPARATION

A. Fill cracks, holes, and depressions in concrete substrates for tile floors installed with thinset mortar with trowelable leveling and patching compound specifically recommended by tile-setting material manufacturer.

B. Where indicated, prepare substrates to receive waterproofing by applying a reinforced mortar bed that complies with ANSI A108.1A and is sloped 1/4 inch per foot toward drains.

C. Blending: For tile exhibiting color variations, verify that tile has been factory blended and packaged so tile units taken from one package show same range of colors as those taken from other packages and match approved Samples. If not factory blended, either return to manufacturer or blend tiles at Project site before installing.

3.3 CERAMIC TILE INSTALLATION

A. Comply with TCNA's "Handbook for Ceramic, Glass, and Stone Tile Installation" for TCNA installation methods specified in tile installation schedules. Comply with parts of the ANSI A108 series "Specifications for Installation of Ceramic Tile" that are referenced in TCNA installation methods, specified in tile installation schedules, and apply to types of setting and grouting materials used.
   1. For the following installations, follow procedures in the ANSI A108 series of tile installation standards for providing 95 percent mortar coverage:
      a. Exterior tile floors.
      b. Tile floors in wet areas.
      c. Tile swimming pool decks.
      d. Tile floors consisting of tiles 8 by 8 inches or larger.
      e. Tile floors consisting of rib-backed tiles.

B. Extend tile work into recesses and under or behind equipment and fixtures to form complete covering without interruptions unless otherwise indicated. Terminate work neatly at obstructions, edges, and corners without disrupting pattern or joint alignments.

C. Accurately form intersections and returns. Perform cutting and drilling of tile without marring visible surfaces. Carefully grind cut edges of tile abutting trim, finish, or built-in items for straight aligned joints. Fit tile closely to electrical outlets, piping, fixtures, and other penetrations so plates, collars, or covers overlap tile.

D. Provide manufacturer's standard trim shapes where necessary to eliminate exposed tile edges.

E. Where accent tile differs in thickness from field tile, vary setting-bed thickness so that tiles are flush.

F. Jointing Pattern: Lay tile in grid pattern unless otherwise indicated. Lay out tile work and center tile fields in both directions in each space or on each wall area. Lay out tile work to minimize the use of pieces that are less than half of a tile. Provide uniform joint widths unless otherwise indicated.
   1. For tile mounted in sheets, make joints between tile sheets same width as joints within tile sheets so joints between sheets are not apparent in finished work.
   2. Where adjoining tiles on floor, base, walls, or trim are specified or indicated to be same size, align joints.
   3. Where tiles are specified or indicated to be whole integer multiples of adjoining tiles on floor, base, walls, or trim, align joints unless otherwise indicated.

G. Joint Widths: Unless otherwise indicated, install tile with the following joint widths:
   1. Ceramic Mosaic Tile: 1/16 inch.
   2. Quarry Tile: 3/8 inch.
   3. Pressed Floor Tile: 3/8 inch.
   4. Glazed Wall Tile: 1/16 inch.
   5. Porcelain Tile: 3/8 inch.

H. Lay out tile wainscots to dimensions indicated or to next full tile beyond dimensions indicated.

I. Expansion Joints: Provide expansion joints and other sealant-filled joints, including control, contraction, and isolation joints, as required. Form joints during installation of setting materials, mortar beds, and tile. Do not saw-cut joints after installing tiles.
   1. Where joints occur in concrete substrates, locate joints in tile surfaces directly above them.

J. Stone Thresholds: Install stone thresholds in same type of setting bed as adjacent floor unless otherwise indicated.
   1. At locations where mortar bed (thickset) would otherwise be exposed above adjacent floor finishes, set thresholds in latex-portland cement mortar (thinset).
   2. Do not extend waterproofing under thresholds set in latex-portland cement mortar. Fill joints between such thresholds and adjoining tile set on waterproofing with elastomeric sealant.

K. Metal Edge Strips: Install where exposed edge of tile flooring meets carpet, wood, or other flooring that finishes flush with top of tile.

L. Grout Sealer: Apply grout sealer to cementitious grout joints in tile floors according to grout-sealer manufacturer's written instructions. As soon as grout sealer has penetrated grout joints, remove excess sealer and sealer from tile faces by wiping with soft cloth.

M. Apply sealer to cleaned stone flooring according to sealer manufacturer's written instructions.

3.4 TILE BACKING PANEL INSTALLATION

A. Install panels and treat joints according to ANSI A108.11 and manufacturer's written instructions for type of application indicated. Use latex-portland cement mortar for bonding material unless otherwise directed in manufacturer's written instructions.

3.5 WATERPROOFING INSTALLATION

A. Install waterproofing to comply with ANSI A108.13 and manufacturer's written instructions to produce waterproof membrane of uniform thickness that is bonded securely to substrate.

B. Allow waterproofing to cure and verify by testing that it is watertight before installing tile or setting materials over it.

3.6 CRACK ISOLATION MEMBRANE INSTALLATION

A. Install crack isolation membrane to comply with ANSI A108.17 and manufacturer's written instructions to produce membrane of uniform thickness that is bonded securely to substrate.

B. Allow crack isolation membrane to cure before installing tile or setting materials over it.

3.7 ADJUSTING AND CLEANING

A. Remove and replace tile that is damaged or that does not match adjoining tile. Provide new matching units, installed as specified and in a manner to eliminate evidence of replacement.

B. Cleaning: On completion of placement and grouting, clean all ceramic tile surfaces so they are free of foreign matter.

1. Remove grout residue from tile as soon as possible.
2. Clean grout smears and haze from tile according to tile and grout manufacturer's written instructions but no sooner than 10 days after installation. Use only cleaners recommended by tile and grout manufacturers and only after determining that cleaners are safe to use by testing on samples of tile and other surfaces to be cleaned. Protect metal surfaces and plumbing fixtures from effects of cleaning. Flush surfaces with clean water before and after cleaning.

3.8 PROTECTION

A. Protect installed tile work with kraft paper or other heavy covering during construction period to prevent staining, damage, and wear. If recommended by tile manufacturer, apply coat of neutral protective cleaner to completed tile walls and floors.

B. Prohibit foot and wheel traffic from tiled floors for at least seven days after grouting is completed.

C. Before final inspection, remove protective coverings and rinse neutral protective cleaner from tile surfaces.

END OF SECTION 093000

SECTION 095100 - ACOUSTICAL CEILINGS

PART 1 - GENERAL

1.1 SECTION REQUIREMENTS

A. Submittals: Product Data and Samples.

PART 2 - PRODUCTS PANELS

A. Basis-of-Design Product:

1. Armstrong World Industries, Inc. **Fissured #756** (to match existing ceiling panels)

B. Classification: As follows, per ASTM E 1264:

1. Type and Form: **Type III, Form 2**
2. Pattern: **D (fissured)**
3. Light Reflectance (LR) Coefficient: Not less than **0.80**
4. Noise Reduction Coefficient (NRC): Not less than 0.55
5. Ceiling Attenuation Class (CAC): Not less than **30**.
6. Anti-microbial
7. Surface-Burning Characteristics: **Class A**

C. Color: **White**

D. Edge Detail: **Square**.

E. Thickness: **5/8 inch (15 mm)**.

F. Modular Size: **24 by 24 inches (610 by 610 mm)**.

2.2 CEILING SUSPENSION SYSTEM

A. Ceiling Suspension System: Pre-lude ML exposed Tee – 15/16”
1. Basis-of-Design Product:

a. Armstrong World Industries, Inc.

2. Face Design: **Flat, flush**
3. Face Finish: **Painted white**

B. Ceiling Suspension System: **Direct hung**; ASTM C 635, **intermediate** duty structural classification.
1. Basis-of-Design Product:

a. Armstrong World Industries, Inc.

C. Wire Hangers, Braces, and Ties: Zinc-coated carbon-steel wire; ASTM A 641/A 641M, Class 1 zinc coating, soft temper.

1. Size: Provide yield strength at least 3 times the hanger design load (ASTM C 635, Table 1, Direct Hung), but not less than **0.106-inch- (2.69-mm-).** diameter wire.

2. Lights: provide one wire hanger at each corner.

D. Access: Identify **upward** access tile with manufacturer's standard unobtrusive markers for each access unit.

2.3 MISCELLANEOUS MATERIALS

A. Acoustical Tile Adhesive: (if required) Type recommended by acoustical tile manufacturer, bearing UL label for Class 0-25 flame spread.

1. Adhesive shall have a VOC content of 50 g/L or less.
2. Adhesive shall comply with Green Seal's GS-36 and with the testing and product requirements of the California Department of Health Services' "Standard Practice for the Testing of Volatile Organic Emissions from Various Sources Using Small-Scale Environmental Chambers."

PART 3 - EXECUTION

3.1 INSTALLATION

A. Install acoustical ceilings to comply with ASTM C 636/C 636M, according to manufacturer's written instructions and CISCA's "Ceiling Systems Handbook."

B. Install acoustical panels with undamaged edges and fit accurately into suspension system runners and edge moldings. Scribe and cut panels at borders and penetrations to provide a neat, precise fit.

C. Adhesive Installation: (If required) Install acoustical tile by bonding to substrate, using amount of adhesive and procedure recommended in writing by tile manufacturer and as follows:

1. Install splines in joints between tiles; maintain bottom surface of tiles in a level plane.
2. Maintain tight butt joints, aligned in both directions and coordinated with ceiling fixtures.

D. Arrange directionally patterned acoustical units to match existing ceiling pattern.

END OF SECTION 095100

SECTION 096513 - RESILIENT BASE AND ACCESSORIES

PART 1 - GENERAL

1.1 RELATED DOCUMENTS

A. Drawings and general provisions of the Contract, including General and Supplementary Conditions and Division 01 Specification Sections, apply to this Section.

1.2 SUMMARY

A. Section Includes:
   1. Resilient base.
   2. Resilient stair accessories.
   3. Resilient molding accessories.

1.3 ACTION SUBMITTALS

A. Product Data: For each type of product.

B. Sustainable Documentation Submittals:
   1. Recycled Content:
      a. Product data and certification letter indicating percentages by weight of post-consumer and pre-consumer recycled content for products having recycled content.
      b. Include statement indicating costs for each product having recycled content.
   2. Regional Material:
      a. Product data for regional materials (within 500 miles of construction site) indicating location and distance from Project of material manufacturer and point of extraction, harvest, or recovery for each raw material.
      b. Include statement indicating cost for each regional material and the fraction by weight that is considered regional.
      c. For metal products, provide statement from manufacturer indicating location for scrap collection and other recycled materials include in the product and its distance from the project site.
   3. VOC content data. Provide for any adhesives, sealants, paints, or coatings used on the interior of the building.
      a. Product information or statement from manufacturer indicating the VOC content of the product in grams per liter (g/L).
   4. Product data for flooring compliant with FloorScore standard. An acceptable alternative to FloorScore certified flooring is the use of flooring that meets testing and product requirements of the California Department of Health Services Standard Practice for the Testing of Volatile Organic Emissions from Various Sources Using Small-Scale Environmental Chambers, including 2004 Addenda.

C. Samples: For each exposed product and for each color and texture specified, not less than 12 inches long.

D. Product Schedule: For resilient base and accessory products. Use same designations indicated on Drawings.

1.4 MAINTENANCE MATERIAL SUBMITTALS

A. Furnish extra materials that match products installed and that are packaged with protective covering for storage and identified with labels describing contents.
   1. Furnish not less than 10 linear feet or every 500 linear feet or fraction thereof, of each type, color, pattern, and size of resilient product installed.

1.5 QUALITY ASSURANCE

A. Mockups: Build mockups to verify selections made under Sample submittals and to demonstrate aesthetic effects and set quality standards for materials and execution.
   1. Coordinate mockups in this Section with mockups specified in other Sections.

1.6 DELIVERY, STORAGE, AND HANDLING

A. Store resilient products and installation materials in dry spaces protected from the weather, with ambient temperatures maintained within range recommended by manufacturer, but not less than 50 deg F or more than 90 deg F.

1.7 FIELD CONDITIONS

A. Maintain ambient temperatures within range recommended by manufacturer, but not less than 70 deg F or more than 95 deg F, in spaces to receive resilient products during the following time periods:
   1. 48 hours before installation.
   2. During installation.
   3. 48 hours after installation.

B. After installation and until Substantial Completion, maintain ambient temperatures within range recommended by manufacturer, but not less than 55 deg For more than 95 deg F.

C. Install resilient products after other finishing operations, including painting, have been completed.

PART 2 - PRODUCTS

2.1 THERMOSET-RUBBER BASE

A. VOC Limits: any adhesives, sealants, paints, or coatings shall meet the VOC limits indicated in Section 018113.

B. Manufacturers: Subject to compliance with requirements, provide products by one of the following:
   1. Burke Mercer Flooring Products, Division of Burke Industries Inc.
   2. Flexco.
   3. Roppe Corporation, USA.

C. Basis of Design: Refer to Architect's Master Schedule.

D. Product Standard: ASTM F 1861, Type TS (rubber, vulcanized thermoset), Group I (solid, homogeneous).

E. Thickness: As indicated in Architect's Master Schedule.

F. Height: As indicated in Architect's Master Schedule.

G. Lengths: Coils in manufacturer's standard length.

H. Outside Corners: Job formed .

I. Inside Corners: Job formed .

2.2 RUBBER STAIR ACCESSORIES

A. VOC Limits: any adhesives, sealants, paints, or coatings shall meet the VOC limits indicated in Section 018113.

B. Fire-Test-Response Characteristics: As determined by testing identical products according to ASTM E 648 or NFPA 253 by a qualified testing agency.
   1. Critical Radiant Flux Classification: Class I, not less than 0.45 W/sq. cm.

C. Manufacturers: Subject to compliance with requirements, provide products by the following:
   1. Armstrong World Industries, Inc.
   2. Burke Mercer Flooring Products, Division of Burke Industries Inc.
   3. Flexco.
   4. Johnsonite; A Tarkett Company.
   5. Mondo Rubber International, Inc.
   6. Musson Rubber Company.
   7. Roppe Corporation, USA.

D. Basis of Design: Refer to Architect's Master Schedule.

E. Stair Treads: ASTM F 2169.
   1. Class: 2 (pattern; embossed, grooved, or ribbed).
   2. Group: 1 (embedded abrasive strips).
   3. Nosing Style: Square, adjustable to cover angles between 60 and 90 degrees.
   4. Nosing Height: 2 inches.
   5. Thickness: 1/4 inch and tapered to back edge.
   6. Size: Lengths and depths to fit each stair tread in one piece.
   7. Integral Risers: Smooth, flat; in height that fully covers substrate.

F. Landing Tile: Matching treads; produced by same manufacturer as treads and recommended by manufacturer for installation with treads.

G. Locations: Provide rubber stair accessories in areas indicated.

H. Colors and Patterns: As scheduled .

2.3 RUBBER MOLDING ACCESSORY

A. VOC Limits: any adhesives, sealants, paints, or coatings shall meet the VOC limits indicated in Section 018113.

B. Manufacturers: Subject to compliance with requirements, provide products by one of the following:

1. Roppe Corporation, USA.
2. VPI, LLC, Floor Products Division.

C. Basis of Design: Refer to Architect's Master Schedule.
D. Description: Rubber nosing for carpet and resilient flooring
E. Locations: Provide rubber molding accessories in areas indicated.

2.4 INSTALLATION MATERIALS

A. Trowelable Leveling and Patching Compounds: Latex-modified, portland cement based or blended hydraulic-cement-based formulation provided or approved by resilient-product manufacturer for applications indicated.
B. Adhesives: Water-resistant type recommended by resilient-product manufacturer for resilient products and substrate conditions indicated.

PART 3 - EXECUTION

3.1 EXAMINATION

A. Examine substrates, with Installer present, for compliance with requirements for maximum moisture content and other conditions affecting performance of the Work.
1. Verify that finishes of substrates comply with tolerances and other requirements specified in other Sections and that substrates are free of cracks, ridges, depressions, scale, and foreign deposits that might interfere with adhesion of resilient products.
B. Proceed with installation only after unsatisfactory conditions have been corrected.
1. Installation of resilient products indicates acceptance of surfaces and conditions.

3.2 PREPARATION

A. Prepare substrates according to manufacturer's written instructions to ensure adhesion of resilient products.
B. Concrete Substrates for Resilient Stair Accessories: Prepare horizontal surfaces according to ASTM F 710.
1. Verify that substrates are dry and free of curing compounds, sealers, and hardeners.
2. Remove substrate coatings and other substances that are incompatible with adhesives and that contain soap, wax, oil, or silicone, using mechanical methods recommended by manufacturer. Do not use solvents.
3. Alkalinity and Adhesion Testing: Perform tests recommended by manufacturer. Proceed with installation only after substrate alkalinity falls within range on pH scale recommended by manufacturer in writing, but not less than 5 or more than 9 pH.
4. Moisture Testing: Proceed with installation only after substrates pass testing according to manufacturer's written recommendations, but not less stringent than the following:
a. Perform anhydrous calcium chloride test according to ASTM F 1869. Proceed with installation only after substrates have maximum moisture-vapor-emission rate of 3 lb of water/1000 sq. ft. in 24 hours.
b. Perform relative humidity test using in situ probes according to ASTM F 2170. Proceed with installation only after substrates have maximum 75 percent relative humidity level.
C. Fill cracks, holes, and depressions in substrates with trowelable leveling and patching compound; remove bumps and ridges to produce a uniform and smooth substrate.
D. Do not install resilient products until they are the same temperature as the space where they are to be installed.
1. At least 48 hours in advance of installation, move resilient products and installation materials into spaces where they will be installed.
E. Immediately before installation, sweep and vacuum clean substrates to be covered by resilient products.

3.3 RESILIENT BASE INSTALLATION

A. Comply with manufacturer's written instructions for installing resilient base.
B. Apply resilient base to walls, columns, pilasters, casework and cabinets in toe spaces, and other permanent fixtures in rooms and areas where base is required.
C. Install resilient base in lengths as long as practical without gaps at seams and with tops of adjacent pieces aligned.
D. Tightly adhere resilient base to substrate throughout length of each piece, with base in continuous contact with horizontal and vertical substrates.
E. Do not stretch resilient base during installation.

F. On masonry surfaces or other similar irregular substrates, fill voids along top edge of resilient base with manufacturer's recommended adhesive filler material.
G. Preformed Corners: Install preformed corners before installing straight pieces.
H. Job-Formed Corners:
1. Outside Corners: Use straight pieces of maximum lengths possible and form with returns not less than 3 inches in length.
a. Form without producing discoloration (whitening) at bends.
2. Inside Corners: Use straight pieces of maximum lengths possible and form with returns not less than 3 inches in length.
a. Miter corners to minimize open joints.

3.4 RESILIENT ACCESSORY INSTALLATION
A. Comply with manufacturer's written instructions for installing resilient accessories.
B. Resilient Stair Accessories:
1. Use stair-tread-nose filler to fill nosing substrates that do not conform to tread contours.
2. Tightly adhere to substrates throughout length of each piece.
3. For treads installed as separate, equal-length units, install to produce a flush joint between units.
C. Resilient Molding Accessories: Butt to adjacent materials and tightly adhere to substrates throughout length of each piece. Install reducer strips at edges of floor covering that would otherwise be exposed.

3.5 CLEANING AND PROTECTION
A. Comply with manufacturer's written instructions for cleaning and protecting resilient products.
B. Perform the following operations immediately after completing resilient-product installation:
1. Remove adhesive and other blemishes from exposed surfaces.
2. Sweep and vacuum horizontal surfaces thoroughly.
3. Damp-mop horizontal surfaces to remove marks and soil.
C. Protect resilient products from mars, marks, indentations, and other damage from construction operations and placement of equipment and fixtures during remainder of construction period.

END OF SECTION 096513

SECTION 09 68 13
TILE CARPETING (CPT)

PART 1 - GENERAL

1.1 SUMMARY

A. Furnish labor, materials, tools, equipment, and services for Carpet Tile (CPT) in accordance with provisions of the Contract Documents.

B. Completely coordinate with work of other trades.

1.2 QUALITY ASSURANCE

A. Manufacturer Qualifications:
   1. Carpet manufacturer shall have no less than ten (10) years of production experience with carpet similar to type specified in this document; and whose published product literature clearly indicates compliance of products with requirements of this section.

B. Contractor Qualifications:
   1. Firm with not less than five (5) years of successful carpeting experience similar to work of this section and recommended and approved by the carpet manufacturer. Upon request, submit letter from carpet manufacturer stating certification qualifications and acceptance.

C. Installer Qualifications:
   1. Mill trained, skilled mechanics supervised by experienced superintendent with 50,000 yards experience.

D. Single Source Responsibility:
   1. Provide product material by a single manufacturer for each carpet type specified.

E. Fire and Smoke Compliance:
   1. Comply with DOC FF-1-70, standard for surface flammability of Carpets and Rugs.
   2. Critical Radiant Flux, per ASTM E648 and NFPA 253:
      a. Class I, not less than 0.45 W/cm2.
   3. Smoke Developed:
      a. 450 or less per ASTM E662 / NFPA 258.

F. Comply with DOC FF-1-70, standard for surface flammability of Carpets and Rugs.

1.3 SUBMITTALS

A. See Section 01 33 00 for requirements.

B. Product Data:
   1. For each type of material and accessory.

C. Samples:
   1. One sample 12 IN square of each material and color specified in I-001 Drawing Interior Finish Legend.

D. Contract Closeout Information:
   1. Warranty.
   2. Maintenance data:
      a. See Section 01 78 23.

1.4 WARRANTY

A. Replace damaged or defective carpet or carpet stained by adhesives for a period of two (2) years.

B. Warrant material will not degrade for fifteen (15) years due to following:

1. Delamination from face structure, shrinkage or stretching affecting performance of face or backing structure or causing tile to curl or dome.
2. Reduction of pile height by more than 15 PCT in any area.
3. Colorfastness to normal light as measured by AATCC 16E.
4. Normal atmospheric contaminates.
5. Pulling out of nap.
6. Edge ravel.

C. Warranty to include removal, replacement carpet tiles, installation, and disposal of defective carpet tiles.

PART 2 - PRODUCTS

2.1 ACCEPTABLE MANUFACTURERS

A. Carpet Tile (CPT):
   1. Base:
      a. As specified on Drawing Sheet A-681, Architectural Finish Schedule and Details.

B. Carpet Edging Strips:
   1. Base:
      a. Roppe
   2. Alternate:
      a. BurkeMercer.
      b. Johnsonite

C. Other manufacturers desiring approval comply with Section 01 25 00.

2.2 MATERIALS

A. Carpet Tile (CPT):
   1. First quality, no seconds or imperfects.
   2. Deliver with mill register numbers attached.
   3. Comply with applicable state and local codes.
   4. Verify flooring products comply with the requirements of the California Department of Public Health's "Standard Method for the Testing and Evaluation of Volatile Organic Chemical Emissions from Indoor Sources Using Environmental Chambers" Version 1.1-2010 (CA section 01350) & V1.2-2017.
   5. Wet-applied adhesive products must meet applicable chemical content requirements of SCAQMD Rule 1168, July 1, 2005 except where local or state requirements for VOCs utilize a different criteria.

B. Carpet Edging Strips:
   1. Base Product: Carpet to Resilient Transition for rolling traffic
   2. Thickness to match carpet.
   3. Color as selected by Architect. Match Carpet

C. Leveling Compound:
   1. Non-crumbling, non-staining, cementitious type.
   2. Mix with latex milk not water.
   3. Leveling compound shall have a VOC content no greater than 200 g/L.
   4. K-15 by Ardex or Ultraplan 1 Plus by Mapei.

D. Patching Compound:
   1. Fill cracks, joints, holes or uneven areas with non-crumbling latex base floor filler.
   2. Acceptable Product: LeveLastic by CMP Specialty Products.
   3. Do not mix with water.

E. Adhesive:
   1. Non-staining, non-bleeding strippable type.

2. As recommended by carpet manufacturer with VOC content no greater than 50 g/L.
3. Comply with Carpet and Rug Institute Green Label Plus Program for emissions standards.
4. Allow removal of carpet without damage or adherence to carpet.

F. Carpet Types:
1. See material and color specified in I-001 Drawing Interior Finish Legend.

PART 3 - EXECUTION

3.1 EXAMINATION

A. Verify concrete floor surfaces are suitable for Carpet Tile installation.

B. Coordinate installation with requirements of Section 07 16 04 Concrete Floor Moisture Testing, and Section 07 16 05 Water Vapor Emission Control System.

3.2 PREPARATION

A. Clean areas to receive carpet tile.
1. Strip waxes and finishes.
2. Vacuum and wet mop.

B. Layout:
1. Arrange joints symmetrically at centerline of rooms.
2. Lay and match adjacent tiles for pile and pattern directions.

3.3 INSTALLATION

A. Install carpet patterns in accordance to layouts indicated in Drawings.
1. Develop templates as required.

B. Comply with manufacturer's instructions and recommendations for seam locations, and lay of carpet pile.
1. Do not mix dye lots in same area.
2. Install carpet under open bottom items, removable flanges, furnishings, alcoves and closets.
3. Install tight against walls, columns, cabinets and over recessed door closers.
4. Butt edges tight without distortion.
5. Where carpet tiles abut deeper finish flooring materials, feather leveling compound for approximately 12 IN for each 1/8 IN of rise so finished surfaces align.
6. Fill or level floors at uneven areas with leveling compound and feather minimum 4 FT- 0 IN.
7. Expansion joints:
   a. Do not bridge building expansion joints with continuous carpeting.
   b. Provide for movement.

C. Install carpet edging strips, transition strips and reducer strips at non-carpeted floor surface.
1. Conceal cut edges with protective edge guards or overlapping flanges.
2. Score and trim narrow end of reducer strip to conform to adjacent floor finish.

3.4 CLEAN

A. Remove spots and adhesive from face or seams in accordance with manufacturer recommendations.

B. Vacuum using pile lifter.

C. Advise Owner regarding care and maintenance.

END OF SECTION

SECTION 099000 - PAINTING AND COATING

PART 1 - GENERAL

1.1 SECTION REQUIREMENTS

A. Submittals:
   1. Samples.

B. Coordination of work specified. Substrate inspection by painting contractor of preceding trades for proper preparation of substrates. Ask for notification for any item to receive paint which may not be covered by a scheduled finish type.

C. Extra Materials: Deliver to Owner **1 gal.** of each color and type of finish coat paint used on Project, in containers, properly labeled and sealed.

D. Warranty: Provide a written warranty for the work specified for two years against becoming unserviceable or causing an objectionable appearance resulting from either defective or non-conforming materials or workmanship.
   1. Defects may include discoloring noticeably by yellowing, streaking, blooming, changing color or darkening, mildewing, peeling, cracking, blistering, alligatoring or releasing from the substrate, chalking or dusting excessively, changing sheen in irregular fashion, softening or becoming tacky and bubbling. In the event of damage, immediately make all repairs and replacements necessary at no additional cost to owner.

PART 2 - PRODUCTS

2.1 PAINT – All paint materials selected for coating system for each type of surface shall be the product of a single manufacturer and shall, as a system, have flame spread, fuel combination, and smoke density test results less than 25.

A. Paint materials listed as the basis specification herein, unless otherwise designated in the “Painting Schedule”, are the products of The Sherwin Williams Company, Cleveland, Ohio and require no further approval as to manufacturer or catalogue number.

2.2 MATERIALS

A. Paint and coatings should be ready mixed, except for field catalyzed coating; having good flow and brushing properties and consistent drying or curing behavior, free of sags and streaks.

B. For architectural paints, coatings, and primers applied to interior walls and ceiling, do not exceed the VOC content limits established in Green Seal Standard GS-11. Flat paints should have 50 g/L and non-flats 150 g/L.
   1. For anti-corrosive and anti-rust paints applied to interior ferrous metal substrates, do not exceed the VOC content limit of 250 g/L established in Green Seal Standard GC-03, Anti- Corrosive Paints.

2. For clear wood finishes, floor coatings, stains, sealers and shellacs applied to interior elements, do not exceed the VOC content limits established in South Coast Air Quality Management District (SCAQMD) Rule 1113, Architectural Coatings. Clear wood finish should be varnish 350 g/L or lacquer 550 g/L. Floor coatings shall be 100 g/L and sealers should be 250 g/L for waterproofing and 275 g/L for sanding. Stains shall be 250 g/L.

C. Accessory material include linseed oil, turpentine, and paint thinners as recommended by paint and coatings manufacturer as necessary to achieve finishes as specified.

D. Patching and surface prep are typically latex fillers as recommended by manufacturer.

PART 3 - EXECUTION

3.1 PREPARATION

A. Comply with recommendations in MPI's "MPI Architectural Painting Specification Manual" applicable to substrates indicated.

B. Remove hardware, lighting fixtures, and similar items that are not to be painted. Mask items that cannot be removed. Reinstall items in each area after painting is complete.

C. Clean and prepare surfaces in an area before beginning painting in that area. Schedule painting so cleaning operations will not damage newly painted surfaces.

3.2 APPLICATION

A. Comply with recommendations in MPI's "MPI Architectural Painting Specification Manual" applicable to substrates indicated.

B. Paint exposed surface**,** unless otherwise indicated.

1. Paint surfaces behind movable equipment and furniture same as similar exposed surfaces.
2. Paint surfaces behind permanently fixed equipment or furniture with prime coat only.
3. Paint the back side of access panels.
4. Color-code mechanical piping in accessible ceiling spaces.
5. Do not paint prefinished items, items with an integral finish, operating parts, and labels unless otherwise indicated.

C. Apply paints according to manufacturer's written instructions.

1. Use brushes only for exterior painting and where the use of other applicators is not practical.
2. Use rollers for finish coat on interior walls and ceilings.

D. Apply paints to produce surface films without cloudiness, spotting, holidays, laps, brush marks, roller tracking, runs, sags, ropiness, or other surface imperfections. Cut in sharp lines and color breaks.

1. If undercoats or other conditions show through topcoat, apply additional coats until cured film has a uniform paint finish, color, and appearance.

E. Apply stains and transparent finishes to produce surface films without color irregularity, cloudiness, holidays, lap marks, brush marks, runs, ropiness, or other imperfections. Use multiple coats to produce a smooth surface film of even luster.

F. Verify that shop applied primers are compatible with specified finish coats.

G. Measure moisture content of surfaces using an electronic moisture meter. Do not begin application of coatings unless moisture content of surfaces is below the maximum values: gypsum soffits, plaster, masonry and vertical concrete (12 percent), wood (15 percent), horizontal concrete (8 percent).

H. Spray equipment shall be the type recommended for the application and shall be maintained clean and in proper working order and shall be operated by person(s) or entity specializing in applications of paints and coatings of types specified with minimum five years experience.

I. Number of coats on each of several finishes shall be in accordance with detailed specifications, which will produce first quality finish when properly applied.

J. Temperature in the storage area shall be between 40 and 110 degrees F. Open and mix all materials in the storage area. Apply water-based paints only when temperature of surfaces to be painted and surrounding air temperatures are between 50 and 90 degrees F., unless otherwise permitted by paint manufacturer's printed instructions.

K. Do not paint in snow, fog, rain or mist, or when relative humidity exceeds 85 percent, or to damp or wet surfaces, unless otherwise permitted by paint manufacturer's printed instructions. Painting may be continued during inclement weather if areas and surfaces to be painted are enclosed and heated within temperature limits specified by paint manufacturer during application and drying method.

L. Surface must be clean to insure adhesion. Remove oil and grease with paint thinner. Wash off dirt with warm soapy water and rinse with clean water. Remove rust by wire brushing or sanding. Wall surfaces must be dry before painting. Verify moisture.

M. Unfinished Surfaces
1. Wood: Sand smooth and apply one coat of Primer Undercoat. After primer has dried overnight, putty nail holes and cracks, then spot-prime putty with primer. Again allow the primer to dry overnight, sand lightly and topcoat.
2. Masonry and Concrete: Remove efflorescence or cement dust on masonry and concrete by etching with a 10 percent solution of muriatic (Hydrochloric) acid. Flush off surface after etching with clean water, and paint while still damp. On surface where muriatic acid cannot be used to neutralize the efflorescence, remove the efflorescence by sanding, scraping or wire brushing ans apply a coat of Masonry Conditioner before painting. If efflorescence is not present, no primer is necessary on concrete and masonry surfaces. Fill voids and pores in concrete and haydite blocks with Latex Block Filler and allow to dry overnight before top-coating. New construction blocks will require two full coats of block filler prior to painting.
3. Iron and steel should be primed with metal primer and allowed to dry overnight.

4. Galvanized metal should be primed with galvanized metal primer and allow to dry overnight before top-coating.

N. Paint Thickness: provide the following minimum dry film thickness per coat unless noted otherwise.
1. Enamels on metal: 1 mil.
2. Latex paints: 1 mil.
3. Metal primers: 1.5 mils.
4. Undercoats 1.5 mils.
5. Oil paints 1.5 mils.
6. Epoxy coating 2.0 mils.
Thickness test: Use observation gauge that measures "V" shaped scratch.

O. Allow exterior paints to dry 72 hours between coats and interior paint to dry 24 hours between coats. Allow all enamels and varnishes to dry 24 hours between coats. If enamel and varnishes are tacky after 24 hours, allow additional time until finish is dry.

P. Leveling: Apply with proper consistency and quality so paint flows out to a level surface free of brush and roller marks, bubbles, dust, runs, sags and holidays. Spread evenly.

Q. First coat shall be white unless otherwise specified.

R. Keep project premises free of painting-related debris. Collect material that may constitute a fire hazard, place in closed metal containers and remove daily from site.

S. Exterior surfaces are divided into two (2) different categories, based upon color and level of graffiti resistance required. System 1 will be used when standard earthtone colors or neutral colors are specified, and System 2 will be used when bright colors (primary reds, yellows and oranges) are specified and/ or when a graffiti resistant coating is required.
1. Galvanized Metal:
   a. Surface Preparation: Acid etch galvanized surfaces that have not weathered at least 6 months prior to beginning painting operations.
   b. Primer: one coat Pro-Cryl Pro Industrial Universal Primer (B66W310)
   c. Finish: two coats Sher-Cryl HPA High Performance Acrylic (B66W300)
2. Un-galvanized Metal:
   a. Primer: One coat- Pro-Cryl Pro industrial Universal Primer (B66W310)
   b. Finish: Two coats Sher-Cryl HPA High Performance Acrylic (B66W300)
3. Concrete and CMU:
   a. Primer/ Finish: Two coats Loxon XP Exterior Waterproofing System, 14 -18 mils wet, 6.4-8.3 mils dry per coat.
4. Wood (includes plywood siding and wooden trim)
   a. Primer: One coat A-100 Latex Wood Primer(B42W41)
   b. Finish: Two coats A-100 Acrylic Gloss (A8 Series)
5. Fiber Cement Materials:
   a. Primer: one coat Loxon Masonry Primer (A24W300)
   b. Finish: two coats A-100 Acrylic Gloss (A-8 Series)
6. Parking Line and Driveway Paint: Setfast Waterborne Yellow (TM225) (meets Federal Specifications (FS) TTP-1952-B).
7. All piping in mechanical rooms shall be painted in their entirety, in colors: Gas lines (Orange), domestic cold water (white), domestic hot water (pink), heating hot water

(Red), condenser water (green) and chilled water (blue). Paint only newly installed lines, existing shall not receive new paint.

T. Interior Surfaces
1. Galvanized Metal:
   a. Primer: One coat Pro-Cryl Pro Industrial Universal Primer (B66W310)
   b. Finish: Two coats Pro Industrial 0 VOC Acrylic Semi-Gloss.
2. Gypsum Wall Board:
   a. Primer: One coat Pro Green 200 latex Primer (B28W600)
   b. Finish: Two coats Pro Green 200 Latex Egg-Shell (B31-600 Series)
3. Concrete & CMU (Enamel)
   a. Primer: Two coats Pro Mar Block Filler (B25W25)
   b. Finish: Two coats Pro Green 200 Latex Semi-gloss (B31-600 series)
4. Wood: (painted)
   a. Primer: Pro Mar Classic Latex Primer (B28W8111)
   b. Finish: Pro Classic Waterborne Semi-Gloss (B31 Series)
5. Wood: (Stained)
   a. Primer: Sher Wood BAC Wiping Stain (S64 Series)
   b. Finish: (First Coat) Wood Classics Polyurethane Varnish (A67 Series)
   c. Finish: (Second Coat) Wood Classics Polyurethane Varnish (A67 Series)
6. Gypsum Wallboard: (Epoxy) – Kitchens, bathrooms, laboratories, etc.
   a. Primer: One coat Pro Green 200 Latex Primer (B28W600)
   b. Finish: Two coats Water-Based Catalyzed Epoxy (B70/B60)
7. CMU: (epoxy)
   a. Primer: Two coats Pro Mar Block Filler (B25W25)
   b. Finish: Two coats Water-based Catalyzed Epoxy (B70/ B60)

END OF SECTION 099000

SECTION 101400 - **SIGNAGE**

PART 1 - GENERAL

1.1 SUMMARY

A. Related Documents: Provisions established in Conditions of the Contract, Division 01 - General Requirements, and the Drawings are collectively applicable to this Section.

B. Section Includes

1. Identifying devices where shown on the Drawings complete and as specified including the following:
   a. Parking signs indicating accessible spaces.
   b. Interior code required signs.
   c. Interior fit-out signs.

1.2 SUBMITTALS

A. Product Data: Include manufacturer's construction details relative to materials, dimensions of individual components, profiles, and finishes for each type of sign required.

B. Shop Drawings: Provide shop drawings for fabrication and installation of signs. Include plans, elevations, and large-scale sections of typical members and other components. Show anchors, accessories, layout, and installation details.

C. Samples for Verification:

1. Physical: Submit samples of one competed sign for review and approval. Approved sample may be incorporated into Project.
2. Color: Submit manufacturer's standard color selection chart. Do not proceed until colors have been selected, reviewed and approved.

1.3 QUALITY ASSURANCE

A. Single-Source Responsibility: For each separate type of sign required, obtain signs from one source from a single manufacturer.

B. Manufacturer shall have a minimum of five years of experience in the manufacturing of signs specified.

C. Codes and Standards:

1. Panel signs shall have 1/32-inch raised copy and grade 2 Braille, and shall comply with all existing federal, state, and local accessibility standards.
2. Code and Standards: Comply with American with Disabilities Act of 1990, Title 3 Provisions, Public Accommodations and Commercial Facilities. Updated March 15, 2012.
3. Comply with the State of Texas Accessibility Standards, 2012 edition, as administered by the Texas Department of Licensing and Regulation.

PART 2 - PRODUCTS

2.1 PRODUCTS, GENERAL

A. VOC Limits: any adhesives, sealants, paints, or coatings shall meet the VOC limits indicated in Section 018113.

2.2 MANUFACTURERS

A. Acceptable Manufacturers: Subject to compliance with requirements herein, provide products from one of the following:

1. Hardman Signs, Houston, TX
2. Graphtec, Houston, TX
3. Sparq1200, Houston, TX
4. National Signs, Houston, TX

2.3 HANDICAPPED PARKING

A. Screen Printed Signs:

1. .080" Aluminum with blue baked enamel finish and white screen printed copy.
2. Copy and Size:

a. "Handicapped Parking Only" - 12 inches by 18 inches.
b. "Van Accessible" - 12 inches by 6 inches.

B. Post: Galvanized pipe column minimum 9 feet long.

2.4 ROOM SIGNAGE SYSTEMS (INTERIOR CODE REQUIRED SIGNS)

A. Sign Face: Clear acrylic, 3/8” inch thick, matte first surface.
1. Adhesive: Pressure sensitive adhesive film, second surface.

B. Tactile Graphics and Text:
1. Fabrication: Provide tactile copy and grade 2 Braille raised 1/32 inch minimum from plaque first surface by manufacturer’s stratification process as follows:
a. Refer to drawings, photo-mechanical method.
2. Provide lettering and graphics precisely formed, uniformly opaque to comply with relevant ADA regulations and requirements indicated for size, style, spacing, content, position, and colors.

C. Non-Tactile Graphics and Text:
1. Sign Face:
a. Clear acrylic, 3/8” inch thick, matte first surface.
2. Text or graphic technique:
a. Screen process using subsurface method.
3. Provide lettering and graphics precisely formed, uniformly opaque, and consistent in size, style, spacing, content, position, and colors.

D. Evacuation Map: Architect to provide one sample egress map artwork, signage contractor to provide all egress maps needed.

E. Overall panel size: As required to meet code requirements

F. Panel colors: As selected by Architect.

G. Text or graphic colors: As selected by Architect.

H. Letter styles, colors, letter sizes and layout position: As selected by Architect.

I. Installation Method: System SA, silicone adhesive

2.5 Interior Fit-out Signage

A. same as code related

PART 3 - EXECUTION

3.1 DELIVERY AND STORAGE

A. Deliver and store identifying devices in protective wrappings until ready for installation. Install letters in protective wrappings and remove wrappings just prior to substantial completion.

3.2 INSTALLATION

A. Install signs plumb, level and square and in proper planes with other work, at heights required by accessibility codes and standards.

B. Anchor each plastic laminate sign with adhesive.

C. Install signs with sufficient amount of foam tape for proper installation.

D. Attach as recommended by sign manufacturer.

E. Anchor each sign with adhesive.

F. Coordinate arrival and installation of graphic signs with hardware installation. Graphic signs function as and are coordinated with the hardware as shown on the Drawings.

G. Room name signs shall be placed on the public side of the door except where noted otherwise.

H. Single Door Sign: Provide one sign as specified above, mounted to wall adjacent to door on knob side.

I. Pair of Doors: Provide one sign as specified above, mounted to adjacent wall closest to active leaf of door. Do not install sign where it will be obstructed by door when door is in the 'open' position.

J. Attachment: Mounting to surfaces shall be done by pressure sensitive frame double-faced tape. Signs shall be delivered to the project site with the tape in place and trimmed on each sign, but with the protective paper layer not removed. Paper layer shall be removed just prior to installation of signs.

3.3 EXTERIOR INSTALLATION - PARKING AND DIRECTIONAL SIGNS

A. Mount posts in 12 inch round by 2'-6" deep concrete footing.

B. Handicapped Signs: Mount signs at height to comply with accessibility codes.

3.4 COORDINATION

A. Coordinate the installation of the identifying devices with the hardware manufacturer for lockset and knob leave outs as detailed and scheduled.

3.5 DAMAGE

A. Any identifying device which is scratched or defaced will be rejected.

3.6 CLEANING

A. Remove protective materials and clean all signs. Clean surfaces with plain water or water with soap or household detergent.

END OF SECTION

SECTION 102113 - TOILET COMPARTMENTS

PART 1 - GENERAL

1.1 SECTION REQUIREMENTS

A. Submittals: Product Data, Shop Drawings, and Samples.

B. Warranty: Provide a fifteen (15) year warranty for the work specified against becoming unserviceable or causing an objectionable appearance resulting from either defective or nonconforming materials or workmanship.

PART 2 - PRODUCTS

2.1 TOILET COMPARTMENTS AND SCREENS

A. Manufacturers:

1. Scranton Products – "**Grey Hiny Hinge Traditional Door 2800**" EX

B. Accessibility Requirements: Comply with the latest standards of U.S. Architectural & Transportation Barriers Compliance Board's Accessibility Guidelines, ICC A117.1 and **Texas Department of Licensing and Regulation Standards of Accessible Design** for toilet compartments designated as accessible.

2.2 MATERIALS

A. Solid-Polymer: All toilet partitions shall be floor mounted, overhead braced, with non-corrosive panel doors and pilasters of solid polymer and in the dimensions and arrangements indicated on the drawings. Partitions between urinals and lavatories shall have floor mounted pilasters. Panels, doors and pilasters shall be fabricated from Polymer resins under high pressure forming a single component section which is waterproof, non-absorbent and has a self-lubricating surface that resists marking with pens, pencils or other writing utensils. The panel should have a manufacturer applied texture similar or equal to EX from Scranton Products.

2.3 CONSTRUCTION AND FABRICATION

A. Doors, Panels, and Pilasters shall be one (1) inch thick and all edges machined to a radius of 0.250 inch and all exposed edges to be free of saw marks made of HDPE (High Density Polyethylene), fabricated from polymer resins compounded under high pressure.

B. The panels should be waterproof and non-absorbent, with self- lubricating surface, resistant to marks by pens, pencils, markers and other writing instruments.

C. Dividing Panels and doors shall be 55" high and shall be mounted at 14inches above the finish floor.

D. Pilasters shall be 82 inches high.

E. Urinal Screens are 24 inches deep x 60 inches high and shall be mounted 12 inches above finished floor.

F. Doors, panels, urinal screens, and pilasters shall be equal to "Plasti-Glaze 280" in manufacturer's selected color.

G. Edging Strips are aluminum fastened to the bottom edge of all doors and panels utilizing vandal-proof stainless steel fasteners.

H. Door Hardware shall be as follows:
1. Require full length continuous adjustable helix hinge in brushed finish wurface manufactured from 14 gauge, 304 Stainless Steel, with stainless steel pin welded and ground. Both hinges shall be fastened with 3/4 inch long #14 stainless steel screws.
2. Each door requires one coat hook/ bumper with rubber bumper. No Zamac coated hardware.
3. Handicapped doors also require one door pull and one wall stop with rubber bumper.
4. Door strike and keeper are fabricated from heavy aluminum extrusion (6463-T5 alloy) with clear anodized finish with wrap around flange, surface mounted and thru-bolted to pilaster with one-way sex bolts. Size of strike shall be six (6) inches.
5. Door latch Housing shall be fabricated from heavy aluminum extrusion (6463- T5 Alloy) with clear anodized finish, surface mounted and thru-bolted to door with one-way sex bolts. Slide bolt and button shall be heavy aluminum with similar or equal to "Tuff-Coat Black" finish.

I. Pilaster Shoes shall be 3 inch high, 20 gauge stainless steel shoes with theft proof sex bolts.

J. Provide full length continuous wall brackets (6464 T5 Alloy) with mill finish weighing not less than 1.685 lbs. per linear foot similar or equal to section #58992 shall be used for all panels to pilaster, pilaster to wall, and panel to wall connections. Manufacturer to predrill holes spaced every six (6) inches along full length of brackets. Thru-bolt to panels and pilasters with one-way sex bolts.

K. Headrail to be fabricated from heavy aluminum extrusion (6463 T5 Alloy) with mill finish in anti-grip configuration weighing not less than 1.188 lbs. per linear foot similar or equal to section # 58993. Fasten to tops of pilasters and headrail brackets by thru-bolting with one-way sex bolts.

L. Headrail Brackets are 16 gauge stainless steel.

PART 3 - EXECUTION

3.1 INSTALLATION

A. Install units rigid, straight, level, and plumb, with not more than 3/8 inch between pilasters and panels and not more than 3/4 inch between panels and walls and in accordance with manufacturer's instructions. Provide brackets, pilaster shoes, bracing, and other components required for a complete installation. Use theft-resistant exposed fasteners finished to match hardware. Use sleeve nuts for through-bolt applications.

1. Stirrup Brackets: Align brackets at pilasters with brackets at walls. Locate wall brackets so holes for wall anchors occur in masonry or tile joints.
2. Set hinges on in-swinging doors to hold open approximately 30 degrees from closed position when unlatched. Set hinges on out-swinging doors and swing doors in entrance screens to return to fully closed position.

B. Provide blocking/ anchoring devices to secure to wall. Anchoring devices must be compatible to wall type to ensure adequate strength.

C. Install all partitions and compartments where indicated on the drawings, and as indicated on the shop drawings, anchoring all components firmly in place for a long life under hard use and incomplete accordance with the manufacturer's recommendations.

D. Pilaster shoes shall be anchored to the floor with No. 5 Plastic anchors and No. 14 stainless steel phillip head screws.

E. Attachment of brackets to adjacent wall construction shall be accomplished by one theft proof mushroom nail in head anchor directly behind the vertical edge of panels and pilasters at every 12 inches along the length of bracket and two No. 5 plastic anchors and No. 14 x 1-1/4 inch stainless steel phillips head screws at each 12 inch interval alternately spaced between anchor connections.

F. No evidence of drilling, cutting patching shall be visible in the finished work. Defaced finish will not be permitted. Damaged, scratched or marred defective materials will be rejected and shall be replaced with new materials.

G. Clearance of vertical edges of doors shall be uniform top to bottom and shall not exceed 3/16 inch.

H. Except for toilet partitions for the handicapped, adjust doors to remain at a uniformly open (not less than 30 degrees) position when unlocked.

END OF SECTION 102113

SECTION 102800 - TOILET ACCESSORIES

PART 1 - GENERAL

1.1 SECTION REQUIREMENTS

A. Submittals: Product Data.

B. Warranty: Provide warranty for the work specified herein for three (3) years, or provide manufacturer's standard warranty for specified products, against becoming unserviceable or causing an objectionable appearance resulting from either defective or nonconforming materials or workmanship.
   1. Defects shall include, but not limited to: delamination or deterioration of finish, noisy, rough or difficult operation, and failure to meet specified quality assurance requirements.
   2. Mirror Silver spoilage of 15 years.

PART 2 - PRODUCTS

2.1 Where products are named in the specifications, they are considered basis of specification. Other approved manufacturers must have a minimum of five (5) years experience manufacturing products meeting or exceeding the specifications to be considered.
   1. Specifications are based on products of Bobrick Washroom Equipment, Inc.

2.2 COMPONENTS

A. Accessories shall be shop assembled, free of dents and scratches and packaged complete with anchors and fittings, steel anchor plates, adapters, and anchor components for installation. Grind welded joints smooth and fabricate units made of metl sheet or seamless sheets, with flat surfaces.

B. Stainless Steel sheets shall meet ASTM A666 Type 302 or 304 and stainless steel tubing shall meet ASTM A269. Both shall have a No. 4 satin, unless otherwise specified, finish and a 22 US stainless gauge minimum thickness.

C. Chromium Plating shall be over nickel and comply with ASTM C456, Type SC 2

D. Framed mirrors shall be1/4 inch thick with an electrolytic copper backing and shall be FS DD-G-451-C, silvering quality No. 1 float or plate.
   1. Warranty of fifteen (15) years against silver spoilage.

E. Fasteners, Screws, and Bolts shall be hot dipped galvanized, tamper proof.

F. Expansion shields shall be fiber, lead, or rubber as recommended by accessory manufacturer for component and substrate.

G. Concealed backing to comply with local codes and as required for substrate conditions; or manufacturer's standard mounting kits.

2.3 WASHROOM EQUIPMENT

A. Soap Dispenser - Shall be surfaced mounted and provided at each lavatory. **Contractor to install** Model No. Symmetry B.9010001.

B. Mirrors- 24 inches x 36 inches surface mounted, Model No. B-290. Locations as shown on drawings. Mirrors should be located away from sink (unbreakable with Stainless Steel frames)

C. Toilet Paper Dispensers – shall be surface mounted and located at each water closet. The contractor will provide Stainless Steel with spindle, **submit Model for approval by Architect.**

D. Grab Bars – shall be 1 – ½ inch diameter satin finish stainless steel with a 1-1/2 inch clearance between rail and wall. Attach bars with concealed mounting and parallel to the floor at each accessible stall with one 36 inch behind toilet and one 42 inch long bar at side of toilet. Refer to drawings. Model No. B-6806.

E. Sanitary Napkin Dispenser – shall be surface mounted in each women's toilet room with single coin/double coin-(25/50 cents) operation and capacity of 20 Napkins / 30 Tampons. Model No. B2706.

F. Mop and Broom Holder - shall be surface mounted with a capacity of four (4) hooks and three (3) mop holders and be located above mop sinks at each custodial room. Model No. B-239x 34. Refer to drawings for locations if any.

G. Clothes Hooks- shall be surface mounted and one should be located at each single toilet room inside the door and at each shower location if not included in partition package. Model No. B-6717 or equivalent.

H. Paper Towel Dispenser/ Trash Receptacle Combination – Shall be surface mounted. Model No. B-3949.

I. Roll Paper Towel Dispensers- The Contractor to install Model No. SCA 5510282.

J. Electric Hand Dryers- RE: electrical specifications. Should be high speed, energy efficient electric hand dryers and internally grounded. Require 5 year warranty. Operational sound shall be less than 80 dB. Motor and blower 5/8 HP, 20,000 RPM. Air flow rate: 19,000 linear feet per minute. The controls should be completely sealed with automatic operations activated by infrared sensors. The unit should be recessed in an ADA compliant 22 GA 304 Stainless steel #4 finish mount. The mounting kit should be all welded construction measuring 16-3/8" wide x 26" high x 3-3/8" deep.

K. Underlavatory Guard

1. Description: Insulating pipe coverings for supply and drain piping assemblies, which prevent direct contact with and burns from piping, and allow service access without removing coverings.

2.4 MATERIALS AND FINISHING

A. Stainless Steel: ASTM A 666, Type 304, No. 4 finish (satin), 0.0312-inch (0.8-mm) minimum nominal thickness unless otherwise indicated.

B. Brass: ASTM B 19, ASTM B 16 (ASTM B 16M), or ASTM B 30.

C. Aluminum: ASTM B 221 (ASTM B 221M), Alloy 6063-T6 or 6463-T6.

D. Sheet Steel: ASTM A 1008/A 1008M, 0.0359-inch (0.9-mm) minimum nominal thickness.

E. Galvanized-Steel Sheet: ASTM A 653/A 653M, G60 (Z180).

F. Chromium Plating: ASTM B 456, Service Condition Number SC 2 (moderate service).

G. Baked-Enamel Finish: Factory-applied, gloss-white, baked-acrylic-enamel coating.

H. Tempered Glass: ASTM C 1048, Kind FT (fully tempered).

I. Mirrors: ASTM C 1503, Mirror Glazing Quality, clear-glass mirrors, nominal 6.0 mm thick.

J. Galvanized-Steel Mounting Devices: ASTM A 153/A 153M, hot-dip galvanized after fabrication.

K. Fasteners: Screws, bolts, and other devices of same material as accessory unit, tamper and theft resistant when exposed, and of galvanized steel when concealed.

L. Keys: Provide universal keys for internal access to accessories for servicing and resupplying. Provide minimum of **six (6)** keys to Owner's representative.

M. FINISHING
1. Baked Enamel Coatings require pretreating to clean condition, application of one coat primer and minimum two coats vitreous enamel.
2. Chrome / Nickel Plating should have a satin finish.
3. Shop Primed Ferrous Metals requires pretreating, spray apply one coat primer and bake.
4. Back paint components where contact is make with building finishes to prevent electrolysis.

PART 3 - EXECUTION

3.1 INSTALLATION

A. Install accessories using fasteners appropriate to substrate indicated and recommended by unit manufacturer. Install units level, plumb, and firmly anchored in locations and at heights indicated.

1. Install grab bars to withstand a downward load of at least 250 lbf , when tested according to method in ASTM F 446.

B. Adjust accessories for unencumbered, smooth operation and verify that mechanisms function properly. Replace damaged or defective items. Remove temporary labels and protective coatings.

C. Comply with ADA and TAS requirements for mounting locations. Refer to drawings. When not shown, submit supplier's recommendations for locations and mounting height before proceeding.

D. Contractor shall be responsible for supplying all opening, blocking, and other components necessary for installation of all toilet accessories.

E. Use approved theft-resistant type fasteners.

END OF SECTION 102800

SECTION 123640 – SOLID SURFACING COUNTERTOPS

PART 1 - GENERAL

1.1 RELATED DOCUMENTS
- A. Drawings and general provisions of the Contract, including General and Supplementary Conditions and Division 01 Specification Sections, apply to this Section.

1.2 SUMMARY
- A. Section includes Solid surface material countertops, backsplashes, end splashes, apron fronts, and sinks.

1.3 ACTION SUBMITTALS
- A. Product Data: For each countertop and sink materials.
- B. Sustainable Documentation Submittals:
  1. Recycled Content:
     a. Product data and certification letter indicating percentages by weight of post-consumer and pre-consumer recycled content for products having recycled content.
     b. Include statement indicating costs for each product having recycled content.
  2. Regional Material:
     a. Product data for regional materials (within 500 miles of construction site) indicating location and distance from Project of material manufacturer and point of extraction, harvest, or recovery for each raw material.
     b. Include statement indicating cost for each regional material and the fraction by weight that is considered regional.
     c. For metal products, provide statement from manufacturer indicating location for scrap collection and other recycled materials include in the product and it's distance from the project site.
  3. VOC content data. Provide for any adhesives, sealants, paints, or coatings used on the interior of the building.
     a. Product information or statement from manufacturer indicating the VOC content of the product in grams per liter (g/L).
- C. Shop Drawings: Include plans, sections, details, and attachments to other work.
  1. Show locations and details of joints.
  2. Show direction of veining, grain, or other directional patterns, if any.
- D. Samples for Verification:
  1. For each stone type indicated, in sets of Samples not less than 12 inches (300 mm) square. Include two or more Samples in each set and show the full range of variations in appearance characteristics expected in completed Work.
  2. For each type of material exposed to view.

1.4 INFORMATIONAL SUBMITTALS
- A. Qualification Data: For fabricator.
- B. Material Test Reports:
  1. Stone Test Reports: For each stone variety proposed for use on Project, by a qualified testing agency, indicating compliance with required physical properties, according to referenced ASTM standards. Base reports on testing done within previous three years.
  2. Sealant Compatibility and Adhesion Test Report: From sealant manufacturer indicating that sealants will not stain or damage stone.

1.5 CLOSEOUT SUBMITTALS
- A. Maintenance Data: For countertops to include in maintenance manuals. Include product data for care products used or recommended by Installer, and names, addresses, and telephone numbers of local sources for products.

1.6 QUALITY ASSURANCE
- A. Fabricator Qualifications: Shop that employs skilled workers who custom-fabricate countertops similar to that required for this Project, and whose products have a record of successful in-service performance.
- B. Installer Qualifications: Fabricator of countertops.

C. Mockup: Build mockup to demonstrate aesthetic effects and to set quality standards for fabrication and execution.
   1. Build mockup of typical countertop as indicated on Drawings.
   2. Subject to compliance with requirements, approved mockup may become part of the completed Work if undisturbed at time of Substantial Completion.

1.7 PRECONSTRUCTION TESTING

A. Preconstruction Sealant Adhesion and Compatibility Testing: Submit to joint-sealant manufacturers, for compatibility and adhesion testing according to sealant manufacturer's standard testing methods and Section 079200 "Joint Sealants," Samples of materials that will contact or affect joint sealants.

1.8 DELIVERY, STORAGE, AND HANDLING

A. Store and handle materials to prevent deterioration or damage due to moisture, temperature changes, contaminants, corrosion, breaking, chipping, and other causes.
   1. Lift stone with wide-belt slings; do not use wire rope or ropes that might cause staining. Move stone, if required, using dollies with cushioned wood supports.
   2. Store stone on wood A-frames or pallets with non-staining, waterproof covers. Arrange to distribute weight evenly and to prevent damage to stone. Ventilate under covers to prevent condensation.

1.9 FIELD CONDITIONS

A. Field Measurements: Verify dimensions of construction to receive countertops by field measurements before fabrication and indicate measurements on Shop Drawings.

PART 2 - PRODUCTS

2.1 SOLID SURFACE COUNTERTOP MATERIALS

A. Solid Surface Material: Stainless steel.

.

2.2 MANUFACTURERS

A. Source Limitations for Stone: Obtain stone, regardless of finish, from a single quarry with resources to provide materials of consistent quality in appearance and physical properties.
   1. For stone types that include same list of varieties and sources, provide same variety from same source for each.
   2. Make stone slabs available for examination by Architect.
      a. Mark and photograph aesthetically unacceptable portions of slabs as directed by Architect.

2.3 GRANITE

A. Material Standard: Comply with ASTM C 615.
B. Description: Uniform, fine to medium-grained, stone without veining.
C. Varieties and Sources: Subject to compliance with requirements, provide the following: As scheduled.
D. Cut stone from contiguous, matched slabs in which natural markings occur.
E. Finish: As indicated.
F. Color and Pattern: As scheduled.

2.4 MARBLE

A. Material Standard: Comply with ASTM C 503[, Classification I Calcite] [, Classification II Dolomite] [, Group A] [, Group B] [, Group C] [, Group D].
   1. Stone Abrasion Resistance: Minimum value of 10, based on testing according to ASTM C 241/C 241M or ASTM C 1353.
B. Description: Uniform, fine- to medium-grained, white stone with only slight veining.
C. Varieties and Sources: Subject to compliance with requirements, provide the following: As scheduled.

2.5 ADHESIVES, GROUT, SEALANTS, AND STONE ACCESSORIES

A. General: Use only adhesives formulated for stone and ceramic tile and that are recommended by their manufacturer for the application indicated.
B. Water-Cleanable Epoxy Adhesive: ANSI A118.3, with a VOC content in accordance with Section 018113.
   1. Manufacturers: Subject to compliance with requirements, available manufacturers offering products that may be incorporated into the Work include, but are not limited to, the following:
      a. Bonsal, W. R. Company.
      b. Custom Building Products.
      c. Laticrete International, Inc.

d. MAPEI Corporation.

C. Water-Cleanable Epoxy Grout: ANSI A118.3, chemical-resistant, water-cleanable, tile-setting and -grouting epoxy.
1. Manufacturers: Subject to compliance with requirements, provide products by one of the following:
a. Bonsal, W. R. Company.
b. Bostik, Inc.
c. Custom Building Products.
d. Laticrete International, Inc.
e. MAPEI Corporation.

D. Stone Adhesive: Two-part epoxy adhesive, formulated specifically for bonding stone to stone, with an initial set time of not more than two hours at 70 deg F (21 deg C).
1. Color: Clear.
2. Products: Subject to compliance with requirements, provide one of the following:
a. Epoxy Adhesive:
1) Akemi North America; Akepox.
2) Axson North America, Inc; Akabond Epoxy.
3) Bonstone Materials Corporation; Touchstone Ratio Pac Clear Gel Epoxy.

E. Sealant for Countertops: Manufacturer's standard sealant of characteristics indicated below that complies with applicable requirements in Section 079200 "Joint Sealants" and will not stain the stone it is applied to.
1. Mildew-Resistant Joint Sealant: Mildew resistant, single component, nonsag, neutral curing, silicone.
2. Color: As selected by Architect from manufacturer's full range.

F. Stone Cleaner: Specifically formulated for stone types, finishes, and applications indicated, as recommended by stone producer and, if a sealer is specified, by sealer manufacturer. Do not use cleaning compounds containing acids, caustics, harsh fillers, or abrasives.

G. Stone Sealer: Colorless, stain-resistant sealer that does not affect color or physical properties of stone surfaces, as recommended by stone producer for application indicated.
1. Manufacturers: Subject to compliance with requirements, provide products by one of the following:
a. Bostik, Inc.
b. Hillyard, Inc.
c. Miracle Sealants Company.

2.6 FABRICATION, GENERAL

A. Fabricate countertops according to solid surface material manufacturer’s written instructions.

2.7 STONE FABRICATION, GENERAL

A. Select stone for intended use to prevent fabricated units from containing cracks, seams, and starts that could impair structural integrity or function.
1. Repairs that are characteristic of the varieties specified are acceptable provided they do not impair structural integrity or function and are not aesthetically unpleasing, as judged by Architect.

B. Grade and mark stone for final locations to produce assembled countertop units with an overall uniform appearance.

C. Fabricate stone countertops in sizes and shapes required to comply with requirements indicated.
1. For granite, comply with recommendations in NBGQA's "Specifications for Architectural Granite."
2. For marble, comply with recommendations in MIA's "Dimension Stone - Design Manual VI."
3. Clean sawed backs of stones to remove rust stains and iron particles.
4. Dress joints straight and at right angle to face unless otherwise indicated.
5. Cut and drill sinkages and holes in stone for anchors, supports, and attachments.
6. Provide openings, reveals, and similar features as needed to accommodate adjacent work.
7. Fabricate molded edges with machines having abrasive shaping wheels made to reverse contour of edge profile to produce uniform shape throughout entire length of edge and with precisely formed arris slightly eased to prevent snipping, and matched at joints between units. Form corners of molded edges as indicated with outside corners slightly eased unless otherwise indicated.
8. Finish exposed faces of stone to comply with requirements indicated for finish of each stone type required and to match approved Samples and mockups. Provide matching finish on exposed edges of countertops, splashes, and cutouts.

D. Carefully inspect finished stone units at fabrication plant for compliance with requirements for appearance, material, and fabrication. Replace defective units.

1.1 STONE COUNTERTOPS

E. General: Comply with recommendations in MIA's "Dimension Stone - Design Manual VI."

F. Nominal Thickness: Provide thickness indicated, but not less than 1-1/4 inches (32 mm). Gage backs to provide units of identical thickness.
G. Edge Detail: As indicated.
H. Splashes: Provide 3/4-inch- (20-mm-) thick backsplashes and end splashes unless otherwise indicated.
   1. Height: As indicated.
   2. Top-Edge Detail: As indicated.
I. Joints: Fabricate countertops in sections for joining in field, with joints at locations indicated and as follows:
   1. Bonded Joints: 1/32 inch (0.8 mm) or less in width.
   2. Grouted Joints: 1/16 inch (1.5 mm) in width.
   3. Sealant-Filled Joints: 1/16 inch (1.5 mm) in width.
J. Cutouts and Holes:
   1. Undercounter Fixtures: Make cutouts for undercounter fixtures in shop using template or pattern furnished by fixture manufacturer. Form cutouts to smooth, even curves.
      a. Provide vertical edges, slightly eased at juncture of cutout edges with top and bottom surfaces of countertop and projecting 3/16 inch (5 mm) into fixture opening.
   2. Counter-Mounted Fixtures: Prepare countertops in shop for field cutting openings for counter-mounted fixtures. Mark tops for cutouts and drill holes at corners of cutout locations. Make corner holes of largest radius practical.
   3. Fittings: Drill countertops in shop for plumbing fittings, undercounter soap dispensers, and similar items.

PART 3 - EXECUTION

3.1 EXAMINATION
A. Examine substrates to receive stone countertops and conditions under which stone countertops will be installed, with Installer present, for compliance with requirements for installation tolerances and other conditions affecting performance of stone countertops.
B. Prepare written report, endorsed by Installer, listing conditions detrimental to performance of stone countertops.
C. Proceed with installation only after unsatisfactory conditions have been corrected.

3.2 PREPARATION
A. Advise installers of other work about specific requirements for placement of inserts and similar items to be used by stone countertop Installer for anchoring stone countertops. Furnish installers of other work with Drawings or templates showing locations of these items.
B. Before installing stone countertops, clean dirty or stained stone surfaces by removing soil, stains, and foreign materials. Clean stone by thoroughly scrubbing with fiber brushes and then drenching with clear water. Use only mild cleaning compounds that contain no caustic or harsh materials or abrasives. Allow stone to dry before installing.

3.3 CONSTRUCTION TOLERANCES
A. Variation from Level: Do not exceed 1/8 inch in 96 inches (3 mm in 2400 mm), 1/4 inch (6 mm) maximum.
B. Variation in Joint Width: Do not vary joint thickness more than one-fourth of nominal joint width.
C. Variation in Plane at Joints (Lipping): Do not exceed 1/64-inch (0.4-mm) difference between planes of adjacent units.
D. Variation in Line of Edge at Joints (Lipping): Do not exceed 1/64-inch (0.4-mm) difference between edges of adjacent units, where edge line continues across joint.

3.4 INSTALLATION OF COUNTERTOPS
A. General: Install countertops over plywood subtops with full spread of water-cleanable epoxy adhesive.
B. Do necessary field cutting as stone is set. Use power saws with diamond blades to cut stone. Cut lines straight, true, and at right angles to finished surfaces unless beveling is required for clearance. Ease edges slightly to prevent snipping.
C. Set stone to comply with requirements indicated. Shim and adjust stone to locations indicated, with uniform joints of widths indicated and with edges and faces aligned according to established relationships and indicated tolerances. Install anchors and other attachments indicated or necessary to secure stone countertops in place.

D. Space joints with 1/16-inch (1.5-mm) gap for filling with grout or sealant. Use temporary shims to ensure uniform spacing.
   1. Clamp units to temporary bracing, supports, or each other to ensure that countertops are properly aligned and joints are of specified width.

E. Complete cutouts not finished in shop. Mask areas of countertops adjacent to cutouts to prevent damage while cutting. Use power saws with diamond blades to cut stone. Make cutouts to accurately fit items to be installed, and at right angles to finished surfaces unless beveling is required for clearance. Ease edges slightly to prevent snipping.

F. Install backsplashes and end splashes by adhering to wall with water-cleanable epoxy adhesive and to countertops with stone adhesive. Mask areas of countertops and splashes adjacent to joints to prevent adhesive smears.

G. Grout joints to comply with ANSI A108.10. Remove temporary shims before grouting. Tool grout uniformly and smoothly with plastic tool.

H. Apply sealant to joints; comply with Section 079200 "Joint Sealants." Remove temporary shims before applying sealant.

3.5 ADJUSTING AND CLEANING

A. In-Progress Cleaning: Clean countertops as work progresses. Remove adhesive, grout, mortar, and sealant smears immediately.

B. Remove and replace stone countertops of the following description:
   1. Broken, chipped, stained, or otherwise damaged stone. Stone may be repaired if methods and results are approved by Architect.
   2. Defective countertops.
   3. Defective joints, including misaligned joints.
   4. Interior stone countertops and joints not matching approved Samples and mockups.
   5. Interior stone countertops not complying with other requirements indicated.

C. Replace in a manner that results in stone countertops matching approved Samples and mockups, complying with other requirements, and showing no evidence of replacement.

D. Clean stone countertops no fewer than six days after completion of sealant installation, using clean water and soft rags. Do not use wire brushes, acid-type cleaning agents, cleaning compounds with caustic or harsh fillers, or other materials or methods that could damage stone.

E. Sealer Application: Apply stone sealer to comply with stone producer's and sealer manufacturer's written instructions.

END OF SECTION 123640

SECTION 124000 – WOOD BURNING FIREPLACE

PART 1 - GENERAL

1.1 RELATED DOCUMENTS

A. Drawings and general provisions of the Contract, including General and Supplementary Conditions and Division 01 Specification Sections, apply to this Section.

1.2 SUMMARY

A. Section Includes:

1. Acucraft Wood Burning Fireplace.

1.3 PREINSTALLATION MEETINGS

A. Preinstallation Conference: Conduct conference at project site, 630 Charlie Roberts Lane, Kendleton, Texas 77451.

1.4 ACTION SUBMITTALS

A. Product Data: For each type of product.

1. Include construction details, material descriptions, dimensions of individual components and profiles, and finishes for Acucraft wood burning fireplace. Include furnished specialties and accessories.

B. Shop Drawings: For Acucraft wood burning fireplace.

1. Include plans, elevations, sections, and attachment details.

1.5 CLOSEOUT SUBMITTALS

A. Maintenance Data: For Acucraft wood burning fireplace to include in maintenance manuals.

PART 2 - PRODUCTS

2.1 MANUFACTURERS

A. Source Limitations: Obtain wood burning fireplace from Acucraft (manufacturer). See Drawings and the following manufacturer cut sheets.

PART 3 - EXECUTION

3.1 EXAMINATION

A. Examine walls, with Installer present, for compliance with requirements for installation tolerances, surface conditions of wall, and other conditions affecting performance of the Work.

B. Examine walls and partitions for proper backing.

C. Examine walls and partitions for suitable framing depth if recessed units will be installed.

D. Proceed with installation only after unsatisfactory conditions have been corrected.

3.2 INSTALLATION

A. General: Install fireplace in location as indicated on Drawings. Keep perimeter lines straight, level, and plumb. Provide grounds, clips, backing materials, adhesives, brackets, anchors, trim, and accessories necessary for complete installation.

B. Comply with manufacturer’s requirements.

END OF SECTION 124000

The LARGEST UL-Listed Wood Fireplaces Available

The Hearthroom Series boast the largest viewing areas: 36″, 44″ and 48″ in single-sided, see-through and indoor/outdoor. **Our American Series provide a classic, tall viewing area** with a single swing-door to maximize your view, and is available in single-sided or indoor outdoor (see through) styles. We use the highest quality materials and components for all of our fireplaces, which are backed by the industry's best Lifetime Warranty.

UL Wood Burning F
Benefits

- Our American and Hearthro
  tested and listed to UL-127 (
  (Canada)
- Largest wood fireplaces on t
- Enjoy supplemental warmth
  fireplaces
- 100% outside air for combus
- Choose from single-sided, s
  styles

Inspiration to Get You

- Wood Fireplace Ideas for th
- Innovative Designs for Cont
- Best Wood Burning Fireplac
- 6 Different Types of Wood B

REQUEST A FREE QUOT

Trust Acucraft with your wood-burning fireplace project and enjoy the fireplace of your dreams!

Go Big or Go Home with a Wood-Burning Fireplace.

Our fireplaces are never mass-produced. Each fireplace is built for a specific customer to meet their needs and desires. Our Fireplace Advisors will work one-on-one with you to find fireplace for your space.

Not only are these large wood fireplaces tested and listed to UL-127, CAN/ULC-S610 for use in the United States and Canada, but our Hearthroom Series can also be used with mult wood fireplace one day, and keep it mess-free with a gas logset the next with a Hearthroom fireplace! Only at Acucraft.

Browse Acucraft's UL-Listed Wood Fireplace Collections:

The AMERICAN Series

The HEARTHROOM Series

Top 10 Tips for Planning a Wood-Burning Fireplace

Are you considering adding a wood-burning fireplace to your home? Whether you prefer a modern aesthetic or something more traditional, a fireplace is more than just a heating e can transform any room into a cozy, inviting space. It's the perfect backdrop for gatherings, where friends and family can come together, relax, and create lasting memories. With a available, you can find the ideal fireplace to complement your home's décor and your personal taste.

Read our tips for planning the perfect wood fireplace for your home!

The American: Features & Benefits

TESTING: Acucraft's American series of UL-127 / ULC-S610 listed wood fireplaces are designed to maximize your viewing area and enjoy supplemental heat.

DOOR OPTIONS: The American fireplaces are designed to operate with the fireplace door closed, open, or completely removed. Included with every American fireplace is a built-in c reversible swing door for right or left-hand operation.

FIREPLACE STYLES: Available in front-facing (single sided) or indoor outdoor (see through) styles.

READY TO GO: Designed to fly through manufacturing and get to your site in as little as 6 weeks.

Click Here to view our American fireplace photo gallery.

Looking for specifications? Click Here to access our spec library.

Hearthroom: Large Wood Burning Fireplaces Features & Benefits

TESTING: Acucraft's Hearthroom series of UL-127 / ULC-S610 listed wood fireplaces are designed with expansive viewing areas and supplemental warmth.

OPEN HEARTH CAPABILITIES: The Hearthroom fireplaces are designed to operate with the fireplace doors closed, open, or completely removed with firescreen for that traditional c

SIZES & STYLES: Available in three sizes: 36″, 44″ and 48″ viewing areas. Choose from Single-Sided, See-Through, or Patent-Pending Indoor/Outdoor. Contact Acucraft for additional

WOOD TO GAS 30-MINUTE CONVERSION: Looking for versatility? No problem! Our Hearthroom fireplaces come standard with a gas knockout so you can easily convert your wood b or propane fueled fireplace with gas logs. Or start with a gas fireplace and effortlessly convert to wood burning.

CHOOSE OPTIONS: From hand painted patina finishes to medieval clavos & strapping, our wood fireplace options ensure your large wood fireplace is unique to you!

Click Here to view our Hearthroom fireplace photo gallery.

Looking for specifications? Click Here to access our spec library.

Contact Us today for a complimentary, no-obligation quote for your dream fireplace. Or, speak with one of our firepla
945-8083.

UL Listed Fireplaces FAQs

What is a UL Listed Fireplace?

What are the benefits of a UL Listed, Hearthroom Series fireplace?

How much does a UL Listed fireplace cost?

Large UL Approved Wood Burning Fireplace Customer Photos

If you'd like to see more, check out our photo gallery.

Hi, I'm Zak, contact me for more information

We co-create every fireplace with every customer, and as the world's leading direct sell manufacturer, we ensure you're getting the exact fireplace you've been dreaming of!

Don't settle for a boring, mass-produced fireplace. Contact us today to start your fireplace journey.

First Name*

Last name*

Phone Number

Email*

Type of Fireplace*

Please Select

The Acucraft Difference

For more than 40 years, Acucraft has been designing, developing, and perfecting the fireplace experience. Our fireplaces are handcrafted and custom built by a team of engineers and craftsmen who are committed to quality and performance. At Acucraft, we create the most unique, distinctive, and highest quality custom gas and wood burning fireplaces in the world. From start to finish and beyond, our team is here for you — any problem, any question, and time. Our team is committed to helping you create your dream fireplace — contact us today and let's start a fire together.

Product Design Content At Your Fingertips!

- Quickly access free high-quality design files and visual tools to move from product discovery to specification.
- Explore our products in real-world projects to get inspired!

Acucraft Fireplace Systems
19672 172nd Street, Big Lake, MN 55309
Email: info@acucraft.com

Copyright 2024 Acucraft Fireplace Systems, LLC. All rights reserved.

SECTION 31 11 00 - CLEARING AND GRUBBING

CONDITIONS OF THE CONTRACT AND DIVISION 1, as applicable, apply to this Section.

PART 1 - GENERAL

1.1 SECTION INCLUDES

A. Protecting and preserving trees and vegetation designated to remain.

B. Clearing of site, including, but not limited to the removal of trees, shrubs, and vegetation which is not designated to remain, and brush, branches, logs, rock, debris, rubbish and other objectionable material from the entire project area.

C. Grubbing of site, including, but not limited to uprooting and removal of all stumps, roots, other organics, etc. to their full depth from the project area and disking to a depth of nine (9) inches.

D. Removal and legal, satisfactory disposal of all material cleared and grubbed from the site.

1.2 PAYMENT

A. No separate measurement or payment will be made for materials and labor performed under this section. Include all costs in the lump sum price.

PART 2 - PRODUCTS

Not Used

PART 3 - EXECUTION

3.1 CONDITIONS AT SITE

A. Execute all work in an orderly and careful manner with due consideration for any and all surrounding areas, planting or structures which are to remain. Periodically, water as required to allay dust and dirt. Protect any adjacent property and improvements from damage and replace any portions damaged through this operation.

B. Coordinate and comply with the following:
   1. Geotechnical Report.
   2. Local ordinances and requirements of authorities having jurisdiction.

C. The Contractor shall take proper precautions to protect adjacent or adjoining property from damage caused by clearing and grubbing activities. All damage shall be repaired or replaced at Contractor's expense.

D. The Contractor shall be responsible for obtaining all permits required by State and local governing agencies.

3.2 DISPOSAL OF MATERIAL

A. All cleared and grubbed material becomes the property of the Contractor and shall legally and satisfactorily be removed and disposed of off-site. **On-site burning will not be permitted**.

3.3 FINAL SITE PREPARATION

A. Remove all rubbish, debris, etc., resulting from Work of this Section from the site.

B. After clearing, grubbing and discing the project site, rake and pick the entire site to remove all debris material.

END OF SECTION 31 11 00

SECTION 31 13 13.13 - WASTE MATERIAL DISPOSAL

CONDITIONS OF THE CONTRACT AND DIVISION 1, as applicable, apply to this Section.

PART 1 - GENERAL

1.1 SCOPE

A. Waste material disposal consists of disposal of trees, brush, vegetation, rubbish and other objectionable matter from operations such as clearing and grubbing, demolition, excavation, concrete placement and grading. Unless otherwise specified, the Contractor is responsible for removal and disposal of waste material.

PART 2 - PRODUCTS

2.1 MATERIALS

A. Specific products are not required. Use equipment and materials necessary to properly complete disposal of waste materials.

PART 3 - EXECUTION

3.1 DISPOSAL AREA

A. Items noted on plans to be "removed" or “disposed” will be taken completely off the site.

B. Concrete wash-out will become property of Contractor to be disposed of with other waste materials.

3.2 COMPACTION AND GRADING

A. Level off waste material to an elevation 12 inches below final grade. Place excess topsoil on waste material in a layer not less than 12 inches thick and compact to the density of the surrounding area.

END OF SECTION 31 13 13.13

SECTION 31 20 00 – EARTHWORK (UNDER PAVING AND SITE APPURTENANCES)

CONDITIONS OF THE CONTRACT AND DIVISION 1, as applicable, apply to this Section.

PART 1 - GENERAL

1.1 SCOPE

A. This section includes the furnishing of all plant, labor, equipment, materials and the performance of all operations required to complete the Earthwork indicated on the Drawings and specified herein, including the following: Clearing and Grubbing, Stripping, Excavation, Embankment, Borrow, Subgrade Preparation, Compaction and Finish Grading.

PART 2 – PRODUCTS

Not Used

PART 3 – EXECUTION

3.1 CLEARING & GRUBBING

A. This item shall consist of clearing the ground of all trees, brush, rubbish, and of grubbing the roadway, pavement areas, roadside ditches and/or outfall ditch right-of-way or other easements as designated within the limits of the project. The designated areas shall be cleared of stumps, brush, logs, rubbish, trees and shrubs, except such trees and shrubs and certain areas designated by the Engineer for preservation shall be carefully protected from abuse, marring or damage during construction operations. Continual parking and/or servicing of equipment under the branches of trees designated for preservation will not be permitted. Trees and shrubs designated for preservation, that must be pruned, shall be trimmed as directed by the Engineer and all exposed cuts over two (2) inches in diameter shall be treated with an approved material.

B. On areas required for paving, channel, or structural excavation, all stumps, roots, etc., shall be removed to a depth of approximately 2-feet below the lower elevation of the excavation. On areas required for embankment construction, all stumps, roots, etc., shall be removed to a depth of approximately 2-feet below the existing ground surface. All holes remaining after clearing and grubbing shall be backfilled and compacted to ninety percent of Standard Proctor Density (ASTM Method D698) at a moisture content of between optimum and plus 3 percent of optimum as directed by the Engineer and the entire area bladed to prevent ponding of water and to provide drainage; except in areas to be immediately excavated, the Engineer may direct that the holes not be backfilled. On areas required for borrow sites and material sources, stumps, roots, etc., shall be removed to the complete extent necessary to prevent such objectionable matter becoming mixed with the material to be used in construction.

C. All cleared and grubbed materials shall be disposed of off site. Contractor shall be responsible for obtaining any necessary disposal permits. The Contractor shall not bury any refuse on site. No burning shall be permitted unless specifically noted and permitted by local jurisdictions.

D. No separate measurement or payment will be made for furnishing all labor, materials, permits, supervision, equipment and supplies required to complete all items of work specified for clearing and grubbing.

3.2 STRIPPING

A. Within the limits indicated, or in areas where existing grade is to be altered either by excavation or embankment, the Contractor shall strip existing topsoil to approximately 3-inches in depth, except that areas beneath foundations or structures shall be stripped to a minimum depth of 6-

inches, and may be stockpiled for future use or disposed of at the Contractor's expense. Stripping shall include the removal and disposal of scrap iron, rubbish, logs, abandoned utilities, signs, and any and all other debris, if within the project site or right-of-way, whether above or below existing grade. Stripping and excavation can take place in the same operation, provided the topmost material is suitable for use in future construction and provided it is not to be set aside for backfill or topsoil. The upper topsoil and debris to be stripped as noted above, shall be removed regardless of whether the site is to be excavated or receive embankment. Surface soil, not suitable for use in the future construction and any other unsatisfactory material shall be excavated, removed off the site and placed in designated spoil banks or shall otherwise be disposed of as directed by the Engineer in such a manner as not to create an unsightly or objectionable condition.

B. Stripping will not be paid for directly. Payment for stripping shall be subsidiary to excavation, borrow or embankment.

3.3 EXCAVATION

A. Excavation shall consist of the required excavation within the project limits, the removal and proper utilization or disposal of all excavated materials; and the constructing, shaping and finishing of all earthwork on the entire project site, in conformity with the required lines, grades and typical cross sections, and in accordance with the specification requirements herein outlined. All suitable excavated materials shall be utilized, insofar as practicable, in grading the site, uniformly widening embankment, flattening slopes, etc., or as directed by the Engineer. The Engineer will define suitable materials. Unsuitable excavation in excess of that needed for construction shall be known as waste and shall become the property of the Contractor to be disposed of by the Contractor outside the limits of the site. Unsuitable material encountered below subgrade elevation, shall be replaced with material from the excavation, or with other suitable material.

B. No separate measurement or payment will be made for materials and labor performed under this section. Include all costs in the lump sum price, including preparing ditches, trimming of slopes, disposal of surplus materials (wastage), preparation and completion of subgrade, shoulders, roadway, any necessary hauling and the furnishing of all labor, tools, equipment and incidentals necessary to complete the work.

3.4 EMBANKMENT

A. This item shall govern for the placement and compaction of all materials obtained from the site, borrow, channels, structural and sewer excavation, including all underground utility excavation, used in the construction of project fill and/or embankment. Prior to placing any embankment, all stripping and/or clearing and grubbing operations shall have been completed on the excavation sources and areas over which the embankment is to be placed. Stump holes or other small excavations in the limits of the embankments shall be backfilled with suitable material and thoroughly compacted by approved methods before commencing embankment construction.

B. Unless otherwise indicated on the plans, the surface of the ground of all unpaved areas, which are to receive embankment, shall be loosened by scarifying or plowing to a depth of not less than 4-inches. The loosened material shall be recompacted with the new embankment as hereinafter specified, and shall not exceed 8-inches in total depth. Where indicated on the plans or as directed by the Engineer, the surface of a hillside to receive embankment shall be loosened by scarifying or plowing to a depth of not less than 4 inches, or cut into steps, benched or notched before embankment materials are placed. The embankment shall then be placed in layers, not to exceed 8-inches, as hereinafter specified, beginning at the low side in part width layers and increasing the widths as the embankment is raised. The material, which has been loosened, shall be recompacted simultaneously with the embankment material placed at the same elevation. Where embankments are to be placed adjacent to or over existing roadbeds, the roadbed slopes

shall be plowed or scarified to a depth of not less than 4-inches and the embankment built up in successive layers, as hereinafter specified to the level of the old roadbed before its height is increased. The top of the old roadbed shall be scarified and recompacted with the next layer of the new embankment. The total depth of the scarified and added material shall not exceed the permissible depth of layer.

C. Trees, stumps, roots, vegetation or other unsuitable materials shall not be placed in the embankment.

D. Except as otherwise required by the plans, all embankment shall be constructed in layers approximately parallel to the finished grade of the site or paving. Embankments shall be constructed to the grade established by the Engineer, and completed embankments shall correspond to the general shape of the typical sections shown on the plans and each section of the embankment shall correspond to the detailed section or slopes established by the Engineer. After completion, the site shall be continuously maintained to its finished section and grade until the project is completed.

E. No material placed in the embankment by dumping in a pile or windrow shall be incorporated in a layer in that position, but all such piles or windrows shall be moved by blading or similar methods. Clods or lumps of material shall be broken and the embankment material mixed by blading, harrowing, discing, or similar methods to the end that a uniform material is secured in each layer. Water required for sprinkling to bring the material to the moisture content necessary for maximum compaction shall be evenly applied and it shall be the responsibility of the Contractor to secure uniform moisture content throughout the layer by such methods as may be necessary.

F. After each layer of embankment or select material is complete, the Engineer will make tests as necessary. If the material fails to meet the density specified, the course shall be reworked, as necessary, to obtain the specified compaction. Should the subgrade, due to any reason or cause, lose the required stability, density or finish before the pavement is placed, it shall be recompacted and refinished at the sole expense of the Contractor. Excessive loss of moisture in the subgrade shall be prevented by sprinkling, sealing or covering with a subsequent layer of asphaltic or other approved material. Embankment shall not be paid for directly, but shall be incidental to site excavation, channel excavation, construction of underground utilities, including all sewers, or borrow.

3.5 BORROW

A. Borrow shall consist of the required excavation, removal and proper utilization of materials secured from sources obtained by the Contractor and approved by the Engineer. Borrow shall be used only when shown on the bid form or directed by the Engineer and then only from approved sources. Borrow material shall come only from sources approved by the Engineer. The Engineer shall provide samples of the fill material for testing and approval. In the event the material is not acceptable, as determined by the Engineer, the Contractor shall find other sources. All fill material shall be free from organic matter and deleterious material.

B. No separate measurement or payment will be made for materials and labor performed under this section. Include all costs in the lump sum price. All work performed as required herein shall be full compensation for furnishing all labor, for all materials, for all royalties and freight involved, for all hauling, delivery, spreading and compacting complete and in place and for all tools, equipment and incidentals necessary to complete the work.

3.6 SUBGRADE

A. The subgrade shall be brought to the lines, grades and typical cross section shown on the plans and in accordance with these specifications. Whenever unsuitable natural material is encountered and cannot be handled by the excavation or embankment requirements, then the

following requirements shall apply. The unsuitable material shall be excavated to a depth deemed sufficient by the Engineer and the excavated material shall be disposed of off the jobsite at the expense of the Contractor. The excavated area shall be filled to its original level with suitable material meeting the requirements of borrow. This imported material shall be compacted to 95- percent of standard proctor density, (ASTM Method D698) using a moisture content ranging from optimum to plus 3-percent above optimum. Soils shall not be compacted at less than the optimum moisture content.

B. After all holes and depressions are filled with approved material, the subgrade shall be brought up to the lines and grades required and if it is not to be stabilized, it shall be compacted to 95- percent of standard proctor density, (ASTM Method D698), using a moisture content ranging from optimum to plus 3-percent above optimum. The subgrade, without stabilization, shall be compacted to a depth of 9-inches. The subgrade shall be kept free from all ruts and weak spots. Any ruts and weak spots that develop under traffic shall be repaired with suitable material as they develop.

3.7 COMPACTION

A. All fill material shall be placed in uniform layers, dried or moistened as required to obtain approximate optimum moisture content and rolled to a density of at least 95 percent of maximum density at optimum moisture as determined by ASTM D-698. Compaction equipment shall be as hereinafter specified. The maximum thickness of uniform layers (loose measurements) shall be as follows:
   1. If the Contractor elects to use a pneumatic tired roller, the thickness of each uniform layer shall not exceed six (6) inches.
   2. If the Contractor elects to use sheepsfoot rollers, the thickness of each uniform layer shall not exceed eight (8) inches.
   3. In locations where it is impractical to use the roller equipment, mechanical hand tampers will be used and the thickness of each uniform layer shall not exceed four (4) inches. The method used to secure the optimum moisture content will be the Contractor's responsibility. The compacting equipment and the method of compaction shall be such that a uniform density will be obtained over the entire area and depth of material being compacted. All fill material deposited in place by means of scrapers, dump trucks, draglines or other similar equipment shall be thoroughly broken up before being spread into the uniform layers. Rolling shall start longitudinally at the sides and proceed toward the center of the crowned sections or start longitudinally at the low side and proceed toward the high side of sloped areas, overlapping on successive trips by at least one-half (1/2) the width of the roller unit. Alternate trips of the roller shall be slightly different in length.

B. Excess loss of moisture shall be construed to exist when the soil moisture content is three (3) percent less than optimum moisture.

C. An independent qualified Testing Laboratory either selected by or approved by the Owner or Engineer, for every 500 square yards of the compacted subgrade shall take density tests. The Testing Laboratory will furnish written reports covering results of all tests and inspections made. Reports will be made promptly to the Engineer, Contractor and Owner.

3.8 FINISH GRADING

A. Uniformly smooth grade all areas indicated on the drawings to be graded. The finish surface shall be not more than 0.05 feet above or below the established grade or approved cross section. All ditches and swales shall be properly graded so as to drain readily. Where existing grade is disturbed by the Contractor in areas not marked to be graded, the Contractor will regrade the disturbed area to its original grade at no additional expense to the Owner.

END OF SECTION 31 20 00

SECTION 31 23 00 - CONSTRUCTION OF UNDERGROUND UTILITIES

CONDITIONS OF THE CONTRACT AND DIVISION 1, as applicable, apply to this Section.

PART 1 – GENERAL

1.1 SUMMARY

A. This Section shall govern for all excavation required for the construction of sewers, sewer structures, pipe culverts, appurtenances and connections and for the backfilling around completed sewers to the level of the original ground, all in conformity with the locations, lines and grades shown on the plans or as given by the Engineer and in accordance with these specifications. This Section shall also govern for any necessary pumping or bailing and drainage and all sheathing and bracing of trench walls. Also governed by this Section are the cutting and restoration of pavement and base courses, the furnishing and placing of cement stabilized backfill, the hauling and disposing of surplus materials and the bridging of trenches and other provisions for maintenance of traffic or access as provided herein.

1.2 QUALITY ASSURANCE

A. The Testing Laboratory's representative will determine the moisture density relationship in accordance with ASTM D698 on material secured from the trench excavation. Samples secured from the cement stabilized sand supplier shall be blended with Portland cement in accordance with Section 31 23 23.16 - Cement Stabilized Sand Bedding and Backfill, and the moisture density relationship will be determined in accordance with ASTM D558.

B. The Testing Laboratory's representative will determine the in place density in accordance with ASTM Methods D2922 or D1556. The minimum level of testing will consist of at least one test for each 200 linear feet of trench per lift of backfill.

C. At the completion of the project, all on site storm and sanitary sewer lines shall be cleaned out using a hydraulic jet machine in the presence of the owner and engineer. After hydro-jetting storm and sanitary sewer lines, all segments shall be video tape recorded and tapes shall be furnished to the owner.

1.3 REQUIRED INSPECTIONS

A. The contractor is solely responsible for meeting with all inspecting authorities having jurisdiction over the project (to include, but not limited to: MUD District, City, County, State and Federal) prior to construction. All required inspections shall be coordinated by the contractor prior to installation of the WORK. All WORK found to be deficient by the inspector(s) and WORK installed prior to notification of inspector(s) shall be removed and replaced at the contractor's sole expense.

PART 2 – PRODUCTS

2.1 CONNECTIONS TO BUILDING GRAVITY SEWERS

A. Connections to building gravity sewers, to include roof drains and sanitary sewer connections shall be made with SCH 40 X SDR adapter couplings.

B. Fernco couplers are not allowed.

PART 3 – EXECUTION

3.1 EXCAVATION & TRENCH PREPARATION

A. Excavate trench to the alignment and depth required. Brace the trench and drain, as required, so that the work may be accomplished safely and efficiently. If necessary, install a dewatering system to provide a dry trench bottom. Pumps shall discharge into natural drainage channels or to drains. Shoring for excavations and trenches shall meet the requirements of the latest edition of OSHA Regulation 1926, Subpart P.

B. For pipes less than 30 inches in diameter, the minimum width of the trench shall be the width of the outside barrel of the pipe plus 24 inches, the maximum width of the trench shall be the width of the outside barrel of the pipe plus 36 inches. For pipe 30 inches and larger, the minimum trench width shall be the width of the outside barrel of the pipe plus 32 inches, and the maximum width of the trench shall be the width of the outside barrel of the pipe plus 36 inches.

C. Side sloping or benching of the trench, where permitted, will begin at one foot above the top of the pipe and will not encroach upon private property or endanger existing or future structures or underground utilities. Depth of trench, without sheathing or bracing shall comply with OSHA Regulation 1926.650.

D. The full width of the trench shall be excavated to a depth below the invert elevation of the pipe so as to permit placing the bedding material specified on the attached drawings below the outside bottom of the pipe. Any additional depth excavated by the Contractor shall be replaced with an equal depth of cement-stabilized sand. The cost of this additional material, in place shall be at the expense of the Contractor.

E. Where necessary, excavations shall have sheathing and bracing to prevent caving. At these locations, increase the trench width as required and leave the sheathing in place until the pipe has been laid and the backfill compacted to a depth of 2 feet over the pipe. All sheathing and bracing shall be designed to the requirements of OSHA Standard 1926, Subpart P (latest edition).

F. Sewers shall not be constructed or sewer pipe laid in the presence of water. All water shall be removed from the excavation sufficiently prior to the sewer placing operation to ensure a dry, firm bed on which to place the sewer and shall be maintained in such unwatered condition until all concrete and mortar is set. Removal of water may be accomplished by bailing, pumping or by a well-point system as conditions warrant. There will be no separate pay for well pointing without the prior approval of the Engineer. Contractor shall include in base proposal all costs associated with de-watering, well pointing, stabilizing, etc. necessary to install all underground utilities.

G. In the event that the excavation cannot be dewatered to the point where the pipe subgrade is free of mud, excessive wet soil, sand silt or clay with water, a seal slab shall be used in the bottom of the excavation. Such seal slab shall consist of a lean concrete mixture. The seal slab shall be a Class “D”, 5 sacks of cement per cubic yard with a minimum compressive strength of 1,750 P.S.I. at 7 days and 2,500 P.S.I. at 28 days. A precast seal slab may be used, provided that the joints of the seal slab do not occur at the joint of the pipe. Contractor shall have an option of using a three- day cylinder break test at no expense to the Owner.

H. For unstable conditions requiring outside forms, seals, sheathing, and bracing, or where groundwater is encountered, any additional excavation in width and backfill required shall be done at the Contractor’s expense. Portable trench boxes may be used in lieu of sheathing upon approval in writing by the Engineer. The trench box must be in accordance with OSHA Regulation 1926.650 (latest edition).

I. Use of the trench box does not relieve the Contractor of any liability for damages to person or property. When a trench box is moved, the jointed pipe or in-place backfill shall not be disturbed.

J. All materials from excavation operations not required for backfilling, if considered suitable shall be placed in embankments or wasted, in accordance with Section 31 20 00 - Earthwork. All material not suitable for use in embankments will be declared surplus by the Engineer and shall become the responsibility of the Contractor to dispose of as he wishes. Such surplus material shall be promptly removed from the work following the completion of the portion of the sewer involved. No separate payment shall be made for disposal of this surplus material.

K. Unless otherwise specifically approved, Contractor shall use ladder or wheel-type trench-digging machinery, except where hand methods must be employed to avoid damage to existing structures above or below ground, or where hand excavation is indicated.

L. Engineer may limit the amount of trench opened or partially opened at any time in advance of the completed pipe laying operation and the amount of trench left unfilled. Open no more than 500 feet of trench at any one time.

3.2 PIPE LAYING

A. No pipe shall be laid in water or when the trench conditions or weather is unsuitable for such work, unless specifically approved by the Engineer.

B. Non-pressure concrete pipe shall be laid with the ends abutting and true to line and grade. Fit and lay the pipe to form a smooth and uniform invert. Laying of pipe shall commence at the lowest point, so that the spigot ends point in the direction of flow. Lay cast iron pipe on firm earthen foundation with bell ends facing the direction of laying.

C. All other types of pipe shall be laid in accordance with the applicable provisions of this specification, in accordance with the Special Provisions preceding this Subsection, or with the manufacturer's recommendations.

D. Cut cast iron pipe with wheel-type cutters or cold chisel. Flame cutting of cast iron pipe is not allowed. Make cuts in a neat and workmanlike manner without damage to pipe and so as to leave a smooth end at right angles to axis of pipe. Field cutting of Polyvinyl Chloride shall be in accordance with the pipe manufacturer's recommendations.

E. Minor deflections may be obtained in pipe joints. Contractor must obtain approval when the degree of deflection is necessary to deflect from a straight line. Where necessary to make major deflections in concrete pipe, use sections of pipe with beveled ends for deflections not greater than five degrees. For deflections greater than five degrees, use fabricated fittings for concrete pressure pipe and use cast iron fittings for cast iron pipe.

F. When the pipe laying operation is halted, seal the open end of the pipe with a temporary plug. Plug is to remain in place until the pipe laying operation re-commences. Standard plugs shall be inserted into bells of all dead end pipe.

G. All underground pipe shall have a 12 gauge metallic tracer wire running the full length of the pipe. Tracer wire shall be taped to the pipe at intervals not to exceed 15-feet using duct tape and terminate at each end above ground in a 2" PVC riser.

H. Pipe shall be installed with the labels facing upward.

I. At the completion of the project, all on site storm and sanitary sewer lines shall be cleaned out using a hydraulic jet machine in the presence of the owner and engineer. After hydro-jetting storm and sanitary sewer lines, contractor shall run video-camera through pipes and video-record each line segment in order to document proper installation.

3.3 BACKFILLING

A. As soon as practicable after completion of laying and jointing of pipe, backfill the trench. Not more than 200 feet of the trench shall be left open after laying the pipe.

B. Trenches shall be backfilled in accordance with drawing details and notes. Backfill material selected from sewer trench excavation, or obtained from other sources, shall be free from stones, which will interfere with compaction and free of large lumps, which will not break down readily under compaction. Do not use material excavated in large lumps which will not break down or which cannot be spread in loose layers. Material excavated by trenching machine will generally be suitable for use as backfill. Cement stabilized sand shall be in accordance with Section 31 23
23.16 - Cement Stabilized Sand Bedding and Backfill.

C. When placing backfill in the trench simultaneously on both sides of the pipe for the full width of the trench, moisten if necessary and tamp in approximately 6-inch layers, thoroughly compacting under and on each side of the pipe to provide solid backing against the external surface of the pipe. Walking or working on the completed pipeline, except as necessary in tamping or backfilling shall not be permitted until the trench has been backfilled to at least 12-inches over the top of the pipe.

3.4 RESTORATION OF SURFACES

A. Replace or repair sidewalks, driveway culverts, inlets, curbing, gutters, shrubbery, trees, fences, sod and other like obstructions removed or disturbed, to the condition equivalent to that existing prior to commencement of this work. Use concrete having a compressive strength of not less than 3,000 psi in 28 days for the replacement of curbing, gutters, inlets and sidewalks.

B. Use reasonable care in the removal and replacement of shrubbery and trees designated to be replaced at original locations. Where at all possible, ditch alignment will be such as to minimize this work. The restoration of asphalt-topped flexible base and concrete streets shall be as specified under other items of the specifications.

3.5 CLEAN-UP

A. The Contractor shall remove from the site of the work and from public and private property temporary structures, rubbish, and waste materials, including excess excavated materials. The Contractor is responsible for disposing of all surplus earth. The pipe laying operation shall be temporarily suspended if the clean-up is falling behind as determined by the Engineer or Owner.

3.6 MEASUREMENT & PAYMENT

A. No separate measurement or payment will be made for materials and labor performed under this section. Include all costs in the lump sum price.

END OF SECTION 31 23 00

SECTION 31 23 16.16 - STRUCTURAL EXCAVATION AND BACKFILL

CONDITIONS OF THE CONTRACT AND DIVISION 1, as applicable, apply to this Section.

PART 1 – GENERAL

1.1 SCOPE

A. This section describes the excavation for all structures except pipe sewers, the backfilling around completed structures and the disposal of all excess excavated material. All operations required for the proper completion of the excavation work, including sheeting, shoring and bracing, dewatering of excavations and compaction of backfill are included under this section.

1.2 PROTECTION

A. Before the start of earthwork operations, adequately protect existing structures, utilities, trees and shrubs and other permanent objects. Costs resulting from damage to permanent facilities due to negligence or lack of adequate protection will be charged to the Contractor. The Contractor will also be charged for damage to facilities scheduled for later removal or demolition if the damage sufficiently impairs proper operation to the extent that temporary replacement or repair is required.

1.3 PAYMENT

A. No separate payment will be made for work performed under this section. Include the cost of such work in the bid form and specified in other sections of this work.

1.4 BLASTING

A. Blasting will not be permitted.

PART 2 - PRODUCTS

2.1 REGULAR BACKFILL

A. Where no other backfill is specified, use suitable soils from the excavation as backfill material.

2.2 SAND BACKFILL

A. Where sand backfill is specified, use reasonably clean bank sand from an approved source. The sand must be free from large lumps of clay, rubbish, organic matter or other deleterious substances. Not more than 12 percent by weight shall pass the 200 mesh sieve and the plasticity index shall not exceed 4.0. This backfill shall be placed a minimum of 18 inches wide around all below-grade structures.

2.3 FILTER MATERIAL BACKFILL

A. Where shown, use a mixture of concrete gravel and concrete sand. Proportion the mixture with two parts gravel to one part sand by volume. Gravel and sand shall meet requirements of ASTM C 33. The maximum size of acceptable gravel is 1-1/2 inches.

2.4 CEMENT STABILIZED BACKFILL

A. Prepare a mixture of sand, cement and water.

B. Use washed river sand free from large clay lumps or unacceptable amounts of other foreign

materials. The sand must not be darker than the standard color when subjected to a color test in accordance with ASTM C 40.

C. Required gradation of sand:

Screen Size	Percent Retained
3/8-inch screen	0 percent
1/4-inch screen	0 percent - 5 percent
20 mesh screen	15 percent - 50 percent
100 mesh screen	80 percent - 100 percent

D. Use Type I cement conforming to ASTM C 150.

E. Mix in a pug mill using not less than 1-1/2 sacks of cement per cubic yard (unless otherwise specified) of mixture with sufficient water to hydrate the cement.

PART 3 - EXECUTION

3.1 EXCAVATION

A. Excavation work shall be unclassified and includes removal of all types of materials encountered without exception. Make excavations to lines and grades indicated on drawings. Complete excavations within the tolerances specified. Perform all work in conformity with the rules and regulations of the Federal Occupational Safety and Health Act.

1. **Shoring, Bracing, Dewatering**: Provide shoring, bracing and dewatering of excavations required to properly and safely complete the work as shown. Construct shoring and bracing to prevent the excavation from extending beyond specified or indicated limits and to protect workmen. Keep excavations dewatered by drainage, pumps or well points as necessary while work is in progress. Dewatering methods are subject to approval. Remove shoring, bracing and sheathing as excavations are backfilled in a manner to prevent injurious caving.
2. **Pipe Trenches**: Excavate by open cut methods. Make and maintain the sides of the trench as nearly vertical as practical. Provide shoring to maintain the sides of the trench in a vertical position and to protect workmen. Complete and shape the trench to provide free working space and to permit thorough tamping of backfill around the pipe. Grade trench bottoms accurately to provide uniform bearing on firm soil along the entire length of each pipe section. Remove rubbish, rock or debris encountered at grade to at least 6 inches below the bottom of the pipe. Reshape and compact the trench bottom. Working space measured from the outside of the pipe to the side of the trench must be at least 6 inches but not more that 24 inches. Provide bell holes where required for making proper connections at joints.

B. Structures Other than Pipes:

1. Wherever practicable cut all footing excavations to neat lines with a tolerance of minus 1 inch or plus 3 inches and place concrete to bear against earth sides. Cut all excavations a sufficient distance from walls, shafts or similar elements of structures to allow for placing and removing forms and for inspection. Make all excavations at a minimum slope of 1:1 with a 3 feet cut outside of footing lines or wall lines except as shown or specifically authorized.
2. Carry all excavations to the elevations shown and to deeper levels as directed when suitable foundation soils are not encountered at plan depth. Remove all pockets of soft or otherwise unstable soils and replace with concrete or with suitable well compacted soil as directed.
3. Fill all unauthorized excessive excavation with concrete at no change in the contract sum.
4. Protect all open excavations from rainfall or excessive drying. Provide pumps and other equipment as required to keep excavations reasonably free of water at all times and completely free of water during placement of concrete.
5. Do not remove the last 4 inch depth of excavation for slabs or footing until reinforcing steel and concrete are ready to be placed.
6. For footings founded on rock, hard shale or similar material, remove all loose material. Clean

and cut to a firm surface either level, stepped or serrated as directed. Clean out seams and fill with concrete at the time footing concrete is placed.

3.2 BACKFILL

A. Complete backfill to the surface of natural ground or to the lines and grade shown on drawings. Except where special materials are requested, use suitable soils from the excavation as backfill material. Do not use peat or other organic matter, silt, muck, debris or similar materials. Deposit backfill in uniform layers and compact each layer as specified.

1. Backfill at Structures: Place backfill as promptly as practicable after completion of each structure or portion of a structure. Do not, however, place backfill against concrete walls or similar structures until concrete has been cured at least seven days. Remove concrete forms before starting backfill and remove shoring and bracing as the work progresses. Take care to prevent any wedging action of backfill against the structure. Step cut or serrate the slopes bounding the excavation as required to prevent wedging.
2. Backfilling of Pipe Trenches:
   a. Refer to appropriate paragraphs of SECTION 31 23 00 – CONSTRUCTION OF UNDERGROUND UTILITIES.
3. Compaction of Backfill:
   a. Refer to appropriate paragraphs of SECTION 31 23 00 – CONSTRUCTION OF UNDERGROUND UTILITIES.

3.3 DISPOSAL OF EXCESS MATERIAL

A. Dispose of excess or unsuitable material from the excavation off the job site.

END OF SECTION 31 23 16.16

SECTION 31 23 23.16 - CEMENT STABILIZED SAND BEDDING AND BACKFILL

CONDITIONS OF THE CONTRACT AND DIVISION 1, as applicable, apply to this Section.

PART 1 – GENERAL

1.1 SUMMARY

A. This Section specifies cement stabilized sand to be used for backfill and bedding as called for on the drawings, in other parts of the specifications, or as directed by the Engineer.

1.2 PERFORMANCE

A. The sand cement mixtures shall produce a minimum unconfined compressive strength of one hundred pounds per square inch (100 psi) in forty eight hours, when compacted to ninety five percent (95%) of Standard Proctor density (ASTM Method D558), without additional moisture control and when cured in plastic bags at a temperature of 73.4º F at plus or minus 3º F and tested in accordance with ASTM D1633.

B. Random samples of the delivered product will be taken in the field at the direction of the Engineer and tested at the Owners expense.

1.3 MEASUREMENT AND PAYMENT

A. No separate measurement or payment will be made for materials and labor performed under this section. Include all costs in the lump sum price.

PART 2 – PRODUCTS

2.1 MATERIALS

A. Cement shall be Type I Portland cement conforming to ASTM C150. Sand shall be clean durable sand containing not more than the following:
   1. Deleterious Materials:
      a. Clay lumps, when tested in accordance with ASTM C142 shall be less than 0.5 percent. Lightweight pieces, when tested in accordance with ASTM C123 shall be less than 5.0 percent. Organic impurities when tested in accordance with ASTM C40 shall not show a color darker than the standard color.
   2. The plasticity index shall be six (6) or less when tested in accordance with ASTM D4318.
   3. Sand shall be free of organic matter and deleterious substances and shall meet the following gradation requirement.

Square Sieve Size	% Passing, By Weight
3/8"	100%
No. 200	5 - 30%

   4. Water shall be clean and clear, free of oils, acids, alkalis, organic matter or other deleterious substances and shall conform to the requirements of ASTM C94.

2.2 SAND-CEMENT MIXTURE PRODUCT

A. The mixture shall consist of not less than 1.5 sacks of Portland cement per cubic yard (1.1 sacks per ton) of material mixture as placed. The mixture shall contain sufficient water to hydrate the cement.

B. The cement, sand and water shall be mixed in a pug mill type mixer, which meets the approval of the Engineer. It shall be mixed for a minimum period of two minutes per batch.

PART 3 – EXECUTION

3.1 APPLICATION

A. The sand cement mixture shall be placed in maximum eight (8) inch thick lifts, loose measure, and thoroughly rodded and tamped around the pipe, boxes, structures, and paving sections. Placement and compaction shall be performed in a manner that will thoroughly fill all voids without placing undue strain on or displacement of the structure.

B. Cement stabilized sand backfill below the top of sewers, manholes, inlets or other structures shall be placed equally along all sides of the structure. Cement stabilized sand backfill/bedding shall be placed in a manner that will completely fill all voids in the trench. Should compaction be required to fill all voids in the areas described, hand operated tampers may be used.

C. Materials not placed and compacted within four (4) hours after mixing shall be rejected. Do not place or compact sand-cement mixtures in standing or free water.

D. Cement stabilized sand backfill/bedding that is placed in trench bottoms or all other locations between the tops of sewer lines to the bottom of the subgrade, shall be compacted to a minimum of ninety five percent (95%) of Standard Proctor Density (ASTM Method D558), and shall apply to all areas of construction within the limits of the project.

E. In-place density tests shall be taken at each location, each day, to test the placement of bedding/backfill material as directed by the Engineer. In-place densities shall be determined in accordance with ASTM D2922 or ASTM D1556.

END OF SECTION 31 23 23.16

SECTION 31 32 13.19 - LIME STABILIZED SUBGRADE

CONDITIONS OF THE CONTRACT AND DIVISION 1, as applicable, apply to this Section.

PART 1 – GENERAL

1.1 SUMMARY

A. This item shall consist of treating the subgrade, by the pulverizing, addition of lime, mixing and compacting the mixed material to the required depth and density, and in the amounts shown on the plans.

B. This item applies to natural ground, embankment, base or sub-base and shall be constructed to the sections, lines and grades shown on the plans. The subgrade shall be stabilized with lime to a depth of at least 6-inches in the amount recommended by a materials engineering laboratory. The P.I. shall be determined by ASTM Method D4318.

1.2 QUALITY ASSURANCE

A. The Testing Laboratory's representative will determine the Moisture-Density Relationships in accordance with ASTM Method D698 on material secured from the roadway after stabilization with lime, for each type of material encountered.

B. The Testing Laboratory's representative will determine the in-place density in accordance with ASTM Method D2922 or D1556. The minimum level of testing will consist of at least three tests for each 1,000 feet per lane of roadway or 4,000 square feet (500 square yards) of embankment.

1.3 MEASUREMENT AND PAYMENT

A. No separate measurement or payment will be made for materials and labor performed under this section. Include all costs in the lump sum price.

PART 2 – PRODUCTS

2.1 MATERIALS

A. Lime for stabilization shall be classified as Type A- Hydrated Lime, or Type B- Commercial Lime Slurry, conforming to the requirements of Section 31 32 13.20 - Hydrated Lime and Lime Slurry.

2.2 EQUIPMENT

A. The machinery, tools and equipment necessary for proper execution of the work shall be on the project and approved by the Engineer prior to the beginning of construction operations. All machinery, tools and equipment used shall be maintained in a satisfactory and workmanlike manner.

PART 3 – EXECUTION

3.1 CONSTRUCTION METHODS

A. It is the primary requirement of this specification to secure a completed course of treated material containing a uniform lime soil mixture free from loose or segregated areas, of uniform density and moisture content, well bound for its full depth and with a smooth surface suitable for placing subsequent courses. It shall be the responsibility of the Contractor to regulate the sequence of his

work, to use the proper amount of lime, maintain the work and rework the courses as necessary to meet the above requirements.

B. The subgrade shall be constructed and shaped to conform to the typical sections, lines and grades as shown on the plans or as established by the Engineer. The subgrade shall be firm and able to support, without displacement, the construction equipment at the density herein specified. Any wet or unstable materials below the secondary grade shall be corrected, as directed by the Engineer, by scarifying, adding lime, and compacting, or other methods until satisfactory stability is obtained. The cost of the repair of the secondary subgrade and any materials below the secondary subgrade is incidental to this Section.

C. The Contractor shall be required to proof-roll the subgrade, as directed by the Engineer, before using the pulverizing machine and correct any soft areas that this rolling may reveal.

D. Lime shall be spread only on that area where the first mixing operations can be completed during the same working day. The application and mixing of lime with the material shall be accomplished by the methods hereinafter described as "Dry Placing" or "Slurry Placing". When Type A, Hydrated Lime, is specified, the Contractor may use either method, unless otherwise noted on the plans.

E. When dry placing, the lime shall be spread by an approved spreader or by bag distribution at the rates shown on the Bid Sheet, or as directed by the Engineer.

F. The lime shall be distributed at a uniform rate and in such a manner as to reduce the scattering of lime by wind to a minimum. Lime shall not be applied when wind conditions, in the opinion of the Engineer, are such that blowing lime becomes objectionable to traffic or adjacent property owners. A motor grader shall not be used to spread the lime.

G. The material shall be sprinkled as directed by the Engineer, until the proper moisture content has been secured. Where Type A, hydrated lime is specified and slurry placement is used, the Type A hydrate shall be mixed with water to form a slurry of the solids content designated by the Engineer. A minimum of two mixing passes will be required.

H. Where Type B, commercial lime slurry is to be used, it shall be of the minimum solids and purity for the applicable grade being used. The distribution of lime shall be at the rates shown on the proposal form, or as directed by the Engineer. Proper application shall be attained by successive passes over a measured section of the roadway, until the proper moisture and lime content has been secured. The distributor truck shall be equipped with an agitator, which will keep the lime and water in a uniform mixture.

I. The material and lime shall be thoroughly mixed by approved road mixers or other approved equipment, and the mixing continued until, in the opinion of the Engineer, a homogenous friable mixture of material and lime is obtained, such that when all non-slaking aggregates retained on the 3/4-inch sieve are removed, the remainder of the material shall meet the following requirements when tested in accordance with ASTM Method C136, from samples procured from the roadway.

TABLE I

Minimum Passing 1 3/4" sieve	100 Percent
Minimum Passing 3/4" sieve	85 Percent

J. If gradation is achieved on the first mixing, no additional mixing is required.

K. The soil lime mixture shall be sprinkled during the mixing operation as directed by the Engineer to provide optimum moisture in the mixing. The subgrade shall be stabilized to a minimum depth of

6-inches and compacted to a minimum of 95-percent of standard proctor density (ASTM D698) at a moisture content of optimum to 3-percent above optimum.

L. During the interval of time between application and mixing, hydrated lime that has been exposed to the open air for a period of 6-hours, or more, or has had excessive loss due to washing or blowing will not be accepted for payment.

M. Compaction of the mixture shall begin immediately after final mixing unless approval has been obtained from the Engineer not to do so. The material shall be aerated and/or sprinkled as necessary, to provide the optimum moisture content. Compaction shall begin at the bottom and shall continue until the entire depth of mixture is uniformly compacted.

N. The material and lime shall be thoroughly mixed by approved road mixers or other approved equipment and the mixing continued until, in the opinion of the Engineer, a homogenous, friable mixture of material and lime is obtained, free from all clods or lumps. Materials containing plastic clays or other materials which will not readily mix with lime shall be mixed as thoroughly as possible at the time of lime application, brought up to the proper moisture content and left to cure 48 to 96, hours as directed by the Engineer. During the curing period the material shall be kept moist as directed.

O. If a second mixing is required, the material shall be given a final mixing, using approved methods. If the soil binder-lime mixture contains clods, they shall be reduced in size by raking, blading, discing, harrowing, scarifying, or the use of other approved pulverization methods, so that all non- slaking material retained on the 3/4-inch sieve is removed and the remainder of the material shall meet the gradation requirements outlined by Table I. After the second mixing has been completed, the material shall be allowed to cure for a minimum of 3 days, unless otherwise directed by the Engineer.

P. The material shall be sprinkled and rolled, as directed by the Engineer. All irregularities, depressions or weak spots which develop shall be corrected immediately by scarifying the areas affected, adding or removing material as required and reshaping and re-compacting by sprinkling and rolling. The surface of the course shall be maintained and cured for a minimum of 3 days, prior to placing a base or surface course or until traffic is allowed to travel thereon.

Q. In addition to the requirements specified for density, the full depth of the material shown on the plans shall be compacted to the extent necessary to remain firm and stable under construction equipment. After each section is completed, tests as necessary will be made by the Engineer. If the material fails to meet the density requirements, it shall be reworked as necessary to meet these requirements. Throughout this entire operation, the shape of the course shall be maintained by blading and the surface upon completion shall be smooth and in conformity with the typical section shown on the plans and to the established lines and grades. Should the material, due to any reason or cause, lose the required stability, density and finish before the next course is placed or the work is accepted, it shall be reprocessed and refinished at the expense of the Contractor.

3.2 FINISHING

A. After the final course of the lime treated subgrade has been compacted, it shall be brought to the required lines and grades in accordance with the typical sections. The completed section shall then be finished by rolling as directed with a pneumatic tire or other suitable roller sufficiently light to prevent hair cracking. The completed section shall be moist or emulsion cured until covered by base material, unless otherwise directed by the Engineer. If the plans provide for the treated material to be sealed or covered by other courses of material, such seal or course shall be applied within 14 days after final mixing and compaction is completed, unless otherwise directed by the Engineer.

END OF SECTION 31 32 13.19

SECTION 31 32 13.20 - HYDRATED LIME AND LIME SLURRY

CONDITIONS OF THE CONTRACT AND DIVISION 1, as applicable, apply to this Section.

PART 1 – GENERAL

1.1 DESCRIPTION

A. This Section establishes the requirements for hydrated lime and commercial lime slurry of the type and grade considered suitable for use in the treatment of natural or processed materials or mixtures for subgrade, sub-base and base construction.

1.2 MEASUREMENT AND PAYMENT

A. No separate measurement or payment will be made for materials and labor performed under this section. Include all costs in the lump sum price.

PART 2 – PRODUCTS

2.1 MATERIALS

A. The various types and grades are defined and identified as follows:

1. Type A, Hydrated Lime: Shall consist of a dry powder obtained by treating quicklime with enough water to satisfy its chemical affinity for water under the conditions of its hydration. This material is to consist essentially of calcium hydroxide or a mixture of calcium hydroxide and a small allowable percentage of calcium oxide, magnesium oxide and magnesium hydroxide. Hydrated lime shall meet the requirements of ASTM Designation.
   a. When sampled and tested according to prescribed Texas Highway Department procedures, hydrated lime shall conform to the following requirements as to chemical composition:
      1) Hydrate alkalinity, percent by weight CA (OH)2 Min. 90.0%
      2) Unhydrated lime content, percent by weight CaO Max. 5.0%
      3) "Free Water" content, percent by weight H 2 0 Max. 4.0%

   b. The percent by weight of residue retained shall conform to the following requirements:
      1) Residue retained on a No. 6 sieve Max. 0.0%
      2) Residue retained on a No. 10 sieve Max. 1.0%
      3) Residue retained on a No. 30 sieve Max. 2.5%

   c. Specifications for Type "A" applies specifically to the normal hydrate of lime made from "high-calcium" type limestone. Hydrated Lime for stabilization purposes shall be applied, as provided in the governing specifications, as a dry powder or mixed with water to form a slurry.

2. Type B, Commercial Lime Slurry: Shall be pumpable suspension of solids in water. The water or liquid portion of the slurry shall not contain dissolved material in sufficient quantity and/or nature injurious or objectionable for the purpose intended. The solids portion of the mixture, when considered on the basis of "solids content", shall consist principally of hydrated lime of a quality and fineness sufficient to meet the following requirements as to chemical composition, residue and delivered in trucks which shall be equipped with an agitator which will keep the lime and water in a uniform mixture.
   a. Chemical Composition: The "solids content" of the lime slurry shall have a hydrate alkalinity Ca (OH)2 of not less than 90% by weight.

b. Residue: The percent by weight of residue retained in the "solids content" of lime slurry shall conform to the following requirements:

1)	Residue retained on a No. 6	sieve	Max. 0.0%
2)	Residue retained on a No. 10	sieve	Max. 1.0%
3)	Residue retained on a No. 30	sieve	Max. 2.5%

c. Type B: Commercial Lime Slurry shall conform to one of the following grades:
   1) Grade 1: The "Dry Solids Contents", shall be at least 31 percent by weight of the slurry.
   2) Grade 2: The "Dry Solids Contents", shall be at least 35 percent by weight of the slurry.
   3) Grade 3: The "Dry Solids Contents", shall be at least 46 percent by weight.

PART 3 – EXECUTION

3.1 SAMPLING AND TESTING

A. The sampling and testing of lime slurry shall be as determined by Test Method Tex-600-J, "Lime Testing Procedure".
   1. When Type A: Hydrated Lime is used, the quantity of lime will be measured by the ton of 2000 pounds, dry weight.
   2. When Type B: Commercial Lime slurry, is used, the quantity of lime shall be calculated from the required minimum percent solids based upon the use of Grade 1, Grade 2, or Grade 3 as follows:
      a. Grade 1: The "Dry Solids Content" shall be at least 31 percent by weight of the slurry and the quantity of lime will be calculated by the ton of 2000 pounds based on the 31 percent dry weight solids.
      b. Grade 2: The "Dry Solids Content" shall be at least 35 percent by weight of the slurry and the quantity of lime will be calculated by the ton of 2000 pounds based on the 35 percent dry weight solids.
      c. Grade 3: The "Dry Solids Content" shall be at least 46 percent by weight of the slurry and the quantity of lime will be calculated by the ton of 2,000 pounds based on the 46 percent dry weight solids.

END OF SECTION 31 32 13.20

SECTION 31 32 13.21 - LIME-FLYASH STABILIZED SUBGRADE

CONDITIONS OF THE CONTRACT AND DIVISION 1, as applicable, apply to this Section.

PART 1 - GENERAL

1.1 SCOPE

A. This item shall consist of treating the subgrade by the pulverizing, addition of lime flyash and/or flyash, mixing and compacting the mixed material to the required density. This item applies to natural ground and embankment and shall be constructed as specified herein and in conformity with the typical sections, lines and grades shown on the Plans.

1.2 QUALITY ASSURANCE

A. The Materials Engineer will determine the Moisture-Density Relationship in accordance with ASTM Method D698, on material secured from the roadway. Samples shall be blended with Lime-Flyash in the laboratory for each type of material encountered.

B. The Materials Engineer will determine the in-place density in accordance with ASTM Method D2922 or D1556. The minimum level of testing will consist of at least three tests of 4,000 square feet (500 square yards) of subgrade.

1.3 MEASUREMENT AND PAYMENT

A. No separate measurement or payment will be made for materials and labor performed under this section. Include all costs in the lump sum price.

PART 2 – PRODUCTS

2.1 MATERIALS

A. Hydrated lime shall meet the requirements of ASTM C977 and SECTION 31 32 13.20 – HYDRATED LIME AND LIME SLURRY of these Specifications. When Type B, commercial lime slurry, is specified, the Contractor shall select, prior to construction, the grade to be used and shall notify the Engineer in writing before changing from one grade to another.

B. Flyash shall meet the requirements of ASTM C618, Class C. Flyash shall also have a minimum CaO content of 20 percent.

C. Water shall meet the requirements of ASTM Designation C94.

2.2 EQUIPMENT

A. Machinery, tools and equipment for proper performance of the work shall be on the Project and approved by the Engineer prior to the beginning of construction operations.

B. All machinery, tools and equipment used shall be maintained in a satisfactory and workmanlike manner.

C. Hydrated lime and flyash shall be stored and handled in closed, weatherproof containers until immediately before distribution on the subgrade. If storage bins are used, they shall be completely enclosed. Materials in bags shall be stored in weatherproof buildings with adequate protection from ground dampness.

D. If lime and/or flyash are furnished in trucks, each truck shall have a weight ticket from a certified

scale.

E. If lime and/or flyash are furnished in bags, each bag shall bear the manufacturer's certified weight. Bags varying more than five percent from that weight may be rejected and the average weight of the bags in any shipment, as shown by weighing 50 bags taken at random, shall not be less than the manufacturer's certified weight.

PART 3 – PRODUCTS

3.1 CONSTRUCTION METHODS

A. It is the primary requirement of this Specification to secure a complete course of treated material containing a uniform lime-flyash or flyash mixture free from loose or segregated areas, of uniform density and moisture content, well bound for its full depth, and with a smooth surface and suitable for placing subsequent courses. It shall be the responsibility of the Contractor to regulate the sequence of his work, to use the proper amount of lime and flyash, maintain the work and rework the courses as necessary to meet the above requirements.

B. Before other operations are begun, the subgrade shall be graded, shaped, and compacted as required to construct the lime-flyash or flyash treatment for materials in-place in conformance with the lines, grades, thickness and typical cross sections shown on the Plans. Unsuitable soil or material shall be removed and replaced with acceptable material.

C. The subgrade shall be firm and able to support, without displacement, the construction equipment at the compaction hereinafter specified. Soft or yielding subgrade shall be corrected and made stable by scarifying and aeration or adding lime and/or flyash and compacting until it is of uniform stability.

D. The Contractor shall be required to use a cutting and pulverizing machine that will remove the subgrade material accurately to the secondary subgrade; and pulverize the material at the same time. He will not be required to expose the secondary grade nor windrow the material. However, the Contractor shall be required to roll the subgrade, before using the pulverizing machine and correct any soft areas that this rolling may reveal. This method will be permitted only where a machine is provided which will insure that the material is cut uniformly to the proper depth and which has cutters that will plane the secondary grade to a smooth surface over the entire width of the cut.

E. The cost of the repair of the secondary subgrade and any materials below the secondary subgrade is incidental to this item.

F. When lime-flyash stabilization is required it shall be a two-phase operation, with the lime placed and allowed to cure, before the flyash stabilization begins.

G. Application of the lime and the subsequent curing shall be in accordance with SECTION 31 32 13.19 - LIME STABILIZED SUBGRADE. After the subgrade has cured for the time required by that Specification, then flyash stabilization may begin. Flyash stabilization shall be in accordance with this Specification. Unless otherwise noted, the thickness of stabilization shall be 6-inches.

H. The machine will be of such design that a visible indication is given at all times that the machine is cutting to the proper depth.

I. Lime shall be spread only on that area where the first mixing operation can be completed during the same working day.

J. The sequence of application of lime and flyash, with the material, shall be accomplished by the methods hereinafter described as "Dry Placing", or "Slurry Placing". When Type A, hydrated lime is specified, the Contractor may use either method.

K. The lime or flyash shall be spread by a spreader or by bag distribution at the rate directed by the Engineer.

L. For dry placing, the lime or flyash shall be distributed at a uniform rate and in such a manner as to reduce the scattering of lime or flyash by wind to a minimum. Lime or flyash shall not be applied when wind conditions are such that blowing lime or flyash becomes objectionable to traffic or adjacent property owners. A motor grader shall not be used to spread the lime or flyash.

M. The materials shall be sprinkled until the proper moisture content has been secured. However, initial mixing after the addition of lime or flyash will be accomplished dry or with a minimum of water to prevent lime and/or flyash balls.

N. For slurry placing, the lime or flyash shall be mixed with water in vehicles with approved distributors and applied as a thin water suspension or slurry.

O. Type B, commercial lime slurry, shall be applied with a lime percentage not less than that applicable for the grade used. The distribution of lime and flyash shall be attained by successive passes over a measured section of roadway until the proper moisture and lime or flyash content has been secured. The distributor vehicle shall be equipped with an agitator, which will keep the lime or flyash and water in a uniform mixture.

P. The mixing procedure shall be the same for "Dry Placing or "Slurry Placing", as hereinafter described.

Q. The material shall be uniformly mixed by approved methods. If the soil binder lime mixture contains clods, they shall be reduced in size by raking, blading, discing, harrowing, scarifying or the use of other approved pulverization methods so that when all non-slaking aggregates retained on the 3/4" sieve are removed, the remainder of the material shall meet the following requirements when tested at the field moisture condition, or dry by laboratory sieves in accordance with ASTM Method C136.

Minimum Passing	1-3/4 sieve	100 percent
Minimum Passing	3/4 sieve	85 percent

R. It is the intent of this Specification that lime and flyash shall be spread as directed by the Engineer.

S. The amount of lime and flyash used shall be as directed by the Engineer.

T. During the interval of time between application and mixing, hydrated lime or flyash that has been exposed to excessive loss due to washing or blowing will not be accepted for payment. Spreading, mixing, compaction and finishing for lime-flyash stabilized subgrade should be completed during daylight hours of the same day.

U. If flyash only is to be used without lime, the following mixing procedures shall apply.

V. The raw material shall be thoroughly mixed by approved road mixers or other approved equipment, and the mixing continued until a homogeneous, friable mixture is obtained, free from all clods or lumps.

W. The flyash shall be distributed at a uniform rate and in such manner as to reduce the scattering of flyash by the wind to a minimum. Flyash shall not be applied when wind conditions, are such that blowing flyash becomes objectionable to traffic or adjacent property owners. A motor grader shall not be used to spread flyash.

X. The material and flyash shall be thoroughly mixed by approved road mixers or other approved equipment and the mixing continued until a homogeneous, friable mixture of materials is obtained, free from all clods or lumps. If the soil binder-flyash mixture contains clods, they shall be reduced in size by raking, blading, discing, harrowing, scarifying or the use of other approved pulverization

methods so that when all nonslaking aggregates, retained on the 3/4" sieve are removed, the remainder of the material shall meet the following requirements when tested at the field moisture condition or dry by laboratory sieves using ASTM Method C136:

Minimum Passing 1-3/4 sieve	100 percent
Minimum Passing 3/4 sieve	85 percent

Y. Flyash shall be applied only to such an area that all the operations can be continuous and completed in daylight.

Z. During the interval of time between application and mixing, flyash that has been exposed to the open air for a period of 6 hours or more, or to excessive loss due to washing or blowing will not be accepted for payment. It is recommended that the mixing and compaction of flyash stabilized subgrade by completed within 2 hours in order to take advantage of rapid initial set characteristics.

AA. Mixing after the addition of flyash will be accomplished dry or with a minimum of water to prevent flyash balls.

BB. Compaction of the mixture shall begin immediately after adding and mixing of the last stabilizing agent and be completed within 6 hours. The material shall be aerated or sprinkled as necessary to provide the optimum moisture. Compaction shall begin at the bottom and shall continue until the entire depth of the mixture is uniformly compacted to 95 percent of standard proctor density (ASTM D698), to a minimum depth of 6 inches. In addition to the requirements it shall be compacted to the extent necessary to remain firm and stable under the construction equipment. Throughout the entire operation the shape of the course shall be maintained by blading, and the surface upon completion shall be smooth and in conformity with the typical section shown of the Plans and to the established lines and grades.

CC. After the final layer of the lime-flyash or flyash treated subgrade has been compacted, it shall be brought up to the required lines and grades, and in accordance with the typical sections.

DD. The resulting surface shall be thoroughly rolled with a pneumatic tire roller and skinned by a power grader to achieve final grade, removing all loosened stabilized material from the section. The surface shall be thoroughly compacted with the pneumatic roller, adding small increments of moisture as needed during rolling. If aggregate larger than a 3/4" screen is present in the mixture, one complete coverage of the section with the flat wheel roller shall be made immediately after the skinning operation. Surface finishing methods may be varied from this procedure to provide a dense, uniform surface, free of surface compaction planes. The moisture content of the surface material must be maintained at optimum during all finishing operations. Surface compaction and finishing shall proceed in such a manner as to produce, in not more than 2 hours, a smooth, closely knit surface, free of cracks, ridges or loose material conformity to the crown, grade and line shown on the Plans.

EE. After the lime-flyash or flyash treated course has been finished as specified herein, the surface shall be protected against rapid drying by either of the following curing methods for a period of not less than 3 days or as directed by the Engineer.

1. Maintain in a thorough and continuously moist condition by sprinkling.
2. Apply an asphalt membrane to the treated course, immediately after same is completed. The asphalt material for the membrane shall be MC-30. Asphaltic material shall meet the requirements of Item 300, Oils, Asphalts and Emulsions, of the TxDOT "Standard Specifications for Construction of Highways, Streets and Bridges". The asphalt shall completely cover and seal the total surface of the base and fill all voids. If the Contractor elects to use this method, it shall be his responsibility to protect the asphalt membrane from being picked up by traffic.

FF. The asphalt membrane may remain in place when the proposed surface or other base courses are applied.

GG. Completed sections of lime-flyash or flyash treated material in-place may be opened immediately to local traffic and to construction equipment and to all traffic after the curing period, provided the lime- flyash or flyash treated course has hardened sufficiently to prevent marring or distorting the surface by equipment or traffic, and after the minimum 3 day curing period. If the Plans provide for the treated material to be sealed or covered by other courses of material such seal or course shall be applied within 14 days after compaction unless otherwise directed by the Engineer. Should the material, due to any reason or cause, lose the required stability, density and finish before the next course is placed, it shall be reprocessed and refinished at the expense of the Contractor.

END OF SECTION 31 32 13.21

SECTION 321313 - CONCRETE PAVING

1.1 GENERAL

1.2 Scope

A. This Section specifies the requirements for forming and placing reinforced concrete pavement and sidewalks to the lines and grades shown on the drawings and constructed as specified herein.

1.3 Applicable Publications

A. The following specifications and standards of the latest issues listed below, but referred to thereafter by basic designation only, form a part of this specification to the extent indicated by the references thereto:

1. Texas State Department of Highways and Public Transportation 1982 Standard Specifications for Construction of Highways, Streets and Bridges (TXDOT):

a. Item 360 concrete pavement (water cement ratio.)

b. Item 526 membrane curing.

2. American Society for Testing and Materials Standards (ASTM):

a. D 1751 preformed expansion joint filler for concrete paving and structural construction.

b. A 525 steel sheet, zinc-coated (galvanized).

c. C 309 liquid membrane forming compounds for curing concrete.

d. A 615 standard specification for deformed billet-steel bars for concrete reinforcement.

e. C 94 ready mixed concrete

f. C 31 method of making and curing concrete compression on flexure test specimens in the field

g. C 39 method of test for compress strength of molded concrete cylinders

h. A 186 welded steel wire, fabric, plain, for concrete reinforcement

1.4 Related Sections

A. Site Preparation: Section 311100

B. Fine Grading: Section 312216

2.1 MATERIAL

2.2 Concrete

A. Cement, aggregates, admixtures, and water shall conform to the specifications of TXDOT, Item 421. Preparation of concrete mix shall be in accordance with article 360.3 of TXDOT, Item 360, plus the following:

1. Concrete strength shall be designed to produce a 2,000 psi minimum compressive strength at 7 days and a 3,500 psi minimum compressive strength at 28 days.

B. Maximum size of aggregate 1-1/2 inches.

C. Slump shall range from 1 to 3 inches.

D. Air entrainment concrete mixture shall have an air content by volume of 4.5 percent plus or minus 1.5%.

E. Concrete shall be mixed in accordance with TXDOT, Item 522.

F. Ready mixed concrete conforming to ASTM C 94 may be used.

G. The concrete mix shall be designed by a commercial testing laboratory, and submitted for approval.

2.3 Reinforcement

A. Reinforcing steel shall meet the specifications of ASTM A615, Grade 60. Bars shall be deformed billet steel free of defects.

2.4 Board Filler

A. Timber Boards shall meet the specifications of TXDOT Item 433.2(5)(a).

B. Impregnated asphalt board shall conform to TXDOT Item 433.2(5)(b).

C. Board filler shall be free of defects which will impair their usefulness as expansion joint filler.

2.5 Preformed Bituminous Expansion Board

A. Preformed bituminous expansion boards shall meet the specifications for ASTM D 1751.

2.6 Joint Sealing Material

A. Curbs and Pavement joint sealing material shall meet the requirements and specifications of TXDOT Items 360.3(F).

B. Sidewalk joint sealing materials shall be “Sonolastic Sealant Two-part”, as manufactured by Sonneborn-Contech, Building product division, Contech, Inc. or approved equal. Color shall match adjacent concrete work.

2.7 Deformed Contraction Joint Metal Strips

A. Deformed contraction joint metal strips shall be 28 ga. steel, galvanized 1.25 oz. per square foot or heavier and meet the specifications of ASTM A 525.

2.8 Curing Compound

A. Curing compound shall conform to the specifications of ASTM C 309, Type 1 or Type 2, white pigmented.

2.9 Load Transmission Devices For Expansion And Contraction Joints

A. Load Transmission devices shall be as detailed on plans and conform to the properties specified in ASTM A615, Grade 60 steel.

2.10 Steel Dowel Bars

A. Steel dowel bars and steel reinforcement shall be deformed or smooth bars conform in properties to ASTM A615 Grade 40. Unless otherwise shown on the plans all reinforcing steel shall be deformed bars, all dowel bars at joints shall be smooth bars, and all curb dowels shall be deformed bars.

3.1 EXECUTION

3.2 General

A. The curb and sidewalk pavement shall be constructed to the lines and grades shown on the drawings.

3.3 Pavement

A. Preparation of subgrade

1. The subgrade shall be a previously prepared subgrade, stabilized if required, compacted to a minimum of 95% standard density ASTM D-698, and graded to the required section and grades shown on the drawings and as specified.

2. Rolling and sprinkling shall be performed to maintain the specified moisture content of the subgrade as necessary prior to placing the concrete curbs. Refer to section 31 2216, Fine Grading for applicable specifications for materials and placement.

B. Placing and removing Forms

1. Forms shall be of wood or metal, properly treated to insure concrete does not adhere to the forms, straight, clean, free from warp or defect, and of sufficient depth. The forms shall be so placed that when placed each form section will be firmly in contact for its whole length and base width and exactly at the established grade. Any subgrade under the forms below established grade shall be corrected using suitable material, placed, sprinkled, and rolled.

2. Forms shall be securely staked and tightly jointed and keyed to prevent displacement.

3. Sufficient stability of forms to support equipment operated thereon and to withstand its vibration without springing shall be required.

4. Forms shall remain in place not less than 24 hours after concrete is placed.

C. Joints in Concrete Pavement

1. Shall be constructed in the pavement slab at locations and according to details as shown on the drawings. Stakes, braces, brackets or other devices shall be used as necessary to keep the entire joint assembly in true vertical and horizontal position.

2. When prefabricated plastic strips are used to form joints, they shall be placed after the concrete surface has been leveled and before the finishing is completed. The strips shall be of a type specifically manufactured for the purpose of forming joints in concrete pavement and to the dimensions as required to form the specified joints. The strips shall be removed after the concrete has set per the manufacturer's recommendations. Any blemishes caused by the removal of the strips shall be repaired immediately using approved methods.

D. Tie Bars And Load Transmission Devices

1. Shall be accurately placed and held securely (parallel to pavement surface and perpendicular to joint) during placing and finishing of pavement.

E. Expansion Joints

1. Shall be constructed with board filler and sealed at top. Board filler must be perpendicular to plane of concrete slab. Alignment of joint shall not vary more than 1/4 inch in 10 feet.

F. Reinforcing Steel

1. Shall be accurately placed as shown on drawings and secured in place. Each bar intersection shall be tied. All bars shall be supported on steel or plastic bar chairs. Laps

shall be a minimum of ten (10) inches and tied. Wire fabric may not be used in vehicular pavement.

G. Concrete Placing And Finishing

1. Concrete not placed as herein prescribed within 90 minutes after mixing shall be rejected.

2. Concrete shall not be placed when temperature is below 40o F and falling, but may be placed when the temperature is above 35o F and rising, the temperature being taken in the shade and away from artificial heat.

3. Concrete shall not be placed before the time of sunrise, and shall not be placed later than will permit the finishing of the pavement during sufficient natural light.

4. Concrete shall be consolidated by a mechanical vibrator to remove all voids. Special care shall be exercised in placing and spading concrete against forms and at all joints to prevent the forming of honeycombs and voids and to prevent displacement of steel reinforcement and load transmission devices.

5. The concrete shall be struck off with an approved strike-off screed to such elevation that when consolidated and finished, the surface of pavement shall conform to the required section and grade. In no case shall the maximum ordinate from a 10 foot straight edge to the pavement be greater than 1/8 inch.

6. The strike template shall be moved forward with a combined transverse and longitudinal motion in the direction the work is progressing, maintaining the template in contact with the forms, and maintaining a slight excess of material in front of the cutting edge.

7. After completion of a strike-off, consolidation and transverse screeding, a hand-operated longitudinal float shall be operated to test and level the surface to the required grade.

8. Workmen shall operate the float from approved bridges riding on the forms and spanning the pavement. The longitudinal float shall be held in contact with the surface and parallel to the center line, and operated with short longitudinal strokes while being passed from one side of the pavement to the other. If contact with the pavement is not made at all points, additional concrete shall be placed if required, and screeded, and the float shall be used to produce a satisfactory surface. After a section has been smoothed so that the float maintains contact with the surface at all points in being passed from one side to the other, the bridges may be moved forward half the length of the float, and the operations repeated.

9. After completion of the straightedge testing, a pass with a burlap drag shall be made as soon as construction operations permit and before the water sheen has disappeared from the surface. This shall be followed by as many passes of the drag as required to produce the desired surface texture.

10. After completion of dragging and about the time the concrete becomes hard, the edge of the slab and joints shall be left smooth and true to line.

H. Curing

1. Concrete pavement shall be cured by protecting it against excessive loss of moisture for a period of not less than 72 hours from the beginning of curing operation.

2. Immediately after finishing operations have been completed, the entire surface of the newly laid concrete shall be covered and cured in accordance with the requirements of "Membrane Curing", TXDOT Item 360.4(6) and Item 360.11(3).

3. Special care should be exercised to keep spraying curing compound out of pavement joints.

3.4 Application Of Joint Sealing Compound

A. Joints shall be thoroughly cleaned of loose scale, dirt, dusts and curing compound. When necessary, existing joint material shall be removed to the depth as shown on the plans.

B. Joints shall be filled to the full depth of the joint opening. Pouring shall be done in a neat and workman like manner to give satisfactory results. Sufficient joint sealer shall be poured into the joints so that upon the completion of the work the surface of sealer within the joint shall be 1/4" above top of the pavement surface.

4.1 TESTS

A. Test cylinders for compressive strength shall be taken and cured in accordance with ASTM C 31 and tested in accordance with ASTM C 39. At least 4 cylinders shall be made for each day for each 100 c.y. of concrete or fraction thereof, placed. A testing laboratory for the tests shall be selected and paid for by the owner.

B. Testing Of Concrete Surface

1. After finishing is complete and while the concrete is still workable, the surface shall be tested for trueness with an approved 10' steel straightedge.

2. The straightedge shall be operated from the side of the pavement placed parallel to the pavement center line and passed across the slab to reveal any high spots or depressions.

3. The straightedge shall be advanced along the pavement in successive stages of not more than 1/2 its length. A tolerance of 1/8" in 10' must be met.

4. Any correction of the surface required shall be accomplished by adding concrete if required and by operating the longitudinal float over the area.

5. The surface test with the straightedge shall then be repeated.

4.2 Opening Pavement To Traffic

A. The pavement shall be closed to all traffic, including vehicles of the contractor, until the concrete is at least 7 days old or has attained a minimum average of 2000 psi compressive strength.

B. Any damage to the pavement prior to acceptance by the owner shall be repaired by the contractor at no extra cost to the owner.

C. This does not relieve the contractor from the normal liabilities and maintenance responsibilities, implied or otherwise, for the pavement or other items.

END OF SECTION 321313

SECTION 328000 - **LANDSCAPE IRRIGATION SYSTEM**

PART 1 -- GENERAL

1.1 SCOPE:

A. Furnish all work and materials, appliances, tools, equipment, facilities, transportation, and services necessary for and incidental to performing all operations in connection with the installation of underground sprinkler irrigation system complete, as shown on drawings and/or specified herein. When the term "Contractor" is used in this section, it shall refer to the irrigation Subcontractor.

1.2 QUALITY ASSURANCE:

The following Codes, Regulations, Reference Standards, and Specifications apply to work included in this section: ASTM: D2241, D2464, D2466, and D2564.

1.3 WARRANTY AND MAINTENANCE:

A. The Contractor shall warranty material and workmanship for one year after final acceptance including repair and replacement of defective materials, workmanship, and repair of backfill settlement.

B. Maintenance during warranty shall include, but not necessarily be limited to, the following:

1. Adjustment of sprinkler height and plumb to compensate for settlement and/or plant growth.
2. Backfilling of all trenches.
3. Adjustment of head coverage (arc of spray) as necessary.
4. Unstopping heads plugged by foreign material.
5. Adjustment of controller as necessary to insure proper sequence and watering time.
6. All maintenance necessary to keep the system in good operating order. Repair of damage caused by vandals, other contractors or weather conditions shall be considered extra to these specifications.

C. Warranty and maintenance after final acceptance does not include alterations as necessitated by re-landscaping, re-grading, addition of trees or the addition, and/or changes in sidewalks, walls, driveways, etc.

D. Maintenance shall continue for **90 days** after final acceptance.

1.4 SUBMITTALS:

A. The Contractor shall submit shop drawings or manufacturer's "cut sheet" for each type of sprinkler head, pipe, controller, valves, check valve assemblies, valve boxes, wire, conduit, fittings, and all other types of fixtures and equipment proposed to install on the job. The submittal shall include the manufacturer's name, model number, equipment capacity, and manufacturer's installation recommendation, if applicable, for each proposed item.

B. No partial submittal will be accepted and submittals shall be neatly bound into a brochure and logically organized. After the submittal has been approved, substitutions will not be allowed except by written consent of the Landscape Architect.

C. Shop drawings shall include dimensions, elevations, construction, details, arrangements, and capacity of equipment, as well as manufacturer's installation recommendations.

1.5 "APPROVED EQUAL" SUBSTITUTIONS:

Several items in this section and on the plans are specified by a manufacturer's brand name and catalog number, followed by the phrase "or approved equal". This is not intended to unduly restrict competitive procurements or bidding, but is done to assure a minimum standard of quality which is believed to be best for the item specified and to match existing equipment.

1.6 CODES/PERMITS:

A. All work under this section shall comply with the provisions of these Specifications, as illustrated on the accompanying drawings, or as directed by the Owner and shall satisfy all applicable local codes, ordinances, or regulations of the governing bodies and all authorities having jurisdiction over this Project.

B. Installation of equipment and materials shall be done in accordance with requirements of the National Electrical Code, City Plumbing Code, and standard plumbing procedures. The drawings and these Specifications are intended to comply with all the necessary rules and regulations; however, some discrepancies may occur, the Contractor shall immediately notify the Landscape Architect in writing of the discrepancies and apply for an interpretation. Should the discovery and notification occur after the execution of a contract, any additional work required for compliance with the regulations shall be paid for as covered by these Contract documents.

C. The Contractor shall give all necessary notices, obtain all permits, and pay all costs in connection with his work; file with all governmental departments having jurisdiction; obtain all required certificates of inspection for his work and deliver to the Owner.

D. The Contractor shall include in the work any labor, materials, services, apparatus, or drawings in order to comply with all applicable laws, ordinances, rules, and regulations whether or not shown on the drawings and/or specified.

E. The installation of the irrigation system shall be made by an individual or firm duly licensed under Article No. 8751 VTCS, Titled "Licensed Irrigators Act", S.B. No. 259 as passed by the 66th Texas Legislature.

1.7 EXISTING UTILITIES:

A. Locations and elevations of various utilities included with the scope of this work have been obtained from the most reliable sources available and should serve as a general guide without guarantee to accuracy. The Contractor shall examine the Site and verify to his own satisfaction the locations and elevation of all utilities and availability of utilities and services required. The Contractor shall inform himself as to their relation to the work and the submission of bids shall be deemed as evidence thereof. The Contractor shall repair at his own expense, and to the satisfaction of the Owner, for damage to any utility shown or not shown on the plans.

B. Should utilities not shown on the plans be found during excavations, Contractor shall promptly notify the Owner for instructions as to further action.

C. Contractor shall make necessary adjustments in the layout as may be required to connect to existing

stub-outs, should such stub- outs not be located exactly as shown and as may be required to work around existing work, at no increase in cost to the Owner. All such work will be recorded on record drawings and turned over to the Owner prior to final acceptance.

1.8 RECORD DRAWINGS:

A. Record dimensioned locations and depths for each of the following:

1. Point of connection.
2. Sprinkler pressure line routing (provide dimensions for each 100 lineal feet (maximum) along each routing, and for each change in directions).
3. Gate valves.
4. Sprinkler control valves (buried only).
5. Control wire routing.
6. Other related items as may be directed by the Landscape Architect.

B. Locate all dimensions from two permanent points (buildings, monuments, sidewalks, curbs, or pavements).

C. Record all changes which are made from the Contract drawings, including changes in the pressure and non-pressure lines.

D. Record all required information on a set of blackline prints of the Contract drawings. Do not use these prints for any other purpose.

E. Maintain information daily. Keep Contract drawings at the Worksite at all times and available for review by the Owner's representative.

F. When record drawings have been approved by the Owner's Representative, transfer all information to a set of reproducible mylars using permanent India ink. Changes using ball-point pen are not acceptable. Make dimensions accurately at the same scale used on original Drawings, or larger. If photo reduction is required to facilitate controller chart housing, notes or dimension must be a minimum 1/4 inch in size.

G. Reproducible mylars will be furnished by the Owner cost for printing and handling.

1.9 CONTROLLER CHARTS:

A. Do not prepare charts until record drawings have been approved by the Owner's representative.

B. Provide one controller chart for each automatic controller installed.

1. Chart may be a reproduction of the record drawing, if the scale permits fitting within the controller door. If photo reduction prints are required, keep reduction to maximum size possible to retain full legibility.
2. Chart shall be blackline print of the actual system, showing the area covered by that controller.

C. Identify the area of coverage of each remote control valve, using a distinctly different pastel color, drawn over the entire area of coverage.

D. Following approval of charts by the Owner's representative, they shall be hermetically sealed between two layers of 20 mil. thick plastic sheet.

E. Charts must be completed and approved prior to final acceptance of the irrigation system.

1.10 OPERATING AND MAINTENANCE MANUALS:

A. Provide individual bound manuals detailing operating and maintenance requirements for irrigation systems.

B. Manuals shall be delivered to the Owner’s representative for review and approval no later than 10 days prior to completion of work. Revise manual as required.

C. Provide descriptions of all installed materials and systems in sufficient detail to permit maintenance personnel to understand, operate, and maintain the equipment.

D. Provide the following in each manual:

1. Index sheet, stating Irrigation Contractor's name, address, telephone number, and name of person to contact.
2. Duration of guarantee period.
3. Equipment list providing the following for each item:
    a. Manufacturer's name.
    b. Make and model number.
    c. Name and address of local manufacturer's representative.
    d. Spare parts list in detail.
    e. Detailed operating and maintenance instructions of major equipment.
4. Recommended programs for watering by season.

1.11 CHECKLIST:

A. Provide a signed and dated checklist, and deliver to the Owner’s representative prior to final acceptance of the work.

B. Use the following format:

1. Plumbing permits: if none required, so note.
2. Material approvals: approved by and date.
3. Pressure line tests: by whom and date.
4. Record Drawings: received by and date.
5. Controller charts: received by and date.
6. Materials furnished: received by and date.
7. Operation and maintenance manuals: received by and date.
8. System and equipment operation instructions: received by and date.
9. Manufacturer's warranties if required: received by and date.
10. Written guarantee: received by and date.
11. Lowering of heads in lawn areas: if incomplete, so state.

1.12 ELECTRIC POWER:

Electric power shall be provided within five feet of each controller location by the G.C. The irrigation contractor

shall provide final hardwire connection.

1.13 WATER FOR TESTING:

Unless noted otherwise on the plans or elsewhere, furnish all water necessary for testing, flushing, and jetting.

1.14 BORINGS, SLEEVES AND ELECTRICAL CONDUITS:

Sleeves and electrical conduits are the responsibility of the Irrigation Contractor to install prior to paving or related construction and should be installed as noted on the drawings and specifications. Contractors shall be responsible for locating all sleeves and conduits at no additional cost to the Authority. Borings under existing paving will be required where noted on the drawings and shall be provided at no additional cost to the Owner. Borings shall be a minimum of 18 inch depth and new pipes shall be incased in Class 200 sleeves.

1.15 SPARE PARTS:

The Contractor shall supply the Owner with five spray heads, one for each head designated on the plan. The Contractor shall supply one additional key and hose swivel for the quick coupler.

PART 2 - PRODUCTS

2.1 GENERAL:

Unless otherwise noted on the plans, all materials shall be new and unused. The irrigation equipment catalog numbers used for reference in these Specifications are to establish minimum quality standards and may be substituted with an "approved equal" as outlined in Paragraph 1.5 of this section.

2.2 POLYVINYL CHLORIDE PIPE (PVC PIPE):

PVC pipe manufactured in accordance with ASTM Standards noted herein.

A. Marking and Identification: PVC pipe shall be continuously and permanently marked with following information: Manufacturer's name, size, type of pipe, and material, SDR number, Product Standard number, and the NSF (National Sanitation Foundation) Seal.

B. PVC pipe fittings: Shall be of the same material as the PVC pipe specified and compatible with PVC pipe furnished. Solvent weld type shall be Schedule 40.

C. PVC Pipe: Shall be Sch. 40 for all mainline, Class 200 solvent weld, SDR-21, PS 22-70 for all lateral pipe sizes 3/4 inch to 3 inches. All 1/2 inch pipe shall be solvent weld SDR- 13.5, Class 315. Mainline pipe size 4” and larger shall be PVC o-ring gasket type with ductile iron fittings by Harco Industries.

D. Flexible PVC Risers (Nipples): All flexible PVC nipples shall be made from virgin PVC material, and shall comply with ASTM D2287, shall be tested at 200 P.S.I. static pressure for 2 hours and have a quick burst rating of a minimum 400 P.S.I. Flexible PVC pipe nipples shall be factory assembled only.

E. Pipe sleeves: Shall be Class 200 solvent weld, SDR-21, PSD 22-70 for all sizes 3/4 inch to 2 inches; all 1/2 inch pipe shall be solvent weld SDR-13.5, Class 315; and located as shown on drawings.

2.3 SWING JOINTS:

Swing joints shall be O-ring seal type, Lasco or approved equal.

2.4 WIRE AND SPLICES:

A. All valve wire from the decoder to the electric valves shall be single strand solid copper, minimum 14 gauge with type UF insulation which is Underwriters Laboratory approved for direct underground burial when used in a National Electrical Code Class II Circuit (30 volts AC or less) as per Articles 725 and 300. Voltage drop shall be taken into consideration.

B. Control cable from the controller to valve decoders shall be MAXI- wire as manufactured by Rainbird Corporation. All connectors shall be UL listed, rated 600 volt, for PVC insulated wire. No wire splices shall be buried.

C. All wire connectors shall have a two-piece PVC housing which, when filled with resin epoxy and pressed together, forms a permanent, one-piece, moisture-proof wire splice.

2.5 QUICK COUPLING VALVES:

A. Quick coupling valves shall be composed of a bronze cast body with a purple, (NP) cover.

B. The valve shall accept a single lug 3/4 inch bronze valve key for operation.

C. Provide one coupler and one hose swivel ell for every five quick coupling valves shown on the plans.

2.6 MANUAL VALVES:

A. Manual valves 2-1/2 inches and smaller shall be all brass, globe type with composition disc rated at 150 pounds W.O.G. Manual valve size 4” and larger shall be Kennedy cast iron type.

B. All valves shall have wheel handles unless cross handles are called for on the plan.

2.7 VALVE BOXES:

A. A box shall be provided for all valves.

B. Valve boxes shall be made of high-strength plastic suitable for turf irrigation purposes.

C. Boxes shall be suitable in size and configuration for the operability and adjustment of the valve.

D. Extension sections will be used as appropriate to the depth of piping.

E. All valve box covers shall bolt down or have locking mechanisms and shall be colored green or black as selected by the Contracting Officer.

2.8 POP-UP SPRAY, BUBBLERS AND ROTARY HEADS:

A. Sprinkler heads are specified on the drawings. Spray heads shall have a minimum 4 inch pop-up.

B. The sprinkler body and all related parts shall be plastic cycolac or polycarbonate. They shall have a spring retraction for positive return action of the pop-up nozzle.

C. The spring for retraction and the adjustable nozzle screw shall be made of corrosion resistant materials.

2.9 DRIPPERLINE WITH PRESSURE COMPENSATING EMITTERS

A. Dripperline shall be of nominal sized one-half (½") inch low density, ultra-violet-resistant, linear polyethylene tubing with internal pressure-compensating, continuous self-cleaning, integral drippers at a specified interval. The tubing shall be brown in color throughout and shall conform to an outside diameter (O.D.) of 0.66" and an inside diameter (I.D.) of 0.56". The dripperline shall be capable of a discharge rate of 0.4, 0.6, or 0.9 gallons per hour (GPH) between operating pressures of 7 - 70 psi for each individual dripper. The individual continuous self-cleaning, pressure compensating drippers shall be welded to the inside of the tubing wall. The drippers shall be constructed of three individual pieces:
   a. A black-colored dripper containing a filtration system on the inlet side, compensation cell, and recessed chamber with a water outlet.
   b. A hard plastic diaphragm retainer with color denoting discharge rate, with chamfered edges and a recessed groove in the center extending the full length of the diaphragm.
   c. A flexible elastomer diaphragm that allows pressure to build up within the chamber to purge sediment or other debris that may not have been captured by the disc filter.

B. Dripper spacings shall be available in the following on-center intervals - 12", 18", and 24".

2.9.1 BARBED INSERT FITTINGS

A. All barbed insert fittings shall be constructed of molded, ultra-violet-resistant, black colored plastic having a nominal inside dimension (I.D.) of 0.24"

B. Each fitting shall have a minimum of two ridges or barbs per outlet with a raised barb nearest the fitting outlet. All fittings shall be of one manufacturer and shall be available in one of the following end configurations:
   a. barbed insert fittings,
   b. male pipe threads (MPT) with barbed insert fittings, or
   c. female pipe threads (FPT) with barbed insert fittings.

2.10 ELECTRIC CONTROLLER:

A. Electric irrigation controller shall be capable of operating the number of stations as indicated on the drawings. The system is designed to operate two section valves at a time, per controller unless otherwise noted. The controller is specified on the drawings.

B. Power source shall be 110v A.C. Output for operation of companion solenoid actuated valves shall be 24 volts 60 Cycle AC.

C. Operation of the controller shall be full automatic, incorporating one 24 hour clock and 14 day calendar per controlled number of electric valves shown on the plan to start the sprinkling cycle any hour or hours of the day or night of any day or days over a repeating 14 day period.

D. The controller shall be capable of repeating watering cycles as required with a maximum delay between the ending of one cycle and the beginning of the next not to exceed 2 hours. Control shall provide optional semi-automatic operation whereby the automatic cycle may be started independent of the clock and manual operation whereby any station may be operated by hand independent of all timing mechanism. The choice of automatic day or hour programming shall be available to the operator on the face of the control panel without the use of tools.

E. The automatic controller shall be equipped with rainproof housing.

2.11 ELECTRIC REMOTE CONTROL VALVES:

A. Electric remote control valves shall have plastic bodies and covers and shall be globe-type diaphragm valves of normally closed design. The valves are specified on the drawings.

B. Operation shall be accomplished by means of integrally mounted heavy-duty 24-V DC solenoid complying with National Electrical Code, Class II Circuit. Solenoid coil shall be potted in epoxy resin within a plastic coated stainless steel housing. Solenoids shall be completely waterproof, suitable for direct underground burial.

C. A flow stem adjustment shall be included in each valve.

2.12 BACKFLOW PREVENTER (REDUCED PRESSURE TYPE):

A. A reduced pressure type backflow prevention assembly shall be located and sized as shown on the plans.

B. Construction shall be all brass for sizes 3/4 inch to 2 inches.

C. This assembly shall be installed in a box and shall conform to the City Plumbing Codes.

2.13 TEMPERATURE SENSORS & RAIN SENSORS:

A. Rain and freeze sensors shall be provided and installed as noted on the plans.

PART 3 - EXECUTION

3.1 INSTALLATION, GENERAL:

A. Design Pressure: This irrigation system has been designed to operate with a minimum static inlet water pressure as indicated on the drawings. The Contractor shall take a pressure reading prior to beginning construction. If the pressure reading is 5% less than above, the Contractor shall notify the Owner’s Representative.

B. Contractor Responsibility: The Contractor shall not willfully install the irrigation system as shown on the

drawings when it is obvious in the field that obstructions, grade differences or discrepancies in equipment usage, area dimensions or water pressure exist that might not have been considered in the engineering. Such obstructions or differences shall be brought to the attention of the Owner's Representative in writing. In the event this notification is not performed, the Contractor shall assume full responsibility for any revision necessary.

C. Staking: Before installation is started, place a stake or flag where each sprinkler is to be located, in accordance with drawing. Staking shall be approved by the Landscape Architect before proceeding.

D. Piping Layout: Piping layout is diagrammatic. Route piping around existing trees and root zones in such a manner as to avoid damage to plantings. Do not dig within the ball of newly planted trees or shrubs.

E. In areas where trees are present, trenches will be adjusted on site to provide a minimum clearance of four times the trunk diameter of the tree (at its base) between any tree and any trench.

F. All material and equipment shall be delivered to the Worksite in unbroken reels, cartons or other packaging to demonstrate that such material is new and of a quality and grade in keeping with the intent of these Specifications.

3.2 EXCAVATION AND TRENCHING:

A. The Contractor shall perform all excavation to the depth indicated in these Specifications and Contract drawings. The banks of trenches shall be kept as nearly vertical as practicable. Trenches shall be wide enough to allow a minimum of 4" between parallel pipelines or electrical wiring. Where rock excavation is required, or where stones are encountered in the bottom of the trench that would create a concentrated pressure on the pipe, the rock or stones shall be removed to a depth of six (6) inches minimum below the trench depth indicated. The over depth rock excavation and all excess trench excavation shall be backfilled with loose, moist earth or sand, thoroughly tamped. Whenever wet or otherwise unstable soil that is incapable of properly supporting the pipe is encountered in the trench bottom, such shall be removed to a depth and length required, and the trench backfilled to trench bottom grade as hereinafter specified, with course sand, fine gravel or other suitable material.

B. Bottom of trench grade shall be continued past ground surface deviations to avoid air pockets and low collection points in the line. The minimum cover specifications shall govern regardless of variations in ground surface profile and the occasional deeper excavation required at banks and other field conditions. Excavation shall be such that a uniform trench grade variation will occur in all cases where variations are necessary.

C. Trench excavation shall comprise the satisfactory removal and disposition of all materials, and shall include all shoring and sheeting required to protect the excavation and to safeguard employees.

D. During excavation, material suitable for backfilling shall be stockpiled in an orderly manner a sufficient distance back from edge of trenches to avoid overloading and prevent slides or cave-ins. Material unsuitable for backfilling shall be wasted as directed by the Owner's Representative. When excavated material is of a rocky nature and the topsoil or any other layer of excavated material is suitable for pipe bedding and backfill in the vicinity of the pipe, such material shall be separately stockpiled for use in such bedding and pipe backfill operations, unless satisfactory imported material is used.

E. All excavations and backfill shall be unclassified and covered in the basic bid. No additional compensation will be allowed for rock encountered.

F. Restore all surfaces, existing underground installations, etc., damaged or cut as a result of the excavations to their original conditions in a manner acceptable to the Owner's Representative.

3.3 PIPE INSTALLATION:

A. Sprinkler Mains: Sprinkler mains are that portion of piping from water source to electric valves. This portion of piping is subject to surges since it is a closed portion of the sprinkler system. Sprinkler mains shall be installed in a trench with a minimum of 18 inches of cover.

B. Lateral Piping: Lateral piping is that portion of piping from electrical valve to sprinkler heads. This portion of piping is not subject to surges since it is an "open end" portion of the sprinkler system. Lateral piping shall be installed in a trench with a minimum of 12 inches of cover.

3.4 PVC PIPE AND FITTING ASSEMBLY:

A. Solvent: Use only solvent recommended by manufacturer to make solvent-welded joints following standards noted herein. Thoroughly clean pipe and fittings of dirt, dust, and moisture with an approved PVC primer before applying solvent.

B. PVC to Metal Connection: Work metal connections first. Use a non-hardening pipe dope such as Permatex No. 2 or "Teflon" tape on threaded PVC to metal joints. Use only light wrench pressure.

C. Threaded PVC Connections: Where required, use threaded PVC adapters into which pipe may be welded.

D. Remove lumber, rubbish, and rocks from trenches. Provide firm, uniform bearing for entire length of each pipeline to prevent uneven settlement. Wedging or blocking of pipe will not be permitted. Remove foreign matter or dirt from inside of pipe before welding, and keep piping clean during and after laying pipe.

E. PVC pipe shall not be installed where there is water in the trench, nor shall PVC pipe be laid when temperature is 40 deg. F or below or when rain is imminent. PVC pipe will expand and contract as the temperature changes. Therefore, pipe shall be snaked from side to side of trench bottom to allow for expansion and contraction.

3.5 HYDROSTATIC TESTS:

Pressure Test: After the pipe is laid, the joints completed, and the trench partially backfilled, leaving the joints exposed for examination, the newly laid piping or any valved section of main pressure line piping shall, unless otherwise specified, be subjected for four hours to a hydrostatic pressure test of normal city water pressure. Each valve shall be opened and closed during the test. Enclosed pipe, joints, fittings, and valves shall be carefully examined during the partially open trench test. Joints showing visible leakage shall be replaced or

remade, as necessary. Cracked or defective pipe, joints, fittings, or valves discovered in consequence of this pressure test shall be repeated until the test results are satisfactory. All replacement and repair shall be at contractor's cost.

3.6 CONTROL WIRE INSTALLATION:

A. All control wire less than 500 feet in length shall be continuous without splices or joints from the controller to the valves. Connections to the electric valves shall be made within 18 inches of the valve using connectors specified in Paragraph 2.4 of this section, unless otherwise approved by the Owner's Representative in writing.

B. All control wires shall be installed at least 18 inches deep. Contractor shall obtain the Owner's Representative's approval for wire routing when installed in a separate ditch. Control wires may be installed in a common ditch with piping; however, wires must be installed a minimum of 4 inches below or to one side of piping.

C. All wire passing under existing or future paving, sidewalk, construction, etc., shall be encased in PVC Schedule 40 conduit extending at least 2 feet beyond edges of paving, sidewalks, or construction.

3.7 POP-UP SPRAY, BUBBLER HEADS:

A. Provide heads and nozzles as specified and install in locations as shown on the Contract Drawings.

B. Pop-up spray heads shall be installed on "flex" pvc as detailed on the Contract drawings. Rotary heads shall be installed on a double swing joint connected to the lateral pipe as detailed on the drawings.

C. Heads shall be installed with underside of flange flush with the finished grade.

D. Contractor will be required to adjust heads as necessary after establishment of grass or other plant material.

3.8 DRIP EQUIPMENT:

A.. Dripperline can be installed in one of the four following methods:

Over-excavation: Over-excavate the entire area to a depth of 2" to 4" below finish grade. Plant all specimen trees and shrubs 15 gallon size and larger, then place dripperline at the row spacing interval indicated on the plans.

Pipe Pulling: Where ground disruption is to be minimized, pneumatic tire, pipe-pulling machinery shall be used. Potholes shall be used at the ends of each run for making connection to supply and exhaust headers of rigid PVC pipe or polyethylene pipe.

Trenching: Hand or mechanically trench to the pipe depth indicated on the plans or in these specifications and backfill flush with finish grade. Avoid mechanically trenching within the dripline of existing trees. Hand-trench around existing tree roots when roots of 2" and larger are encountered.

Remove all rock 1½" and larger when excavating and remove from site. Do not backfill trenches with rock that will come in direct contact with tubing or rigid PVC piping.

B. Placement of Rigid PVC Piping: Install pipe in a serpentine (snaked) manner to allow for expansion and contraction in trench before backfilling. Install pipes at temperatures over 40° F. Pipe markings shall face upward out of the trench whenever possible.

C. Dripperline: Dripperline can be installed with the water outlets facing up, down, or sideways. In irregular areas, some water outlets could end up too close to fixed improvements and may have to be capped off with a dripper plug ring.

D. Cover: Install underground piping horizontally and as evenly as possible to a maximum depth of 4", unless otherwise specified. (Typical pipe depth is 2" shrub beds, 4" in turf unless periodic aeration is anticipated, and then pipe depth should be lowered to 6".)

E. Barbed Insert Fittings: Connect dripperline to barbed insert fittings by pushing the tubing on and over both barbs of the fitting until the tubing has seated against another piece of tubing or has butted against another portion of the barbed fitting. For water pressures in excess of the 30 psi, or the maximum stated system pressure for the dripperline, whichever is less, use stainless steel clamps as noted in paragraph 3.2.4, "Pipe Clamping" on all barbed fittings.

F. Pipe Clamping: When design-operating pressure exceeds 30 psi, or maximum stated system pressure for the dripperline, whichever is less, stainless steel pipe clamps shall be used. Slip clamps over tubing before slipping tubing over barbed insert fitting. Place clamp between the first and second ridge of the barbed fittings and crimp the "ear" of the clamp tightly. Crimp the "ear" twice to ensure proper seating.

3.8 QUICK COUPLING VALVES:

A. Quick coupling valves shall be installed with the underside of flange flush with the finished grade.

B. Quick coupling valves shall be installed on a swing joint assembly as detailed on the drawings.

C. Under the warranty, the Contractor shall return after grass is established and adjust valves and valve boxes to proper grade.

3.9 MANUAL VALVES:

A. Manual valves shall be sized and located where shown on the Contract drawings.

B. Valve boxes shall be adjusted to be flush with finished grade. The Contractor will be required to adjust after establishment of grass.

C. Valve boxes shall be properly supported and of sufficient construction that tractors and mowers crossing

over the boxes will not push boxes down and crush the pipe, valve, or box.

3.10 VALVE AND VALVE BOX PLACEMENT:

A. All manual, electric, and quick coupling valves shall be in boxes as specified in Paragraph 2.7 of this section, and shall be set with a minimum of six (6) inches of space between their top surface and the bottom of the valve box. The base of the box shall be filled with pea gravel as

B. Valves shall be fully opened and fully closed to ensure that all parts are in operating condition.

C. Valve boxes shall be set plumb, vertical, and concentric with the valve stem.

D. Any valve box which has moved from this required position so as to prevent the use of the operating wheel of the valve shall be reset by the Contractor at his own expense.

3.11 ELECTRIC CONTROLLER:

A. Electric controller shall be located as shown on the plans and shall be capable of operating the number of stations indicated.

B. The system is designed to operate two sections at a time, per controller, unless otherwise noted on the plans in strict accordance with the manufacturer's published installation instructions.

3.12 ELECTRIC REMOTE CONTROL VALVES:

A. Remote control valves shall be located and sized as shown on the plans. All electrical connections shall be made when the weather is dry with connection kits as specified in Paragraph 2.4 of this section in strict accordance with manufacturer's recommended procedures. All remote control valves shall be installed in a horizontal position, in accordance to the manufacturer's published installation instructions.

B. It shall be the responsibility of the Contractor to furnish and install the proper size wire on each of the low voltage circuits from the master control center to the various electric remote control valves.

C. Consideration shall be given to each circuit for allowance of voltage drop and economy consistent with accepted practices of electrical installation. Under no circumstances shall the voltage of any branch circuit be reduced more than proper due to length of run exceeding the maximum allowable for the wire size used.

3.13 BACKFILL AND COMPACTION:

A. After system is operating and required tests and inspections have been made, the trenches shall be carefully backfilled with the excavated materials approved for backfilling, consisting of earth, loam, sandy clay, sand, gravel, soft shale, or other approved materials, free from large clods of earth or stone. Rock, broken concrete, or pavement, and large boulders shall not be used as backfill material. The backfill shall be thoroughly compacted and evened with the adjacent soil level.

B. Compact trenches in areas to be planted by thoroughly flooding the backfill. Compact all other areas by

flooding or hand tamping. The jetting process may be used in areas when flooding.

C. Backfill for all trenches, regardless of the type of pipe covered, shall be compacted to a minimum of 90% density.

D. Any trenches improperly backfilled, or where settlement occurs, shall be reopened to the depth required for compaction, then refilled and compacted with the surface restored to the required grade and left in a completed surface condition as described above.

E. Specifically tamp backfill under heads and around the flange of heads for one foot (1') by a suitable means after trench backfill has dried from flooding to prevent heads loosening in the ground.

3.14 FINAL ADJUSTMENT:

A. After installation has been completed, make final adjustment of sprinkler system prior to Owner's Representative's final inspection.

B. Completely flush system to remove debris from lines by removing nozzle from heads on ends of lines and turning on system.

C. Check sprinklers for proper operation and proper alignment for direction of throw.

D. Check each section for operating pressure and balance to other sections by use of flow adjustment on top of each valve.

E. Check nozzling for proper coverage. Prevailing wind conditions may indicate that arc or angle of spray should be other than as shown on drawings. In this case, change nozzles to provide correct coverage and furnish record data to Owner's Representative with each change.

F. After system is thoroughly flushed and ready for operation, each section of sprinklers shall be adjusted to control pressure at heads. Use the following method, one section at a time:

1. Remove last head on section and install a temporary riser above grade. Install tee with pressure gauge attached on top of riser and re-install head with nipple onto tee.
2. Correct operating pressure at last head of each section as follows: Spray Heads - 30-35 psi.
3. After replacing head, at grade, tamp thoroughly around head.
4. Drip zone valve pressure regulating devices shall be set at not to exceed 40 psi.

3.15 CLEAN-UP:

A. The Worksite shall be thoroughly cleaned of all waste materials and all unused or salvaged materials, equipment, tools, etc.

B. After completion of the work, areas disturbed shall be leveled and the Worksite shall be raked clean and left in an orderly condition.

END OF SECTION 328000

SECTION 32 91 19.1 3 -

TOPSOIL PART 1 - GENERAL

1.1 SCOPE OF WORK

A. Work shall include all materials, labor, equipment, transportation, and services necessary to furnish and place topsoil for finish grading, seeding, sodding, and planting as shown on the drawings and as specified herein.

1.2 QUALITY ASSURANCE

A. Contractor to attend a pre-installation meeting and participate in an installation meeting with Owners Representative.

PART 2 – MATERIALS

2.1 TOPSOIL

A. Provide topsoil which is fertile, friable, natural loam, surface soil, free of subsoil, clay lumps, brush, weeds and other litter, and free of roots, stumps, stones larger than 2 inches in any dimension and other extraneous or toxic matter harmful to plant growth.

B. Obtain topsoil only from naturally, well-drained sites where topsoil occurs in a depth of not less than 4 inches. Topsoil shall not be collected from sites that are infected with growth of, or the reproductive parts of noxious weeds, especially nut grass. Topsoil shall not be stripped, collected or deposited while wet. Topsoil shall not be excessively acid or alkaline or contain toxic substances which may be harmful to plant growth. Topsoil shall be without admixture of subsoil.

PART 3- EXECUTION

3.1 EXAMINATION

A. Excavation and subgrade shall be checked and verified that they have been completed to correct lines and grades.

3.2 INSTALLATION

A. Topsoil installment is to be coordinated to coincide with irrigation placement, and is to be spread according to plan grades.

3.3 CLEAN UP

A. Spilled topsoil shall be removed from paved areas, curbs, gutters, etc. As operations proceed all excess soil and debris shall not be allowed to accumulate, but shall be removed daily and the site kept as clean as possible.

3.4 PROTECTION

A. Topsoil shall be protected from wind and water erosion until planting is completed.

END OF SECTION 32 91 19.13

SECTION 32 92 13 - HYDRO-MULCH

SEEDING PART 1 - GENERAL

1.1 DESCRIPTION

A. The work covered by this section consists of furnishing all plant, labor, materials, equipment, supplies, supervision and tools and performing all work necessary to top soiling, smoothing, seeding, fertilizing, watering maintenance and cleanups of side slopes, all in accordance with these specifications.

B. The hydro-mulch seeding operations, together with all necessary related work, shall conform to the requirements specified in this section. The area(s) to be hydro-mulch seeded shall be noted in the construction documents.

1.2 MEASUREMENT & PAYMENT

A. No separate measurement or payment will be made for materials and labor performed under this section. Include all costs in the lump sum price.

PART 2 – PRODUCTS

2.1 MATERIALS

A. All seed must meet the requirements of the U.S. Department of Agriculture Rules & Regulations as set forth in the Federal Seed Act and the Texas Seed Law.

B. Type of seed, purity and germination requirements, rate of application and planting dates are as follows:

TABLE I

Type	Application Rate Pounds per Acre	Planting Date
Hulled Common Bermuda Grass 98/88	40	Jan. 1 to Apr. 15
Unhulled Common Bermuda Grass 98/88	40	Jan. 1 to Apr. 15
Annual Rye Grass, including Gulf	50	Jan. 1 to Apr. 15
Hulled Common Bermuda Grass 98/88	40	Apr. 15 to Oct. 1
Hulled Common Bermuda Grass 98/88	40	Oct. 1 to Jan. 1
Unhulled Common Bermuda Grass 98/88	40	Oct. 1 to Jan. 1

C. Fertilizer shall be water soluble with an analysis of 10 percent nitrogen, 20 percent phosphoric acid and 10 percent potash. Rate of application shall be 500 pounds per acre, except during the period of April 15 through September 1, when the rate shall be reduced to 400 pounds per acre. The fertilizer shall be delivered to the site in bags or other convenient containers, each fully labeled, conforming to the applicable State Fertilizer Laws and bearing the name and warranty of the producer.

D. Mulch shall be virgin wood cellulose fiber made from whole wood chips. Within the fiber mulch material, at least 20 percent of the fibers will be 10.7mm in length and 0.27mm in diameter. Rate of application shall be 2000 pounds per acre. Soil Stabilizers such as Terra Type III (or approved equal) shall be applied at a rate of 40 pounds per acre on side slopes and Terra Tack I (or approved equal) shall be applied at a rate of 40 pounds per acre on flatter portions.

E. Wood cellulose fiber mulch, for use in the grass seed and fertilizer, shall be processed in such a manner that it will not contain germination or growth inhibiting factors. It shall be dyed an appropriate color to allow visual metering of its application. The wood cellulose fibers shall have the property of becoming evenly dispersed and suspended when agitated in water. When sprayed uniformly on the surface of the soil, the fibers shall form a blotter-like ground cover, which readily absorbs water and allows infiltration to the underlying soil. Weight specifications from suppliers for all applications shall refer only to the underlying soil. Weight specifications from suppliers, shall refer only to the air-dry weight of the fiber. The mulch material shall be supplied in packages having a gross weight not in excess of 100 pounds and must be marked by the manufacturer to show the dry weight content. Suppliers shall be prepared to certify that laboratory and field testing of their product has been accomplished and that it meets all of the foregoing requirements.

F. Water shall be free from oil, acid, alkali, salt and other substances harmful to the growth of grass. The water source shall be subject to approval, prior to use.

PART 3 – EXECUTION

3.1 INSTALLATION

A. Immediately after the finished grade has been approved, begin hydro-mulching operations to reduce erosion and excessive weed growth.

B. Hydraulic equipment used for the application of fertilizer, seed and slurry of prepared wood fiber mulch shall have a built-in agitation system with an operating capacity sufficient to agitate, suspend and homogeneously mix a slurry containing up to forty (40) pounds of fiber plus a combined total of 70 pounds of fertilizer solids for each 100 gallons of water. The slurry distribution lines shall be large enough to prevent stoppage. The discharge line shall be equipped with a set of hydraulic spray nozzles, which provide even distribution of the slurry on the area to be seeded. The slurry tank shall have a minimum capacity of 800 gallons and shall be mounted on a traveling unit, which may either be self-propelled or drawn with a separate unit which will place the slurry tank and spray nozzles within sufficient proximity to the areas to be seeded, so as to provide uniform distribution without waste. The Engineer may authorize equipment with a smaller tank capacity, provided the equipment has the necessary agitation system and sufficient pump capacity to spray the slurry in a uniform coat.

C. Care shall be taken that the slurry preparation take place on the site of the work. The slurry preparation should begin by adding water to the tank when the engine is at half throttle. When the water level has reached the height of the agitator shaft, good re-circulation shall be established and seed shall be added. Fertilizer shall then be added, followed by wood pulp mulch. The wood pulp mulch shall only be added to the mixture after the seed and when the tank is at least one-third filled with water. The engine throttle shall be opened to full speed when the tank is half filled with water. All the wood pulp mulch shall be added by the time the tank is

two-third to three-fourths full. Spraying shall commence immediately when the tank is full. The operator shall spray the area with a uniform visible coat, by using the green color of the wood pulp as a guide.

3.2 APPLICATION

A. The Contractor shall obtain approval of hydro-mulch area preparation from the Engineer prior to application.

B. Operators of hydro-mulching equipment shall be thoroughly experienced in this type of application. Apply the specified slurry mix in a motion to form a uniform mat at the specified rate. Operators shall keep the hydro-mulch within the areas designated and keep from contact with other plant material. Immediately after application, thoroughly wash off any plant material, planting areas or paved areas not intended to receive slurry mix.

C. Keep all paved and planting areas clean during maintenance operations. Contractor shall keep hydro-mulching within the areas designated and keep from contact with other plant material.

D. If in the opinion of the Engineer, unplanted skips and areas are noted after hydro-mulching, the Contractor shall be required to seed the unplanted areas with the grasses that were to have been planted at no additional cost to the Owner.

3.3 CONTRACTOR'S MAINTENANCE AND GUARANTEE PERIOD

A. The hydro-mulch seeding shall be adequately watered until established. Any areas damaged by erosion or areas that do not have any acceptable turfing shall be redone to the satisfaction of the Engineer. Maintenance of grass areas shall be for 60 days after the completion of the project and shall consist of watering, weeding, repair of all erosion and reseeding, as necessary to establish a uniform stand of the specified grasses. The Contractor shall guarantee growth and coverage of hydro-mulch planting under this contract to the effect that a minimum of 95% of the area planted will be covered with the specified planting after 60 days.

B. Prior to final acceptance, the Contractor shall be responsible for one (1) mowing per month between the months of April to September and shall mow every thirty (30) days plus or minus five (5) after the initial mowing. The Contractor shall also be responsible for one (1) mowing every six (6) weeks between the months of October to March. In addition, the Contractor shall water the entire sodded and hydro-mulched areas to a saturated depth of one (1) inch at least once a week between the months of April to September and at least once a month between the months of October to March.

C. The Contractor shall make a second application of specified hydro-mulch planting to those bare areas not meeting specified coverage as determined by the Engineer. Such replanting is to be performed within 60 days of initial application and upon notification by the Engineer to replant.

D. The Contractor shall apply top dress fertilizer (delayed action), at the rate of 10 pounds per 1000 square feet at 25 days after hydro-mulching of all new lawn areas.

E. Top dress fertilizer shall be 16-6-8.

END OF SECTION 32 92 13

SECTION 32 92 23 - FERTILIZER

CONDITIONS OF THE CONTRACT AND DIVISION 1, as applicable, apply to this Section.

PART 1 – GENERAL

1.1 DESCRIPTION

A. Fertilizing shall consist of providing and distributing fertilizer over such areas as are designated for block sodding or seeding, for erosion control, and in accordance with these specifications.

1.2 MEASUREMENT

A. Acceptable material for "Fertilizer" will be measured by the C-WT (100 lbs) as determined by approved scales or guaranteed weight of sacks shown by manufacturer.

1.3 PAYMENT

A. No separate payment shall be made for materials furnished or work performed under this Section. Include the cost of same in the contract price bid for work of which this is a component part.

PART 2 – PRODUCTS

2.1 MATERIALS

A. All fertilizer used shall be delivered in bags or containers clearly labeled showing analysis. A pelleted or granulated fertilizer shall be used with an analysis of 10-10-5, unless otherwise specified. The figures in the analysis represent the nitrogen, phosphoric acid and potash nutrients respectively as determined by the methods of the Association of Official Agricultural Chemists. The sources of nitrogen in the fertilizer shall be roughly balanced between ammonical (quick release) and nitrate nitrogen (slow release).

B. With permission of the Engineer, fertilizer of a different analysis may be substituted. It shall be pelleted or granulated fertilizer with a lower concentration. The total amounts of nutrients furnished and applied per acre shall equal or exceed that specified for each nutrient.

PART 3 – EXECUTION

3.1 CONSTRUCTION METHODS

A. When fertilizer is included in the specifications, pelleted or granulated fertilizer shall be applied uniformly over the area specified to be fertilized and in the manner directed for the particular item of work. Fertilizer shall be dry and in good physical condition. Fertilizer that is powdered or caked will be rejected. Distribution of fertilizer for the particular item of work shall meet the approval of the Engineer.

B. Unless otherwise indicated on the plans, fertilizer shall be applied uniformly at the average rate of 480 pounds per acre when "Sodding for Erosion Control", and 400 pounds per acre when "Seeding for Erosion Control".

END OF SECTION 32 92 23

SECTION 32 92 23.16 - SOLID SODDING

CONDITIONS OF THE CONTRACT AND DIVISION 1, as applicable, apply to this Section.

PART 1 – GENERAL

1.1 DESCRIPTION

A. Solid Sodding for erosion control shall consist of providing and planting Bermuda grass, or other acceptable sod along or across such areas as are designated on the plans and in accordance with the specification requirements herein outlined.

1.2 MEASUREMENT AND PAYMENT

A. No separate measurement or payment will be made for materials and labor performed under this section. Include all costs in the lump sum price.

PART 2 – PRODUCTS

2.1 MATERIALS

A. The sod shall consist of live, growing Bermuda grass (ninety-five percent pure), secured from sources where the soil is fertile and has been fumigated. Bermuda sod shall have a healthy virile root system of dense, thickly matted roots throughout and grown in a sandy loam soil consisting of a minimum of 60% sand. Sod grown in fat clayey materials are not acceptable. The sod shall be cut from the field so that there is a minimum of one-half inch of soil on the roots of the sod, and so that no roots show on the bottom of the soil. Sod shall be dense, with the grass having been mowed to 1-inch height before lifting from the field. Sod shall be in a vigorous condition, dark green in color, free of disease and harmful insects. The contractor shall not use sod from areas where the grass is thinned out, nor where the grass roots have been dried out by exposure to the air and sun to such an extent as to damage it stability to grow when transplanted. The sod shall be free from obnoxious weeds or other grasses and shall not contain any matter deleterious to its growth or which might affect its subsistence or hardiness when transplanted. Unless the area has been closely pastured, it shall be closely mowed and raked to remove all weeds and long-standing stems.

B. Care shall be taken at all times to retain the native soils on the roots of the sod during the process of excavation, hauling and planting. Sod material shall be kept moist from the time it is dug, until planted. When so directed by the Engineer, the sod existing at the source shall be watered to the extent required, prior to excavating. Do not stack sod for more than 36 hours between the time of cutting and the time of installation. The Engineer reserves the right to reject any sod deemed unacceptable for installation.

C. All planting shall be done between the average date of the last freeze in the spring and six weeks prior to the average date for the first freeze in the fall, according to the U.S. Weather Bureau.

D. Fertilizer shall conform to the requirements of SECTION 32 92 23 - FERTILIZER and shall be applied at the rate of 480-pounds per acre.

PART 3 – EXECUTION

3.1 CONSTRUCTION METHODS

A. Immediately after the finished grade has been approved, begin sodding operations to reduce excessive weed growth. If the sod bed is dry immediately prior to sod installation, dampen the surface with a fine mist of water.

B. Grass shall be turf sod, cut into approximately 18 inch wide by 24-inch long pieces, or 18 inch wide by continuous length rolls.

C. All areas to be sodded shall be raked to true lines, free from all unsightly variations, bumps, ridges or depressions. All sticks, stones, roots or other objectionable material, which might interfere with the formation of a finely pulverized seedbed, shall be removed from the soil.

D. Lay sod so that adjacent strips butt tightly, with no spaces between strips. Lay sod on mounds and slopes, with strips parallel to contours. Stagger joints. Tamp and roll the sod thoroughly to make contact with the sod bed, or as directed by the Engineer.

E. Peg sod on slopes three to one or steeper with pegs driven through sod into soil, until pegs are flush with the turf. Space pegs 18 inches on center. Pegs to be 1 inch square, 6 inches long or, 6-inch lengths of lath. Commercial fertilizer as outlined in SECTION 32 92 23 - FERTILIZER shall be applied to the entire sodded area at the prescribed rates, immediately following laying of the sod. Immediately after fertilizing, water the entire area to a saturated depth of 2-inches.

F. Immediately after installation of the sod, remove sod clumps on soil, wash off any plant materials and pavements not to have sod. Edges along curbs and drives, walkways, etc., shall be carefully trimmed and maintained until accepted.

3.2 CONTRACTOR'S MAINTENANCE AND GUARANTEE PERIOD

A. Maintenance of sodded areas shall be for 60 days after completion of the project and shall consist of watering, weeding, repair of all erosion and resodding as necessary to establish a uniform growth of the specified grass. The Contractor shall guarantee growth and coverage of the sod planted under this contract to the effect that a minimum of 95% of the area planted will be covered with the specified planting after 60 days. Sod panels that are dead or dying shall be replaced.

B. The Contractor shall be responsible for one mowing, in the event that the time between sodding and final acceptance exceeds thirty days.

C. The Contractor shall make a second planting to those bare areas not meeting specified planting as determined by the Engineer. Such replanting is to be performed within 90 days of initial application and upon notification by the Engineer to replant.

END OF SECTION 32 92 23.16

BATES ALLEN PARK
BLACK COWBOY
MUSEUM

630 CHARLIE ROBERTS LANE

KENDLETON, TX. 77451

ARCHITECT
VCS Architects
19251 PURUS DRIVE
Porter, Texas 77365
Phone: 281.271.7116

CIVIL
WECS Engineers
4611 Biggam Drive
Fresno, Texas 77545
Phone: 832.443.4150

STRUCTURAL
rza + McLain
313 Southwest Freeway
ite 163
garland, Texas 77478
Phone: 281.494.1230

ELECTRICAL
Source2Load Engineering
800 Town & Country Blvd.
Houston, Texas 77024
Phone: 713.497.5114

MECHANICAL
Source2Load Engineering
800 Town & Country Blvd.
Houston, Texas 77024
Phone: 713.497.5114

PLUMBING
Source2Load Engineering
800 Town & Country Blvd.
Houston, Texas 77024
Phone: 713.497.5114

VCS architects
19251 Purus Dr.
Porter, TX 77365

CONSULTANTS

BATES ALLEN PARK
BLACK COWBOY MUSEUM
630 CHARLIE ROBERTS LANE
KENDLETON TX. 77451

REGISTERED ARCHITECT
ROSEMARY MARK
STATE OF TEXAS
9/20/24

Drawing Date: 06/03/2024
Drawn By: SMA
Checked By: DDV
Scale: AS NOTED

Revisions:

DESCRIPTION	
ISSUE FOR BID & CONSTRUCTION	09/23/2024

Drawing Name

COVER SHEET

A-000

10/21/2014 10:44:43 AM

A/C	AIR CONDITION
ACOUS	ACOUSTIC, ACOUSTICAL
AD	AREA DRAIN
ADH	ADHESIVE
ADJ	ADJACENT OR ADJUSTABLE
ADMIN	ADMINISTATIVE, ADMINISTRATION
AFF	ABOVE FINISH FLOOR
ALUM	ALUMINUM
ALT	ALTERNATE
ANOD	ANODIZED
AP	ACCESS PANEL
APPROX	APPROXIMATED
ARCH	ARCHITECT, ARCHITECTURAL
ASPH	ASPHALT
AUTO	AUTOMATIC
AUX	AUXILARY
AVG	AVERAGE
BD	BOARD
BLDG	BUILDING
BK	BRICK
BLK(G)	BLOCK(ING)
BM	BEAM
BOL	BOLLARD
BOT	BOTTOM
BRKT	BRACKET
BSMT	BASEMENT
BU(R)	BUILT-UP ROOF
BVL	BEVELED
CAB	CABINET
CC	CENTER TO CENTER
CEM	CEMENT
CER	CERAMIC
CG	CORNER GUARD
CHBD	CHALKBOARD
C.I.	CAST IRON
CIP	CAST IN PLACE
CJT	CONTROL JOINT
CJ	CONSTRUCTION JOINT
CL	CENTER LINE
CLG	CEILING
CLO OR CLOS	CLOSET
CLR	CLEAR
CLS	CLOSURE
CLWG	CLEAR WIRE GLASS
CMJ	CONCRETE MASONRY UNIT
CO	CLEAN OUT
COL	COLUMN
COMB	COMBINATION
COMP	COMPACT
COMPR	COMPRESS, COMPRESSIBLE
CONC	CONCRETE
CONN	CONNECT, CONNECTION
CONT	CONTINUOUS, CONTINUATION
CONTR	CONTRACTOR
CORR	CORRIDOR
CPT	CARPET
CER.T.	CERAMIC TILE
CTR	COUNTER
CFCI	CONTRACTOR FURNISH CONTRACTOR INSTALL
DBL	DOUBLE
DEPT	DEPARTMENT
DET	DETAIL
DIA	DIAMETER
DIAG	DIAGONAL
DIM	DIMENSION
DIV	DIVISION
DW	DOWN
DO	DITTO
DP	DAMPPROOFING
DR	DOOR
DS	DOWNSPOUT
DW	DISHWASHER
DWG	DRAWING
DWR	DRAWER
DF	DRINKING FOUNTAIN
E	EAST
EA	EACH
EJC	EXPANSION JOINT COVER
EJT	EXPANSION JOINT
EL OR ELEV	ELEVATION
ELEV	ELEVATOR
ELEC	ELECTRIC, ELECTRICAL
EMER	EMEGENCY
ENCL	ENCLOSURE
ENGR	ENGINEER
ENT	ENTRANCE
E.D.F.	
EQ	EQUAL
EWC	ELECTRIC DRINKING FOUNTAIN
EQUIP	EQUIPMENT
EST	ESTIMATE
EW	EACH WAY
EXH	EXHAUST
EXIST	EXISTING
EXP	EXPOSED OR EXPANSION
EXT	EXTERIOR
FD	FLOOR DRAIN
FDN	FOUNDATION
FE	FIRE EXSTINGUISHER
FEC	FIRE EXSTINGUISHER CABINET
F TO F	FACE TO FACE
FF	FINISHED FLOOR
FHC	FIRE HOSE CABINET
FIN	FINISH OR FINISHED
FIXT	FIXTURE
FL(G) OR FLR	FLOOR(ING)
FLUOR	FLUORESCENT
FP	FIREPROOF
FT	FOOT, FEET
FURN(C)	FURNISH(ED)
GA	GAUGE
GALV	GALVINIZED
GC	GENERAL CONTRACTOR
GEN	GENERATOR
GEN'L	GENERAL
GL	GLASS OR GLAZING
GYP	GYPSUM
HB	HOSE BIBB
HDW	HAND DRYER
HGR	HANGER
HGT	HEIGHT
HM	HOLLOW METAL
HORIZ	HORIZONTAL
HPT	HIGH POINT
HR	HOUR
HW	HOT WATER
HVAC	HEATING, VENTILATION & AIR CONDITIONING

ID	INSIDE DIAMETER
INCAN	INCANDESCENT
INCL	INCLUSIVE, INCLUDE
INFO	INFORMATION
INSUL	INSULATION
INT	INTERIOR
LAB	LABORATORY
LAM	LAMINATE, LAMINATED
LAV	LAVATORY
LB(S)	POUND
LDG	LANDING
L	LONG, LENGTH
LH	LEFT HAND
LKR	LOCKER
LOC	LOCATION
LP	LOW POINT
LT(G)	LIGHT(ING)
LVR	LOUVER
MACH	MACHINE
MAINT	MAINTENANCE
MAS	MASONRY
MATL	MATERIAL
MAX	MAXIMUM
MECH	MECHANICAL
MET	METAL
MFG	MANUFACTURER
MH	MANHOLE
MIN	MINIMUM
MO	MASONRY OPENING, MOTOR OPERATED
MTG	MOUNTING (MOUNTED)
MUL	MULLION
MWK	MILLWORK
MWP	MEMBRANE WATERPROOFING
MTL	MATERIAL, METAL
N	NORTH
NA	NOT APPLICABLE
NFPA	NATIONAL FIRE PROTECTION ASSOC.
NIC	NOT IN CONTRACT
NTS	NOT TO SCALE
OC	ON CENTER
OD	OUTSIDE DIAMETER
OFF	OFFICE
OPH	OPPOSITE HAND
OPNG	OPENING
OPP	OPPOSITE
OFCI	OWNER FURNISH CONTRACTOR INSTALLED
PART	PARTITION
PBO	PARTICLE BOARD
PERF	PERFORATE, PERFORATED
PL	PLATE
PLAS	PLASTER
PLAS, LAM	PLASTIC LAMINATE
PLYWD	PLYWOOD
PLBG	PLUMBING
PNL	PANEL
PR	PAIR
PREP	PREPARATION
PT(D)	PAINT(ED)
PVC	POLY-VINYL CHLORIDE
PVMT	PAVEMENT
PART	PARTITION
PL	PLATE
PLAS	PLASTER
PLAS, LAM	PLASTIC LAMINATE
PLYWD	PLYWOOD
PLBG	PLUMBING
PR	PAIR
PREP	PREPARATION
PT(D)	PAINT(ED)
PVC	POLY-VINYL CHLORIDE
PVMT	PAVEMENT
RA	RETURN AIR
RCVG	RECEIVING
RD	ROOF DRAIN
RE	REFER, REFERENCE
RECEP	RECEPTION
RECPT	RECEPTABLE
REFL	REFLECTED
REINF	REINFORCE, REINFORCING
REQD	REQUIRED
RESL	RESILIENT
RET	RETURN
REV	REVISION
RM	ROOM
RND	ROUND
RO	ROUGH OPENING
RR	RETURN REGISTER
RTD	RATED
RB	RESILIENT BASE
SCHED	SCHEDULE
SECT	SECTION
SIM	SIMILAR
SL	SLOPE
SQ	SQUARE
SPEC	SPECIFICATIONS
SPKR	SPEAKER
ST	STREET
SS	STAINLESS STEEL
STA	STATION
STC	SOUND TRANSMISSION CLASS
STD	STANDARD
STL	STEEL
STRUC	STRUCTURAL
SUP	SUPPORT
SUSP	SUSPENDED
TOC	TOP OF CURB
TEL	TELEPHONE
TEMP	TEMPERATURE
TZ	TERRAZZO
THK	THICK(NESS)
THR	THRESHOLD
TOS	TYPICAL
TYP	TOP OF STEEL, TOP OF SLAB
UL	UNDERWRITERS LABORATORY
UON	UNLESS OTHERWISE NOTED
UTIL	UTILITY
VCT	VINYL COMPOSITION TILE
VWC	VINYL WALL COVERING
W	WIDTH, WEST, WASHER
W/O	WITHOUT
WC	WATER CLOSET
WD	WOOD

ABBREVIATIONS

COMMON BRICK

STRUCTURAL CLAY TILE

CONCRETE MASONRY UNITS

CAST OR CUT STONE

CONCRETE

EARTH

GRAVEL

SAND

WOOD(ROUGH)

WOOD(BLOCKING)

PLYWOOD

TERRAZZO

CEMENT TOPPING

RIGID INSULATION

EXTRUDED SHAPES

BREAK METAL SHAPES

BATT OR BLANKET INSULATION

CORK OR COMPOSITE

RUBBER OR NEOPRENE

STEEL IN SECTION

BRASS OR BRONZE

STAINLESS STEEL OR ALLUMINUM

SHEET METAL (ALL METALS SMALL SCALE)

CERAMIC TILE

QUARRY TILE

RESILIENT TILE

CARPET & PAD

PLASTER ON METAL LATH

GYPSUM BOARD

INSULATED PARTITION SOUND OR THERMAL

WOOD FRAME PARTTITION

MATERIAL LEGEND

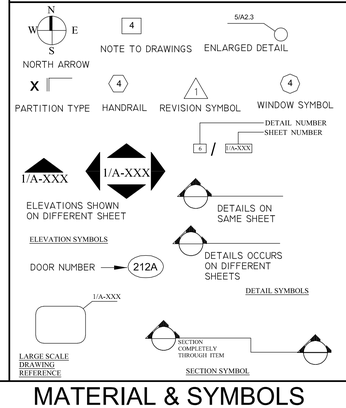

MATERIAL & SYMBOLS

SHEET NUMBER	SHEET NAME
GENERAL	
A-000	COVER SHEET
A-001	INDEX, CODE & PROJECT INFO.
A-002	GUIDELINES FOR COMPLIANCE WITH TAS
A-003	ARCHITECTURAL - OVERALL LIFE SAFETY PLAN
CIVIL	
C0.1	CIVIL CONSTRUCTION NOTES
C0.2	CIVIL CONSTRUCTION NOTES
C1.0	CIVIL TOPOGRAPHICAL MAP
C2.0	CIVIL DEMOLITION PLAN
C2.1	CIVIL DEMOLITION PLAN
C3.0	CIVIL SITE PLAN
C4.1	CIVIL DRAINAGE AREA PLAN
C4.2	CIVIL DRAINAGE AREA PLAN
C4.3	CIVIL DRAINAGE CALCULATIONS
C4.3	CIVIL DETENTION POND PLAN AND PROFILE
C5.0	CIVIL PAVING AND GRADING
C6.0	CIVIL SITE UTILITY PLAN
C7.0	CIVIL STORM WATER POLLUTION PREVENTION PLAN
C8.0	CIVIL STANDARD DETAILS
C8.1	CIVIL STANDARD DETAILS
C8.2	CIVIL STANDARD DETAILS
C8.3	CIVIL STANDARD DETAILS
C8.4	CIVIL STANDARD DETAILS
C8.5	CIVIL STANDARD DETAILS
LANDSCAPE	
L-101	LANDSCAPE - OVERALL SITE PLAN
L-102	LANDSCAPE - PLANTING NOTES AND DETAILS
STRUCTURAL	
S0.01	STRUCTURAL GENERAL NOTES
S0.02	STRUCTURAL GENERAL NOTES
S1.01	STRUCTURAL FOUNDATION PLAN
S1.02	STRUCTURAL MEZZANINE PLAN
S1.03	STRUCTURAL ROOF PLAN
S3.00	STRUCTURAL STAIR PLAN AND DETAILS
S4.00	STRUCTURAL TYPICAL FOUNDATION DETAILS
S4.01	STRUCTURAL TYPICAL FOUNDATION DETAILS
S4.02	STRUCTURAL TYPICAL FOUNDATION DETAILS
S4.05	STRUCTURAL FOUNDATION DETAILS
S4.06	STRUCTURAL FOUNDATION DETAILS
S4.15	STRUCTURAL TYPICAL WALL DETAILS
S4.16	STRUCTURAL TYPICAL WALL DETAILS
S4.20	STRUCTURAL TYPICAL FLOOR DETAILS
S4.21	STRUCTURAL TYPICAL FLOOR DETAILS
S4.30	STRUCTURAL STEEL DETAILS
S4.35	STRUCTURAL ROOF DETAILS
S4.40	STRUCTURAL STEEL FRAME DETAILS
S4.41	STRUCTURAL BRACE ELEVATION DETAILS
ARCHITECTURE	
AS-100	ARCHITECTURAL OVERALL SITE PLAN
AS-101	ARCHITECTURAL ENLARGED SITE PLANS,ELEVATIONS & DETAILS
AS-102	ARCHITECTURAL ENLARGED SITE PLANS,ELEVATIONS & DETAILS
A-101	ARCHITECTURAL FIRST AND SECOND FLOOR PLANS
A-102	ARCHITECTURAL FIRST AND SECOND FLOOR RCP'S
A-103	ARCHITECTURAL OVERALL ROOF PLAN
A-201	ARCHITECTURAL EXTERIOR ELEVATIONS
A-202	ARCHITETURAL EXTERIOR ELEVATIONS
A-301	ARCHITECTURAL BUILDING SECTIONS
A-311	ARCHITECTURAL WALL SECTIONS
A-312	ARCHITECTURAL WALL SECTIONS
A-401	ARCHITECTURAL ENLARGED PLANS AND ELEVATIONS
A-402	ARCHITECTURAL ENLARGED STAIR PLANS & SECTIONS
A-501	ARCHITECTURAL DETAILS
A-511	ARCHITECTURAL DETAILS
A-512	ARCHITECTURAL DETAILS
A-601	ARCHITECTURAL PARTITION SCHEDULE AND DETAILS
A-602	ARCHITECTURAL WALL PARTITION DETAILS
A-611	ARCHITECTURAL DOOR SCHEDULE & DETAILS
A-621	ARCHITECTURAL WINDOW SCHEDULE
A-681	ARCHITECTURAL FINISH SCHEDULE AND DETAILS
SIGNAGE	
SG-001	SIGNAGE & GRAPHICS PROJECT INFORMATION
SG-101	SIGNAGE & GRAPHICS OVERALL FIRST & SECOND FLOOR PLANS
SG-201	SIGNAGE & GRAPHICS SIGN 1010 SIGNAGE DETAILS
SG-202	SIGNAGE & GRAPHICS SIGN 1020 & 2021 SIGNAGE DETAILS
SG-203	SIGNAGE & GRAPHICS SIGN 1022, 1023 & 2024 SIGNAGE DETAILS
SG-204	SIGNAGE & GRAPHICS SIGN 1025, 1026 & 2027 SIGNAGE DETAILS
SG-205	SIGNAGE & GRAPHICS SIGN 1028, 1029 & 2030 SIGNAGE DETAILS

SHEET INDEX

SHEET NUMBER	SHEET NAME
MECHANICAL	
M.001	MECHANICAL SPECIFICATIONS
M.002	MECHANICAL HVAC DESIGN PLAN - LEVEL 1
M.003	MECHANICAL HVAC DESIGN PLAN - LEVEL 2
M.004	MECHANICAL SCHEDULES
M.005	MECHANICAL DETAILS
M.005.1	MECHANICAL DETAILS
M.006	MECHANICAL ACCU-1 DETAILS
M.007	MECHANICAL ACCU-1 DETAILS
ELECTRICAL	
SE.1	PHOTOMETRIC STUDY PLAN
SE.2	SITE LIGHTING PLAN
SE.3	PHOTOMETRIC DATA
SE.4	LIGHTING FIXTURE CATALOG
SE.5	LIGHTING FIXTURE CATALOG
E.001	ELECTRICAL SPECIFICATIONS
E.002	ELECTRICAL LIGHTING PLAN
E.003	ELECTRICAL POWER PLAN
E.004	ELECTRICAL SCHEDULES AND ONE-LINE DIAGRAM
PLUMBING	
P.001	PLUMBING SPECIFICATIONS
P.002	PLUMBING WATER PLAN - LEVEL 1
P.003	PLUMBING WATER PLAN - LEVEL 2
P.004	PLUMBING SANITARY AND WASTE VENT - LEVEL 1
P.005	PLUMBING SANITARY AND WASTE VENT - LEVEL 2
P.006	PLUMBING RISER DIAGRAM
P.007	PLUMBING DETAILS
P.007.1	PLUMBING GREASE TRAP DETAILS
P.008	PLUMBING GREASE TRAP DETAILS
P.008.1	PLUMBING SAMPLE WELL DETAILS
P.009	PLUMBING SAMPLE WELL DETAILS

SHEET INDEX

PROJECT: BLACK COWBOY MUSEUM

LOCATION: CHARLIE ROBERTS LANE
EAST BERNARD, TEXAS 77451

I.Applicable

2015 International Building Code
2020 National Electrical Code
2015 National Energy Conservation Code
2015 Uniform Mechanical Code
2015 Uniform Plumbing Code

II. Occupancy Classifications

Group A-2 (Assembly)
Group R-3 (Dwelling Unit)
Group B (Office)

III. Separatıon Walls (Sectıon 420.2)

Walls separating sleeping units in the same building and walls separating sleeping units from other occupancies contiguous to them in the same building shall be constructed as a fire partition in accordance with Section 708.

708.3 Fire-resistance rating. Fire partitions shall have a fire-resistance rating of not less than 1 hour.
Section 716.5.9 Door closing. Fire doors shall be latching and self or automatic closing.

IV.Horizontal Separatıon (Section 420.3)

Floor assemblies separating sleeping units in the same building and floor assemblies separating sleeping units from other occupancies contiguous to them in the same building shall be constructed as horizontal assemblies in accordance with Section 711.

Section 711.2.4.3 Dwelling units and sleeping units. Horizontal assemblies serving as dwelling or sleeping unit separations in accordance with Section 420.3 shall be not less than 1-hour fire resistance rated construction.

V. Type of Construction

Type II-B, 100% Non-sprinkled

VI.Allowable Stories (Table 504.4)

2 Story
Actual = 2Story

VII. Allowable Height (Table 504.3)

55 feet
Actual = 16'

VIII. Allowable Area Calculations (Group R-4) most restrictive

At = 7,000 S.F. (Table 503)
P = 232'
F = 116'
If = 0.41 - Frontage Increase Sec. 506.2
Aa = 9,500 + (9,500 x 0.41) 2
Aa = 9,500 + (3,895 x 2)
Aa = 9,500 + 7,790
Aa = 10,360
Aa = 17,290 S.F. - Maximum Allowable Area
Actual Area = 5,275 S.F.

IX.Fire Resistance Rating Requirements (Table 601)

Building Element	Rating (Hours)
a. Structural Frame	NA
b. Bearing Walls	1 Hour
c. Nonbearing	
1. Exterior < 10 to P.L.	1 HR (Table 602)
2. Interior	NR
d. Floor Construction	1 Hour
e. Roof Construction	NR

X. Occupant Loads (First Floor)

1. Museum Display - 5,240 S.F. / 30 = 175
2. Office - 264 S.F. / 100 = 3
3. Kitchen - 312 S.F. / 200 = 2

Sub-total = 180

XI. Occupant Loads (Second Floor)

1. Dwelling Unit - 477 S.F. / 200 = 2
2. Conference Room - 304 S.F. / 15 = 20
3. Office - 253 S.F. / 100 = 3
4. Mechanical Room - 688 S.F. / 300 = 2

Sub-total = 27

Grand Total = 207

XII. Exit Width Calculations

a. First Floor
180 x 0.20 = minimum 2 - 3' wide doors

c. Second Floor
27 x 0.30 = minimum 1- 36" wide stair required

XIII. Minimum Required Plumbing fixtures: Per table 2902.1

Group A-3 with 180 occupants

180 x 50% = (90 males and 90 females)

Water Closets: ratio 1 per 125 (males) and 1 per 65 (females)
Males: 90 x 1 / 125 = 1 water closet
Females: 90 x 1 / 65 = 1 water closets
3 water closets provided (1 WC's male + 1 Urinal and 2 WC female)

Lavatory
180 / 200 = 1 lavatories
2 lavatories provided (1 lavatory male and 1 lavatory female)

XIV. Automatic Sprinkler System (Section 903.2.8.3 Group R-4 condition 2)

No automatic sprinkler system required because the fire area is less than 12,000 S.F. and the occupant load is less than 300 as per Section 903.2.1.3.

CODE REVIEW

THE SCOPE OF WORK IS THE DESIGN AND CONSTRUCTION OF A BLACK COWBOY ART MUSEUM

SCOPE OF WORK

PROJECT LOCATION

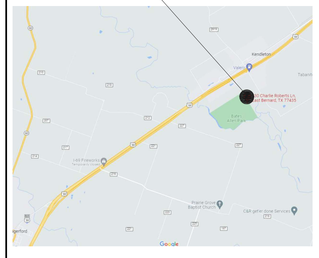

VICINITY MAP

VCS architects
19251 Purus Dr.
Porter, TX 77365

CONSULTANTS

BATES ALLEN PARK
BLACK COWBOY MUSEUM
630 CHARLIE ROBERTS LANE
KENDELTON TX. 77451

REGISTERED ARCHITECT ROSINA MARK STATE OF TEXAS
Rosina Mark
9/20/24

Drawing Date: 06/03/2024
Drawn By: SMA
Checked By: DDV
Scale: AS NOTED

Revisions:

DESCRIPTION	
ISSUE FOR BID & CONSTRUCTION	09/23/2024

Drawing Name

INDEX, CODE & PROJECT INFORMATION

A-001

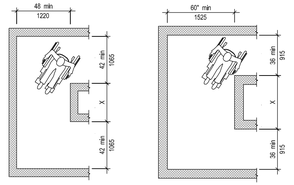

FIGURE 403.5.2
ACCESSIBLE ROUTE CLEAR WIDTH @ TURNS

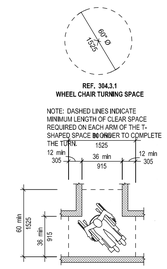

REF. 304.3.1
WHEEL CHAIR TURNING SPACE

NOTE: DASHED LINES INDICATE MINIMUM LENGTH OF CLEAR SPACE REQUIRED ON EACH ARM OF THE T-SHAPED SPACE IN ORDER TO COMPLETE THE TURN

FIGURE 304.3.2
WHEELCHAIR TURNING SPACE

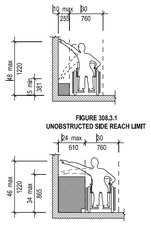

FIGURE 308.3.1
UNOBSTRUCTED SIDE REACH LIMIT

FIGURE 308.3.2
OBSTRUCTED SIDE REACH LIMIT

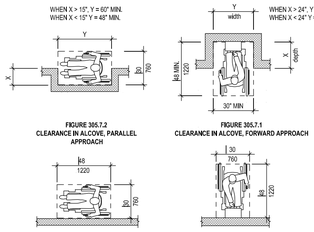

FIGURE 305.7.2
CLEARANCE IN ALCOVE, PARALLEL APPROACH

FIGURE 305.7.1
CLEARANCE IN ALCOVE, FORWARD APPROACH

FIGURE 305.5
CLEAR FLOOR SPACE, PARALLEL APPROACH

FIGURE 305.5
CLEAR FLOOR/GROUND SPACE, FORWARD APPROACH

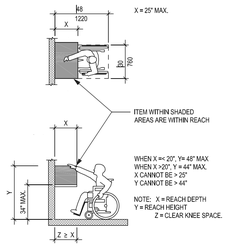

FIGURE 308.2.2
FORWARD REACH OVER AN OBSTRUCTION

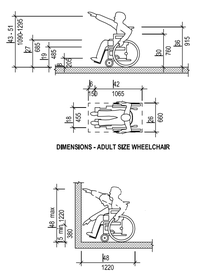

DIMENSIONS - ADULT SIZE WHEELCHAIR

FIGURE 308.2.1
UNOBSTRUCTED FORWARD REACH LIMITS

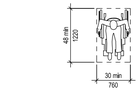

FIGURE 305.3
CLEAR FLOOR SPACE FOR WHEELCHAIRS

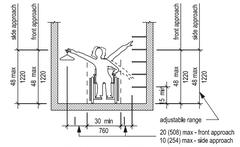

STORAGE SHELVES AND CLOSETS
REF. 305 - CLEAR FLOOR/GROUND SPACE
REF. 308 - REACH RANGES

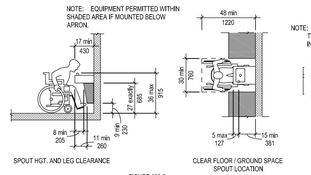

SPOUT HGT. AND LEG CLEARANCE

CLEAR FLOOR / GROUND SPACE SPOUT LOCATION

FIGURE 602.5
CANTILEVERED DRINKING FOUNTAINS AND WATER COOLERS (LOW)
REF. 305 - 309

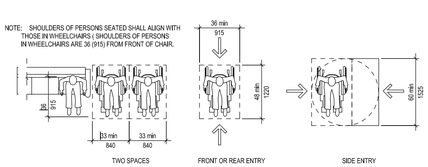

TWO SPACES

FRONT OR REAR ENTRY

SIDE ENTRY

FIGURES 802.1.3 / 802.1.2 / 803.3.1
WIDTH, DEPTH, ALIGNMENT OF WHEELCHAIR SPACES AND COMPANION SEATING IN ASSEMBLY AREAS

NOTE: HIGH FOUNTAINS FOR STANDING PERSONS SHALL BE 38 (965) MIN. AND 43 (1090) MAX. AFF. HIGH FOUNTAINS SHALL PROVIDE CANE DETECTION (OR BE LOCATED IN ALCOVE SO AS NOT TO PROTRUDE INTO WALKWAY)

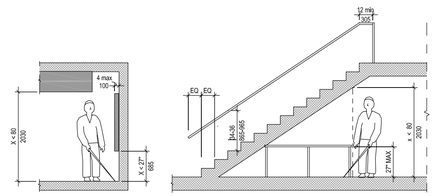

FIG. 307.2
LIMITS OF PROTRUDING OBJECTS

FIG. 307.4
VERTICAL CLEARANCE

NOTE: 505.10.1 - RAMP HANDRAILS EXTEND 12 min (305) BEYOND RAMP RUN BOTH TOP & BOTTOM.
505.10.2 - TOP EXT. - HOR. 12 MIN. DIRECTLY ABOVE 1ST RISER NOSING.
505.10.3 BOTTOM EXT. - EXTENDS AT SLOPE OF THE STAIR FLIGHT FOR A HOR. DISTANCE AT LEAST EQUAL TO ONE TREAD DEPTH BEYOND THE LAST RISER NOSING.

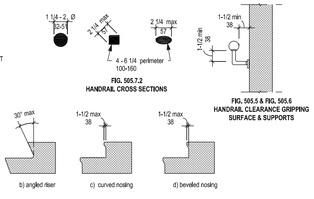

FIG. 505.7.2
HANDRAIL CROSS SECTIONS

FIG. 505.5 & FIG. 505.6
HANDRAIL CLEARANCE GRIPPING SURFACE & SUPPORTS

FIG. 504.5 STAIR NOSINGS

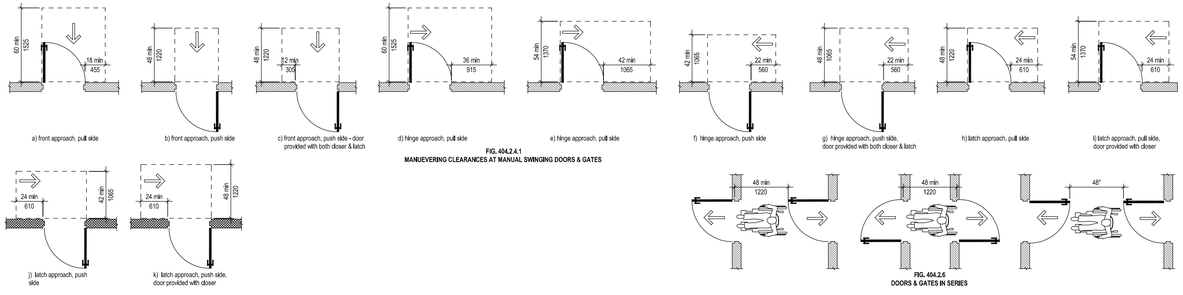

FIG. 404.2.4.1
MANUEVERING CLEARANCES AT MANUAL SWINGING DOORS & GATES

FIG. 404.2.6
DOORS & GATES IN SERIES

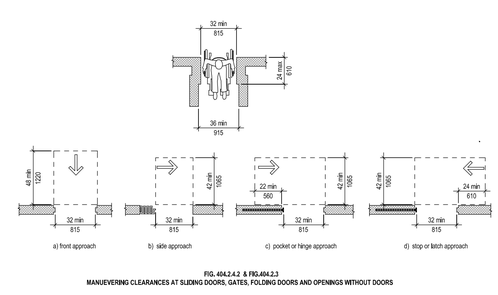

FIG. 404.2.4.2 & FIG.404.2.3
MANUEVERING CLEARANCES AT SLIDING DOORS, GATES, FOLDING DOORS AND OPENINGS WITHOUT DOORS

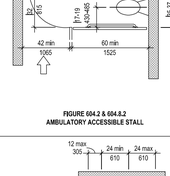

FIGURE 604.2 & 604.8.2
AMBULATORY ACCESSIBLE STALL

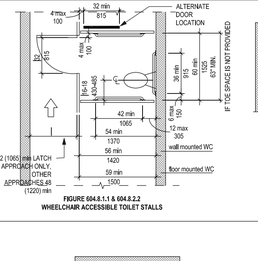

FIGURE 604.8.1.1 & 604.8.2.2
WHEELCHAIR ACCESSIBLE TOILET STALLS

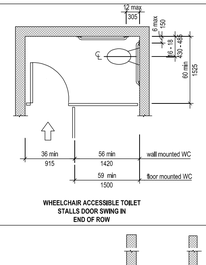

WHEELCHAIR ACCESSIBLE TOILET STALLS DOOR SWING IN END OF ROW

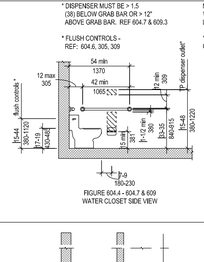

FIGURE 604.4 - 604.7 & 609
WATER CLOSET SIDE VIEW

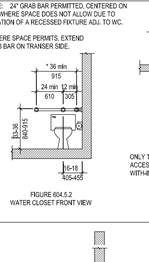

FIGURE 604.5.2
WATER CLOSET FRONT VIEW

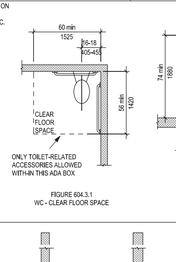

FIGURE 604.3.1
WC - CLEAR FLOOR SPACE

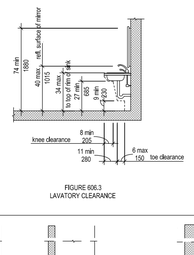

FIGURE 606.3
LAVATORY CLEARANCE

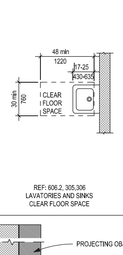

REF: 606.2, 305.306
LAVATORIES AND SINKS
CLEAR FLOOR SPACE

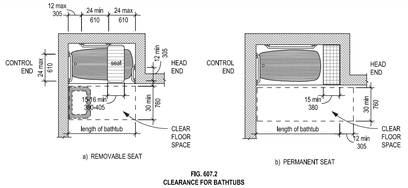

a) REMOVABLE SEAT

b) PERMANENT SEAT

FIG. 607.2
CLEARANCE FOR BATHTUBS

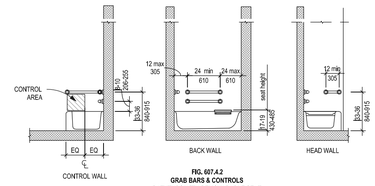

FIG. 607.4.2
GRAB BARS & CONTROLS
BATHTUBS WITH REMOVABABLE SEAT

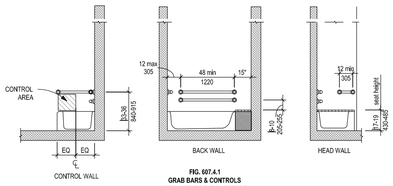

FIG. 607.4.1
GRAB BARS & CONTROLS
PERMANENT SEAT BATHTUBS

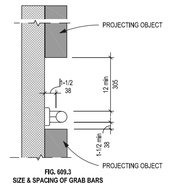

FIG. 609.3
SIZE & SPACING OF GRAB BARS

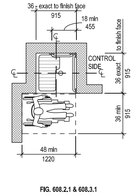

FIG. 608.2.1 & 608.3.1
TRANSFER TYPE SHOWER COMPARTMENT

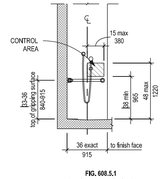

FIG. 608.5.1
TRANSFER TYPE SHOWER COMPARTMENT CONTROLS

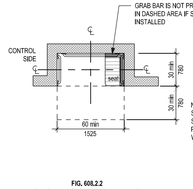

FIG. 608.2.2
ROLL-IN TYPE SHOWER COMPARTMENT

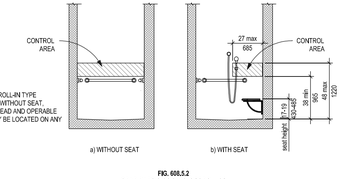

FIG. 608.5.2
GRAB BARS & CONTROLS IN ROLL-IN TYPE SHOWER COMPARTMENTS

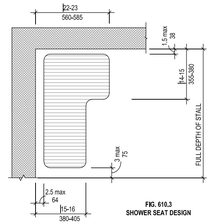

FIG. 610.3
SHOWER SEAT DESIGN

FLOOR PLAN ACCESSIBILITY NOTES

ALL CONSTRUCTION SHALL COMPLY WITH 2012 TEXAS ACCESSIBILITY STANDARDS (TAS). CONTRACTOR SHALL OBTAIN A COPY OF THE CURRENT TAS FOR REFERENCE AND KEEP IT ON SITE DURING THE PROJECT. CONTRACTOR SHALL NOTIFY ARCHITECT WHEN THEY ENCOUNTER CONDITIONS WHICH DO NOT COMPLY WITH THESE STANDARDS.

1. SELECTED TAS REQUIREMENTS FOR WHICH THE CONTRACTOR SHALL BECOME PARTICULARLY FAMILIAR ARE THE FOLLOWING.

A. AT LEAST ONE ACCESSIBLE ENTRANCE AND ROUTE SHALL COMPLY WITH 206, 401, 402, AND 403.
B. OBJECTS THAT OVERHANG OR PROTRUDE INTO CIRCULATION PATH SHALL COMPLY WITH 204 AND 307.
C. ALL FLOOR SURFACES SHALL COMPLY WITH 302.
D. IN BUILDINGS AND FACILITIES, FLOORS OF A GIVEN STORY SHALL BE A COMMON LEVEL THROUGHOUT, OR SHALL BE CONNECTED BY PEDESTRIAN RAMPS, PASSENGER ELEVATORS, OR SPECIAL ACCESS LIFTS IN COMPLIANCE WITH 405, 407, 408, AND 410.
E. PUBLIC TELEPHONES SHALL COMPLY WITH 217 AND 704.
F. TOILET FACILITIES SHALL BE LOCATED ON AN ACCESSIBLE ROUTE OF A BUILDING AND SHALL BE ACCESSIBLE AND COMPLY WITH 213 AND APPLICABLE SECTIONS OF CHAPTER 6.
G. DRINKING FOUNTAINS SHALL COMPLY WITH 211 AND 602.
H. PERMANENT SIGNAGE SHALL COMPLY WITH 216 AND 703.

2. ALL DOORS SHALL HAVE LEVER TYPE HARDWARE TO MEET ADA/TAS REQUIREMENTS.

3. FOR DOORS WITH CLOSERS, THE MAXIMUM OPERATING FORCE FOR PUSHING OR PULLING THE DOOR AND THE SWEEP PERIOD SHALL COMPLY WITH THE MOST STRINGENT REQUIREMENTS OF THE APPROPRIATE ACCESSIBILITY CODE.

VCS architects
19251 Purus Dr.
Porter, TX 77365

CONSULTANTS

BATES ALLEN PARK
BLACK COWBOY MUSEUM
630 CHARLIE ROBERTS LANE
KENDLETON TX. 77451

REGISTERED ARCHITECT
STATE OF TEXAS
COPY
9/20/24

Drawing Date: 06/03/2024
Drawn By: SMA
Checked By: DDV
Scale: AS NOTED

Revisions:

DESCRIPTION	
ISSUE FOR BID & CONSTRUCTION	09/23/2024

Drawing Name

GUIDELINES FOR COMPLIANCE WITH TAS

A-002

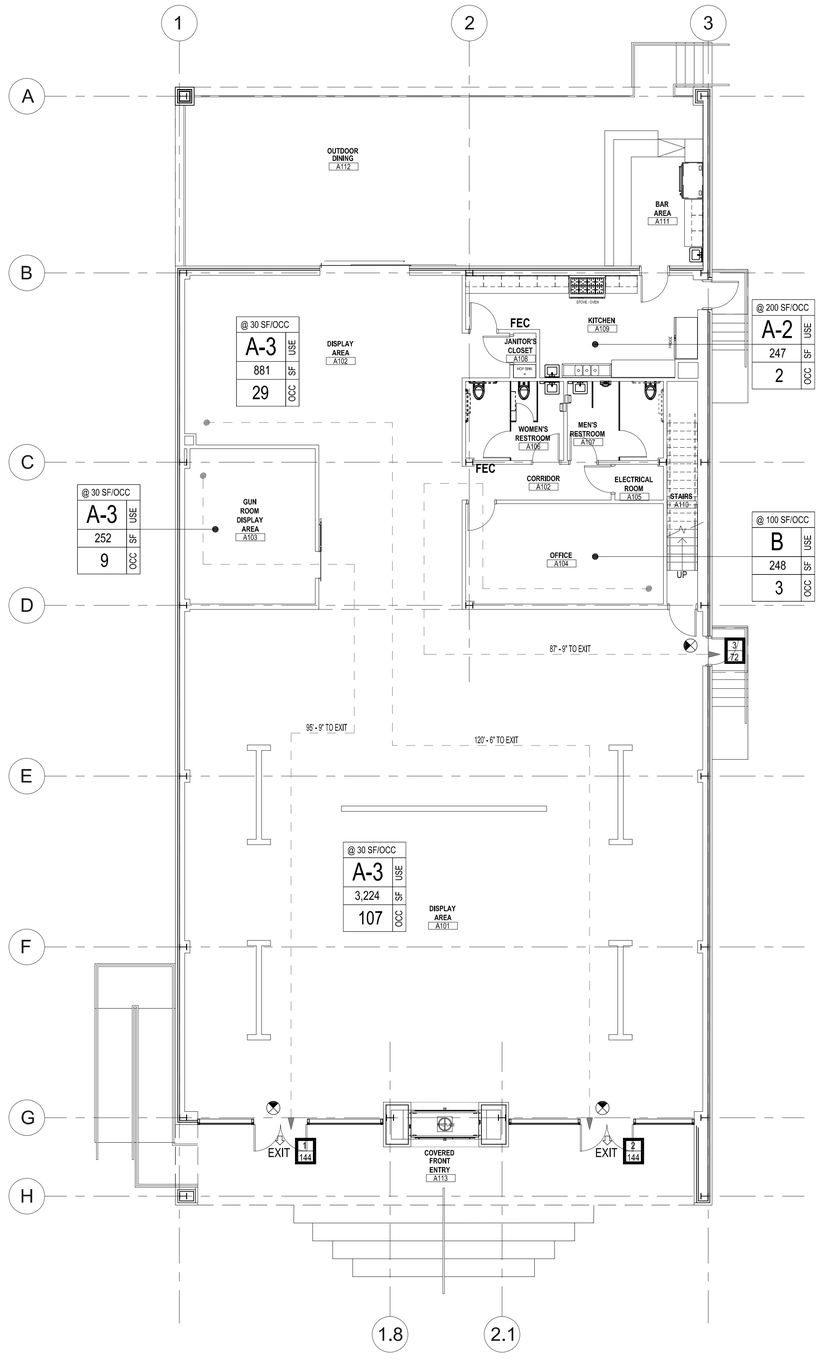

ARCHITECTURAL FIRST FLOOR LIFE SAFETY PLAN SCALE: 1/8"=1'-0" | 12

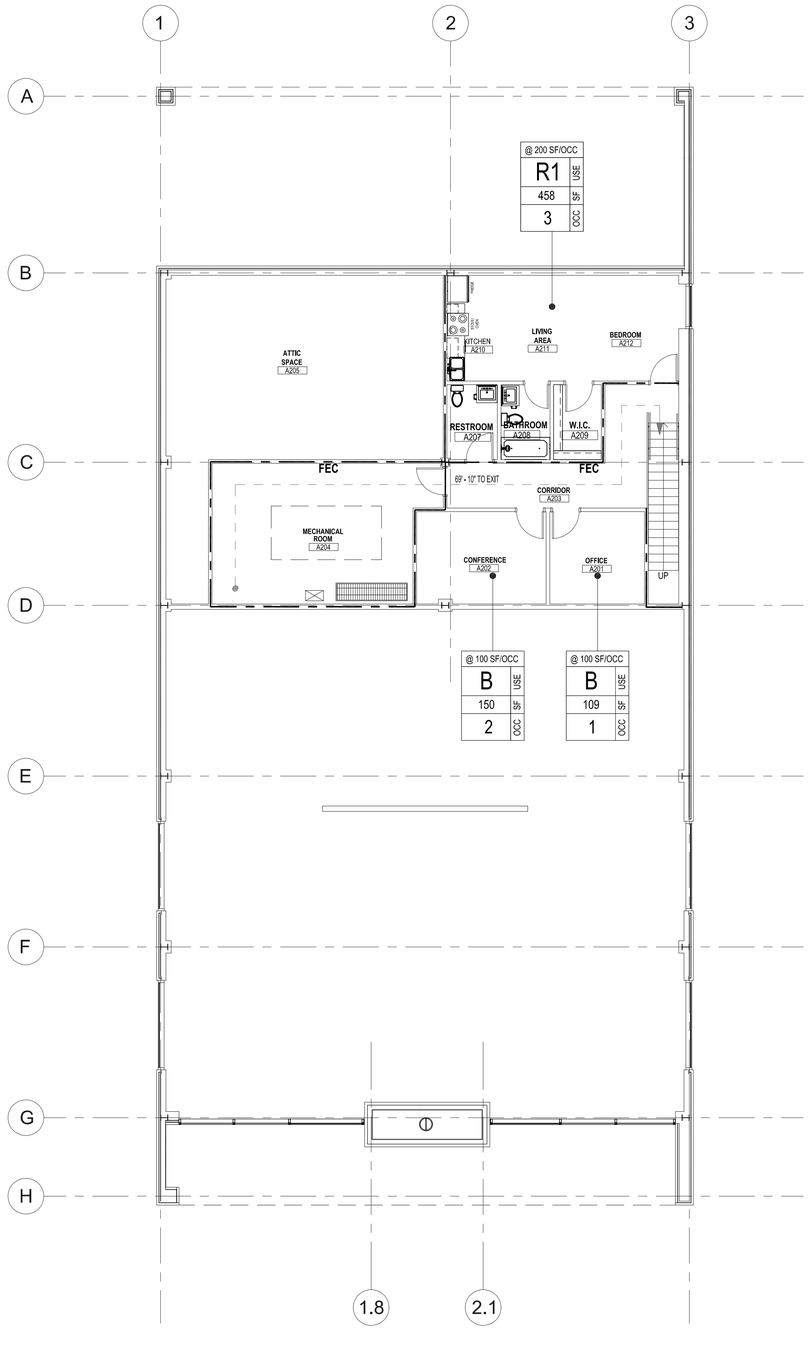

ARCHITECTURAL SECOND FLOOR LIFE SAFETY PLAN SCALE: 1/8"=1'-0" | 4

LIFE SAFETY PLAN LEGEND

SYMBOL	DESCRIPTION
	0-HOUR SMOKE BARRIER
	1-HOUR FIRE PARTITION
	1-HOUR FIRE/SMOKE PARTITION
	2-HOUR FIRE PARTITION
	2-HOUR FIRE/SMOKE PARTITION
OCCUPANCY TAG: @ 100/OCC / B / 5,000 / 60	OCC PER GSF/NSF; USE GROUP; GSF/NSF; OCC LOAD
SMOKE COMPARTMENT TAG: SC-L1A / 150 SF	SMOKE COMPARTMENT NAME; SMOKE COMPARTMENT AREA
100'	PATH OF TRAVEL & DISTANCE
DOOR/STAIR 10 / 210	EXIT NUMBER; BUILDING EXIT / SPACE EXIT CAPACITY
	EXIT LIGHT
	EXIT LIGHT WITH DIRECTIONAL ARROW
F	FIRE ALARM PULL STATION
F	FIRE ALARM ANNUNCIATOR
FAC	FIRE APPARATUS CABINET, FIRE HOSE AND EXTINGUISHER
FHC	FIRE HOSE CABINET
FEC	FIRE EXTINGUISHER CABINET; RE: 8/A-601 FOR DETAIL
FE	FIRE EXTINGUISHER
SP	FIRE STANDPIPE
S	SMOKE DETECTOR
	SMOKE COMPARTMENT SEPARATION
	SHELL SPACE
	1 HR FIRE RATED CEILING

LIFE SAFETY LEGEND

GENERAL LIFE SAFETY /CODE INFORMATION

QUICK RESPONSE FIRE SPRINKLERS	THROUGHOUT
MAXIMUM TRAVEL DISTANCE TO EXIT	300'
MAXIMUM DEAD END CORRIDOR	50'

SMOKE COMPARTMENTS

SMOKE COMPARTMENT	SQUARE FOOTAGES

PLAN NORTH

TRUE NORTH

VCS architects

19251 Purus Dr.
Porter, TX 77365

CONSULTANTS

BATES ALLEN PARK
BLACK COWBOY MUSEUM
630 CHARLIE ROBERTS LANE
KENDLETON TX. 77451

REGISTERED ARCHITECT ROSINA MARK STATE OF TEXAS
9/20/24

Drawing Date: 06/03/2024
Drawn By: SMA
Checked By: DDV
Scale: AS NOTED

Revisions:

DESCRIPTION	
ISSUE FOR BID & CONSTRUCTION	09/23/2024

Drawing Name

OVERALL LIFE SAFETY PLAN

A-003

GENERAL

1. THE CONTRACTOR SHALL FIELD VERIFY EXISTING CONDITIONS BEFORE BEGINNING CONSTRUCTION
2. THE CONTRACTOR IS RESPONSIBLE FOR PROVIDING SECURITY TO PROTECT THE PROJECT SITE, CONTRACTOR PROPERTY, EQUIPMENT, AND WORK.
3. THE CONTRACTOR IS RESPONSIBLE FOR CLEANING STREETS OF CONSTRUCTION DIRT AND DEBRIS AT CLOSE OF EACH WORK DAY.
4. THE CONDITION OF THE ROAD AND/OR RIGHT-OF-WAY, UPON COMPLETION OF THE JOB SHALL BE AS GOOD AS OR BETTER THAN PRIOR TO STARTING WORK.
5. PRIOR TO CONSTRUCTION, THE CONTRACTOR, ALONG WITH CONCURRENCE FROM THE FIELD ENGINEER, SHALL DETERMINE HIS/HER LAY-DOWN AND/OR STAGING AREA LOCATIONS.
6. THE CONTRACTOR SHALL NOTIFY ALL PROPERTY OWNERS A MINIMUM OF 24 HOURS PRIOR TO BLOCKING DRIVEWAYS OR ENTERING UTILITY EASEMENTS.
7. TRAFFIC INGRESS AND EGRESS FOR DRIVEWAYS AND PEDESTRIAN ACCESS FACILITIES SHALL BE MAINTAINED THROUGHOUT CONSTRUCTION WITH ALL WEATHER SURFACES.
8. THE CONTRACTOR SHALL REMOVE ANY FENCES, POSTS, MAILBOXES, PLANTERS, PERMANENT TRASH CONTAINERS, CULVERTS, ETC. OR SECTIONS THEREOF, THAT ENCROACH WITHIN THE COUNTY'S RIGHT-OF-WAY. NOTE: PRIOR TO CONSTRUCTION, THE PROPERTY OWNER WAS PAID TO RELOCATE OR REPLACE THESE ITEMS OUTSIDE OF THE COUNTY'S RIGHT-OF-WAY. IF THE OWNER HAS FAILED TO DO SO, THE CONTRACTOR WILL REPLACE THEM WITH THE MINIMUM LEVEL OF QUALITY NEEDED TO SECURE THE PROPERTY AND/OR MAINTAIN MAIL DELIVERY. IN THAT CASE, PAYMENT FOR THESE INSTALLATIONS WILL BE INCLUDED AS EXTRA WORK ITEMS OR AS OVERRUNS TO EXISTING PAY ITEMS.

   ANY DAMAGE CAUSED BY THE CONTRACTOR TO SUCH ITEMS LOCATED OUTSIDE OF THE COUNTY'S RIGHT-OF-WAY, SHALL BE REPLACED WITH LIKE-KIND OR BETTER AT THE CONTRACTOR'S EXPENSE.

   ALSO, IF THESE ITEMS ARE LOCATED WITHIN THE PROJECT RIGHT-OF-WAY AND ARE DESIGNATED TO REMAIN, ANY DAMAGE CAUSED BY THE CONTRACTOR TO SUCH ITEMS, SHALL BE REPLACED WITH LIKE-KIND OR BETTER AT THE CONTRACTOR'S EXPENSE.

   TREES, BUSHES, SHRUBBERY AND OTHER DAMAGED PLANTINGS DESIGNATED TO REMAIN SHALL BE REPLACED WITHIN 72 HOURS OF REMOVAL AND ARE TO BE THOROUGHLY WATERED-IN. NO SEPARATE PAY.
9. PAVED SURFACES, PAVEMENT MARKERS AND MARKINGS SHALL BE PROTECTED FROM DAMAGE BY TRACKED EQUIPMENT.
10. IRON RODS DISTURBED DURING CONSTRUCTION ARE TO BE REPLACED BY A REGISTERED PROFESSIONAL LAND SURVEYOR FOR THE ORIGINAL PROPERTY OWNER AT NO SEPARATE PAY.
11. CONSTRUCTION STAKING WILL BE PROVIDED BY THE CONTRACTOR. TWO COPIES OF STAKING NOTES TO BE PROVIDED TO THE ENGINEER PRIOR TO CONSTRUCTION.
12. THE COUNTY OR THE COUNTY'S SURVEYOR SHALL PROVIDE A BENCHMARK OR TEMPORARY BENCHMARK AND SURVEY CONTROLS.
13. THE CONTRACTOR SHALL MAINTAIN UPDATED RED-LINED RECORD DRAWINGS ON SITE FOR INSPECTION BY THE ENGINEER.
14. MOWING, MAINTENANCE, AND CLEAN-UP OF THE PROJECT SHALL MEET THE REQUIREMENT OF SPECIFICATION ITEM 560 (NO SEPARATE PAY). MOWING, MAINTENANCE, AND CLEAN-UP IS REQUIRED FOR THE PROJECT LIMITS AND DURATION, REGARDLESS OF THE CONTRACTOR'S SCOPE OF ACTIVITIES WITHIN THE PROJECT LIMITS.
15. THE REMOVAL OF ANY ABANDONED UTILITIES REQUIRED TO COMPLETE THE WORK SHALL BE INCIDENTAL AND NO SEPARATE PAYMENT SHALL BE MADE.
16. IT IS THE CONTRACTOR'S RESPONSIBILITY TO STOCKPILE NECESSARY MATERIAL ON-SITE OR AT A SECURED OFF-SITE LOCATION AT NO ADDITIONAL EXPENSE TO FORT BEND COUNTY. ANY SUITABLE EXCAVATED MATERIAL ON THE PROJECT WHICH IS AVAILABLE AT THE TIME OF NEED; WHETHER FROM STORM SEWER, ROADWAY, AND/OR CHANNEL EXCAVATION, SHALL BE USED BEFORE BORROW IS BROUGHT ON-SITE.
17. MANHOLES, JUNCTION BOXES, INLETS, AND RISERS ARE TO BE PRE-CAST OR CAST IN PLACE.
18. THE FOLLOWING DETAILS ARE MINIMUM REQUIREMENTS AND MAY BE SUPERSEDED BY GEOTECHNICAL ENGINEER RECOMMENDATIONS OR MORE STRINGENT REQUIREMENTS FROM THE CITY'S ETJ PROJECT IS WITHIN.
19. POP UP DRAINS ARE NOT ALLOWED IN FORT BEND COUNTY RIGHT OF WAY.

20. CONTRACTOR AND ALL SUBCONTRACTORS SHALL VERIFY THE SUITABILITY OF ALL EXISTING AND PROPOSED SITE CONDITIONS INCLUDING GRADES AND DIMENSIONS BEFORE STARTING CONSTRUCTION. THE ENGINEER SHALL BE NOTIFIED IMMEDIATELY OF ANY DISCREPANCIES.

21 BEFORE STARTING CONSTRUCTION, CONTRACTOR SHALL VERIFY BENCHMARK ELEVATION AND NOTIFY ENGINEER IF ANY DISCREPANCY AND/OR CONFLICT IS FOUND.

22. CONTRACTOR SHALL ENSURE THERE IS POSITIVE DRAINAGE FROM THE PROPOSED BUILDINGS AND NO PONDING IN PAVED AREAS, AND SHALL NOTIFY ENGINEER IF ANY GRADING DISCREPANCIES ARE FOUND IN THE EXISTING AND PROPOSED GRADES PRIOR TO PLACEMENT OF PAVEMENT OR UTILITIES.

23. CONTRACTOR SHALL PROTECT ALL MANHOLE COVERS, VALVE COVERS, VAULT LIDS, FIRE HYDRANTS, POWER POLES, GUY WIRES, AND TELEPHONE BOXES THAT ARE TO REMAIN IN PLACE AND UNDISTURBED DURING CONSTRUCTION.

24. ALL EXISTING CONCRETE PAVING, SIDEWALK, AND CURB DEMOLITION SHALL BE REMOVED AND DISPOSED OF BY CONTRACTOR. DISPOSAL SHALL BE AT AN APPROVED OFF-SITE, LAWFUL LOCATION, UNLESS DIRECTED OTHERWISE BY THE OWNER.

WATER CONSTRUCTION NOTES

1. WATER LINES SHALL BE CONSTRUCTED IN ACCORDANCE WITH THE LATEST CITY OF HOUSTON INFRASTRUCTURE DESIGN MANUAL, STANDARD SPECIFICATION, AND CONSTRUCTION DETAILS.
2. ALL 4" THROUGH 12" WATER LINE TO BE AWWA C-900 PVC DR-18 BLUE PRESSURE RATED WATER MAIN WITH 2" AND SMALLER WATER SERVICE LINE TO BE CONTINUOUS TYPE K COPPER TUBING PER COH STANDARD SPECIFICATION SECTION 02503. ALL 4"THRU 54" DI PIPE WATER LINES SHALL BE AWWA C151 WITH INSIDE LINING WITH AWWA C104 AND DOUBLE WRAPPED WITH 8-MIL POLYETHYLENE SHEETS.
3. CONCRETE THRUST BLOCKS SHALL BE PROVIDED AS NECESSARY TO PREVENT PIPE MOVEMENT. USE RESTRAINED JOINTS WHERE PREVENTING MOVEMENT OF 16" GREATER PIPE IS NECESSARY DUE TO THRUST.
4. ALL WATER LINES UNDER PROPOSED OR FUTURE PAVING AND TO A POINT OF ONE (1) FOOT BACK OF ALL PROPOSED OR FUTURE CURBS SHALL BE ENCASED IN BANK SAND TO 12" OVER PIPE AND BACKFILLED WITH CEMENT STABILIZED SAND TO WITHIN ONE (1) FOOT OF SUBGRADE.
5. ALL WATER LINE AND SEWER LINE CROSSINGS SHALL BE CONSTRUCTED PER CITY OF HOUSTON AND TCEQ REGULATIONS.
6. ALL WATER VALVES SHALL BE SUPPLIED AND INSTALLED IN ACCORDANCE WITH THE LATEST EDITION OF AWWA C-500 AND SHALL BE OF THE RESILIENT SEAT TYPE.
7. ALL WATER LINES TO BE DISINFECTED IN CONFORMANCE WITH AWWA C-651 AND THE TEXAS STATE DEPARTMENT OF HEALTH. AT LEAST ONE BACTERIOLOGICAL SAMPLE SHALL BE COLLECTED FOR EVERY 1,000 LINEAR FEET OF WATER LINE AND SHALL BE REPEATED IF CONTAMINATION PERSISTS.
8. ALL BELOW GRADE VALVES SHALL BE GASKETED, HUB-END GATE VALVES WITH A CAST IRON BOX, EXCEPT WHERE FLANGES ARE CALLED OUT ON THE PLANS. THRU 12" FITTINGS SHALL BE CEMENT MORTAR LINED COMPACT DUCTILE IRON PRESSURE FITTINGS PER ANSI A21.53, OR PUSH ON FITTINGS PER ANSI A21.10 PRESSURE RATED AT 250 PSIG.
10. HYDROSTATIC TESTING: ALL WATER PIPE SHALL BE TESTED FOR LEAKAGE IN ACCORDANCE WITH THE LATEST COUNTY STANDARD CONSTRUCTION SPECIFICATIONS. TESTS ARE TO BE PERFORMED ON THE ENTIRE FOOTAGE OF WATER PIPE LINE INCLUDED IN THE PROJECT.
11. ALL WATER LINES TO HAVE 7' MINIMUM COVER TO FINISHED GRADE AND MINIMUM 12" CLEARANCE TO OTHER UTILITIES AT CROSSING UNLESS OTHERWISE NOTED ON PLANS. ALL WATER LINE INSTALLED OVER DEEP SHALL UTILIZE RESTRAINED JOINT FITTINGS.
12. CONTRACTOR SHALL KEEP WATER PIPE CLEAN AND CAPPED (OR OTHERWISE EFFECTIVELY COVERED) OPEN PIPE ENDS TO EXCLUDE INSECTS, ANIMALS OR OTHER SOURCES OF CONTAMINATION FROM UNFINISHED PIPE LINES AT TIMES WHEN CONSTRUCTION IS NOT IN PROGRESS.

GRADING NOTES

1. GENERAL CONTRACTOR AND ALL SUBCONTRACTORS SHALL VERIFY THE SUITABILITY OF ALL EXISTING AND PROPOSED SITE CONDITIONS INCLUDING GRADES AND DIMENSIONS BEFORE STARTING CONSTRUCTION. THE ENGINEER SHALL BE NOTIFIED IMMEDIATELY OF ANY DISCREPANCIES.
2. BEFORE STARTING CONSTRUCTION, CONTRACTOR SHALL VERIFY BENCHMARK ELEVATION AND NOTIFY ENGINEER IF ANY DISCREPANCY AND/OR CONFLICT IS FOUND.
3. CONTRACTOR SHALL ENSURE THERE IS POSITIVE DRAINAGE FROM THE PROPOSED BUILDINGS AND NO PONDING IN PAVED AREAS, AND SHALL NOTIFY ENGINEER IF ANY GRADING DISCREPANCIES ARE FOUND IN THE EXISTING AND PROPOSED GRADES PRIOR TO PLACEMENT OF PAVEMENT OR UTILITIES.
4. CONTRACTOR SHALL PROTECT ALL MANHOLE COVERS, VALVE COVERS, VAULT LIDS, FIRE HYDRANTS, POWER POLES, GUY WIRES, AND TELEPHONE BOXES THAT ARE TO REMAIN IN PLACE AND UNDISTURBED DURING CONSTRUCTION.
5. ALL EXISTING CONCRETE PAVING, SIDEWALK, AND CURB DEMOLITION SHALL BE REMOVED AND DISPOSED OF BY CONTRACTOR. DISPOSAL SHALL BE AT AN APPROVED OFF-SITE, LAWFUL LOCATION, UNLESS DIRECTED OTHERWISE BY THE OWNER.

CONSTRUCTION

1. FORT BEND COUNTY MUST BE INVITED TO THE PRE-CONSTRUCTION MEETING.
2. CONTRACTOR SHALL NOTIFY FORT BEND COUNTY ENGINEERING DEPARTMENT 48 HOURS PRIOR TO COMMENCING CONSTRUCTION AND 48 HOUR NOTICE TO ANY CONSTRUCTION ACTIVITY WITHIN THE LIMITS OF THE PAVING AT CONSTRUCTION@FBCTX.GOV.
3. CONTRACTOR IS RESPONSIBLE FOR OBTAINING ALL PERMITS REQUIRED FROM FORT BEND COUNTY PRIOR TO COMMENCING CONSTRUCTION OF ANY IMPROVEMENTS WITHIN COUNTY ROAD RIGHT OF WAYS.
4. ALL PAVING IMPROVEMENTS SHALL BE CONSTRUCTED IN ACCORDANCE WITH FORT BEND COUNTY "RULES, REGULATIONS AND REQUIREMENTS" RELATING TO THE APPROVAL AND ACCEPTANCE OF IMPROVEMENTS IN SUBDIVISIONS AS CURRENTLY AMENDED.
5. ALL ROAD WIDTHS, CURB RADII AND CURB ALIGNMENT SHOWN INDICATES BACK OF CURB.
6. A CONTINUOUS LONGITUDINAL REINFORCING BAR SHALL BE USED IN THE CURBS.
7. ALL CONCRETE PAVEMENT SHALL BE 5½ SACK CEMENT WITH A MINIMUM COMPRESSIVE STRENGTH OF 3500 PSI AT 28 DAYS. TRANSVERSE EXPANSION JOINTS SHALL BE INSTALLED AT EACH CURB RETURN AND AT A MAXIMUM SPACING OF 60 FEET.
8. ALL WEATHER ACCESS TO ALL EXISTING STREETS AND DRIVEWAYS SHALL BE MAINTAINED AT ALL TIMES.
9. 4" X 12" REINFORCED CONCRETE CURB SHALL BE PLACED IN FRONT OF SINGLE FAMILY LOTS ONLY. ALL OTHER AREAS SHALL BE 6" REINFORCED CONCRETE CURB.
10. CURB HEADERS ARE REQUIRED AT CURB CONNECTIONS TO HANDICAP RAMPS, WITH NO CONSTRUCTION JOINT WITHIN 5' OF RAMPS.
11. GUIDELINES ARE SET FORTH IN THE TEXAS "MANUAL ON UNIFORM TRAFFIC CONTROL DEVICES", AS CURRENTLY AMENDED, SHALL BE OBSERVED. THE CONTRACTOR SHALL BE RESPONSIBLE FOR PROVIDING ADEQUATE FLAGMEN, SIGNING, STRIPING AND WARNING DEVICES, ETC., DURING CONSTRUCTION – BOTH DAY AND NIGHT.
12. ALL R1-1 STOP SIGNS SHALL BE A MINIMUM OF 36"X36" WITH DIAMOND GRADE SHEETING PER TEXAS MANUAL ON UNIFORM TRAFFIC CONTROL DEVICES.
13. STREET NAME SIGNAGE SHALL BE ON A 9" HIGH SIGN FLAT BLADE W/REFLECTIVE GREEN BACKGROUND. STREET NAMES SHALL BE UPPER AND LOWERCASE LETTERING WITH UPPERCASE LETTERS OF 6" MINIMUM AND LOWERCASE LETTERS OF 4.5" MINIMUM. THE LETTERS SHALL BE REFLECTIVE WHITE. STREET NAME SIGNS SHALL BE MOUNTED ON STOP SIGN POST.
14. A BLUE DOUBLE REFLECTORIZED BUTTON SHALL BE PLACED AT ALL FIRE HYDRANT LOCATIONS. THE BUTTON SHALL BE PLACED 12 INCHES OFF OF THE CENTERLINE OF THE STREET ON THE SAME SIDE AS THE HYDRANT.
15. THE PROJECT AND ALL PARTS THEREOF SHALL BE SUBJECT TO INSPECTION FROM TIME TO TIME BY INSPECTORS DESIGNATED BY FORT BEND COUNTY. NO SUCH INSPECTIONS SHALL RELIEVE THE CONTRACTOR OF ANY OF ITS OBLIGATIONS HEREUNDER. NEITHER FAILURE TO INSPECT NOR FAILURE TO DISCOVER OR REJECT ANY OF THE WORK AS NOT IN ACCORDANCE WITH THE DRAWINGS AND SPECIFICATIONS, REQUIREMENTS AND SPECIFICATIONS OF FORT BEND COUNTY OR ANY PROVISION OF THIS PROJECT SHALL BE CONSTRUED TO IMPLY AN ACCEPTANCE OF SUCH WORK OR TO RELIEVE THE CONTRACTOR OF ANY OF ITS OBLIGATIONS HEREUNDER.
16. STABILIZED SUBGRADE: DETERMINE THE THICKNESS OF THE STABILIZED SUBGRADE AFTER CURING AND COMPACTION. IF THE SUBGRADE DEPTH IS GREATER THAN THE PROPOSED THICKNESS BY 20% OR MORE, THE CMT LAB MUST PROVIDE VERIFICATION THE PERCENTAGE OF MATERIAL BEING USED TO STABILIZE THE SUBGRADE MEETS OR EXCEEDS PROJECT REQUIREMENTS. TEST RESULTS REQUIRED.

NOTE: FORT BEND COUNTY NOTES SUPERSEDE ANY CONFLICTING NOTES.

GRADING NOTES

1. GENERAL CONTRACTOR AND ALL SUBCONTRACTORS SHALL VERIFY THE SUITABILITY OF ALL EXISTING AND PROPOSED SITE CONDITIONS INCLUDING GRADES AND DIMENSIONS BEFORE STARTING CONSTRUCTION. THE ENGINEER SHALL BE NOTIFIED IMMEDIATELY OF ANY DISCREPANCIES.
2. BEFORE STARTING CONSTRUCTION, CONTRACTOR SHALL VERIFY BENCHMARK ELEVATION AND NOTIFY ENGINEER IF ANY DISCREPANCY AND/OR CONFLICT IS FOUND.
3. CONTRACTOR SHALL ENSURE THERE IS POSITIVE DRAINAGE FROM THE PROPOSED BUILDINGS AND NO PONDING IN PAVED AREAS, AND SHALL NOTIFY ENGINEER IF ANY GRADING DISCREPANCIES ARE FOUND IN THE EXISTING AND PROPOSED GRADES PRIOR TO PLACEMENT OF PAVEMENT OR UTILITIES.
4. CONTRACTOR SHALL PROTECT ALL MANHOLE COVERS, VALVE COVERS, VAULT LIDS, FIRE HYDRANTS, POWER POLES, GUY WIRES, AND TELEPHONE BOXES THAT ARE TO REMAIN IN PLACE AND UNDISTURBED DURING CONSTRUCTION.
5. ALL EXISTING CONCRETE PAVING, SIDEWALK, AND CURB DEMOLITION SHALL BE REMOVED AND DISPOSED OF BY CONTRACTOR. DISPOSAL SHALL BE AT AN APPROVED OFF-SITE, LAWFUL LOCATION, UNLESS DIRECTED OTHERWISE BY THE OWNER.

19251 Purus Dr.
Porter, TX 77365

WECS

TEXAS BOARD OF PROFESSIONAL ENGINEERS F-19379
4611 BIGGAM DRIVE
FRESNO, TEXAS 77545
(832) 443-4150

BATES ALLEN PARK
BLACK COWBOY MUSEUM
630 CHARLIE ROBERTS LANE

Drawing Date: 06/03/2024
Drawn By: SMA
Checked By: DDV
Scale:

Revisions:

DESCRIPTION	
ISSUE FOR BID & CONSTRUCTION	09/23/2024

CONSTRUCTION NOTES

C0.1

SANITARY SEWER NOTES

1. ALL SEWERS SHALL BE CONSTRUCTED IN ACCORDANCE WITH FORT BEND COUNTY STANDARD CONSTRUCTION SPECIFICATIONS FOR WASTEWATER COLLECTION SYSTEMS, WATER LINES, STORM DRAINAGE, STREET PAVING, AND TRAFFIC? AND ALL CURRENT AMENDMENTS THERETO AND BE SUBJECT TO A STANDARD EXFILTRATION TEST. TESTS ARE TO BE PERFORMED ON THE TOTAL FOOTAGE OF SEWER LINE INCLUDED IN THE PROJECT. REQUIREMENTS OF TEXAS ADMINISTRATIVE CODE, TITLE 30 CHAPTER 217, DESIGN CRITERIA FOR DOMESTIC WASTEWATER SYSTEMS SHALL GOVERN WHERE CONFLICTS EXIST EXCEPT WHERE CITY REQUIREMENTS ARE MORE STRINGENT.

2. ALL MANHOLES ARE TO BE PER CITY OF HOUSTON STANDARD DETAILS DRAWING NUMBERS 02082–01, 02082–02, 02082N–02, 02082–03, AND 02082N–03 UNLESS OTHERWISE NOTED. USE 2019 VERSION AS APPLICABLE.

3. SANITARY SEWER MANHOLES WILL HAVE BEDDING AND BACKFILL PER CITY OF HOUSTON STANDARD DETAILS DRAWING NO. 02317–08 UNLESS OTHERWISE NOTED.

4. THE SANITARY SEWER PVC PIPE SHALL BE ASTM D 3034 TYPE PSM SDR 26 GRAVITY SEWER PIPE, ASTM D2241 SDR 26 PRESSURE RATED SEWER PIPE OR AWWA C–900 DR–18 GREEN PVC PRESSURE RATED SEWER PIPE BASED ON CONSTRUCTION CONDITION REQUIREMENT AND CONFORMING TO ASTM D1784 AND CITY OF HOUSTON STANDARD SPECIFICATION SECTION 02506 POLYVINYL CHLORIDE PIPE.

5. WHEN SS PRESSURE RATED PVC PIPE IS USED ON WATERLINE (WL) CROSSING UNDER CONDITION 1 OF COH IDM TABLE 7.3, THE SAME TYPE OF D2241 SDR 26 PVC PIPE OR C–900 GREEN DR–18 PVC GREEN PRESSURED TO BE UTILIZING IN–BETWEEN TWO SS MH'S. OR TO UTILIZE A DI TRANSITION ADAPTER FOR THE CONNECTING OF ASTM D–3034 PVC GRAVITY PIPE TO DI–OD AWWA C–900 PVC PIPE CENTERED AT WL WHEN CONNECTING TWO DIFFERENT TYPES OF PVC PIPES FOR SEWER CONSTRUCTION.

6. AWWA C–900 DR–18 PVC PIPE USES EITHER AWWA C900 DR–18 PVC FITTINGS OR DIP FITTINGS.

7. ALL SANITARY SEWER LINES UNDER PROPOSED OR FUTURE PAVEMENT AND TO A POINT ONE (1) FOOT BACK OF ALL PROPOSED OR FUTURE CURBS SHALL HAVE BEDDING PER CITY OF HOUSTON STANDARD DETAILS DRAWING NUMBERS 02317–01, 02317–02, OR 02317–03 AS APPLICABLE, WITH 1 ½ SACK CEMENT/CY STABILIZED SAND BACKFILL UP TO THE BOTTOM OF THE PAVEMENT SUBGRADE. 100 PSI PERFORMANCE RESULTS ARE STILL REQUIRED.

8. ALL SANITARY SEWERS CROSSING WATER LINES WITH A CLEARANCE BETWEEN 12 INCHES AND 9 FEET SHALL HAVE A MINIMUM OF ONE 18? JOINT OF 150 PSI DUCTILE IRON OR (GREEN) C900 PVC PIPE MEETING ASTM SPECIFICATION D2241 CENTERED ON WATER LINE. WHEN WATER LINE IS BELOW SANITARY SEWER, PROVIDE MINIMUM 2 FOOT SEPARATION.

9. CONTRACTOR SHALL PROVIDE A MINIMUM HORIZONTAL CLEARANCE OF 9 FEET BETWEEN WATER LINES AND SANITARY SEWER MANHOLES AND LINES.

10. SANITARY SEWER MANHOLE RIMS OUTSIDE OF PROPOSED PAVING WILL BE SET 3" – 6" ABOVE THE SURROUNDING LEVEL FINISHED GRADE AFTER PAVING WITH SLOPED BACKFILL ADDED FOR STORM WATER TO DRAIN AWAY FROM MANHOLE RIM.

11. IN WET STABLE TRENCH AREAS USE BEDDING PER CITY OF HOUSTON STANDARD DETAILS DRAWING NUMBER 02317–02.

12. DEFLECTION TEST: DEFLECTION TESTS SHALL BE PERFORMED ON ALL FLEXIBLE AND SEMI–RIGID SEWER PIPE. THE TEST SHALL BE CONDUCTED AFTER THE FINAL BACKFILL HAS BEEN IN PLACE AT LEAST 30 DAYS. NO PIPE SHALL EXCEED A DEFLECTION OF 5% IF THE DEFLECTION TEST IS TO BE RUN USING A RIGID MANDREL, IT SHALL HAVE A DIAMETER EQUAL TO 95% OF THE INSIDE DIAMETER OF THE PIPE. THE TEST SHALL BE PERFORMED AS PER 30 TAC 217.57 LATEST AMENDMENT AND WITHOUT MECHANICAL PULLING DEVICES. NO BALL–TYPE MANDREL IS ALLOWED.

13. INFILTRATION, EXFILTRATION OR LOW–PRESSURE AIR TEST: EITHER OF THE FOLLOWING TESTS SHALL BE PERFORMED AS PER TAC, TITLE 30 217.57 WITHIN THE SPECIFIED TOLERANCES ON ALL GRAVITY SEWERS.

A. INFILTRATION OR EXFILTRATION TEST: TOTAL LEAKAGE AS DETERMINED BY A HYDROSTATIC HEAD TEST SHALL NOT EXCEED 50 GALLONS PER INCH DIAMETER PER MILE OF PIPE PER 24 HOURS AT A MINIMUM TEST HEAD OF TWO (2) FEET.

B. LOW–PRESSURE AIR TEST: PERFORM TEST ACCORDING TO UNI–B–6–90 OR OTHER APPROPRIATE PROCEDURES. FOR SECTIONS OF PIPE LESS THAN 36" (INCH) AVERAGE INSIDE DIAMETER, THE MINIMUM ALLOWABLE TIME FOR PRESSURE DROP FROM 3.5 P.S.I.G. TO 2.5 P.S.I.G. SHALL BE AS FOLLOWS:

6" 340 SECONDS OR 0.855(L) FOR TEST LENGTHS GREATER THAN 398'
8" 454 SECONDS OR 1.520(L) FOR TEST LENGTHS GREATER THAN 298'
10" 567 SECONDS OR 2.374(L) FOR TEST LENGTHS GREATER THAN 239'
12" 680 SECONDS OR 3.419(L) FOR TEST LENGTHS GREATER THAN 199'
15" 850 SECONDS OR 5.342(L) FOR TEST LENGTHS GREATER THAN 159'
18" 1020 SECONDS OR 7.693(L) FOR TEST LENGTHS GREATER THAN 133'

WHERE L = LENGTH OF LINE OF SAME PIPE SIZE IN FEET.

14. SAN. S. E. INDICATES SANITARY SEWER EASEMENT

15. FOR SANITARY MANHOLE (MH) RIMS SET INSIDE OF OR @ CURB & GUTTER PAVEMENT AND/OR BELOW T.C., MH RIMS WILL BE SET FLUSHED WITH AN ABUTTING PAVED SURFACE. THE (VALCUN, NEENAH OR EQUAL) HEAVY DUTY BOLTED SOLID MH COVER SHALL BE PROPERLY (AND SECURELY) ATTACHED AND SEALED TO ITS COMPATIBLE GASKETED FRAME BY USING BOTH A NEOPRENE GASKET AND (AT LEAST) 4 COUNTER–SUNK HEX?HEAD COARSE THREADED ½?–13 UNC STAINLESS STEEL BOLTS. THE HEAVY DUTY FRAME MH COVER SHALL BE SOLID (NO AIR HOLES). SAID FRAME SHALL BE BOTH EMBEDDED INTO THE MH'S TOP ALSO SECURELY ANCHORED TO THE UNDERLYING MH STRUCTURE WITH EITHER SECURELY ATTACHED EMBEDDED ANCHOR BOLTS OR THE CONCRETE MH'S EXPOSED REBARS WELDED TO THE FRAME OR OTHER EQUALLY SECURED METHODS TO PREVENT MH COVER/FRAME BLOW–OFFS/EJECTIONS.

1. ACCORDANCE WITH THE LATEST EDITION OF THE PUBLICATIONS STANDARD CONSTRUCTION SPECIFICATIONS FOR WASTEWATER COLLECTION SYSTEMS, WATER LINES, STORM DRAINAGE AND STREET PAVING, AND STANDARD CONSTRUCTION DETAILS FOR WASTEWATER COLLECTION SYSTEMS. WATER LINES, STORM DRAINAGE, AND STREET PAVING PUBLISHED BY HOUSTON PUBLIC WORKS.

2. THE GEOTECHNICAL INVESTIGATION FOR THIS PROJECT WAS CONDUCTED IN ACCORDANCE WITH FORT BEND COUNTY DESIGN STANDARDS.

3. UTILITIES PRESENTED ON THESE DRAWINGS ARE SHOWN BASED ON THE BEST AVAILABLE INFORMATION. CONTRACTOR SHALL VERIFY THE EXACT LOCATIONS IN THE FIELD PRIOR TO COMMENCING CONSTRUCTION. CONTRACTOR SHALL NOTIFY TEXAS ONE CALL AT 713–223–4567/811 OR 800–344–8377 AND LONE STAR NOTIFICATION CENTER AT 800–669–8344 AT LEAST 48 HOURS BEFORE PROCEEDING WITH ANY EXCAVATION. UTILITIES MARKED WITHIN THE PUBLIC RIGHT OF WAY OR IN EASEMENTS SHALL COMPLY WITH TAC TITLE 16, PART 1, CHAPTER 18, RULE 818.6 AND THE AMERICAN PUBLIC WORKS ADMINISTRATION (APWA) UNIFORM COLOR CODE.

4. CONTRACTOR SHALL BE RESPONSIBLE FOR DAMAGES TO EXISTING WATER, WASTEWATER, STORM WATER LINES AND TRAFFIC CONTROL DEVICES. DAMAGES SHALL BE REPAIRED IN ACCORDANCE WITH THE HOUSTON PUBLIC WORKS, STANDARD CONSTRUCTION SPECIFICATIONS FOR WASTEWATER COLLECTION SYSTEM, WATER LINES, STORM DRAINAGE, AND STREET PAVING AND STANDARD CONSTRUCTION DETAILS FOR WASTEWATER COLLECTION SYSTEMS, WATER LINES, STORM DRAINAGE, AND STREET PAVING, REFERENCED ABOVE, AT NO ADDITIONAL COST.

5. CONTRACTOR SHALL NOTIFY THE OFFICE OF THE COUNTY ENGINEER, FORT BEND COUNTY @ XXX–XXX–XXXX OR FOR INSPECTION AT LEAST 48 HOURS PRIOR TO COMMENCING CONSTRUCTION.

6. ADEQUATE DRAINAGE SHALL BE MAINTAINED AT ALL TIMES DURING CONSTRUCTION AND ANY DRAINAGE DITCH OR STRUCTURE DISTURBED DURING CONSTRUCTION SHALL BE RESTORED TO EXISTING CONDITIONS OR BETTER.

7. CONTRACTOR SHALL TAKE NECESSARY PRECAUTIONS TO PROTECT ROOT SYSTEMS OF SHRUBS, PLANTS AND TREES ALONG THE AREA OF EXCAVATION.

8. CONTRACTOR SHALL COMPLY WITH LATEST EDITION OF OSHA REGULATIONS AND THE STATE OF TEXAS LAWS CONCERNING EXCAVATION.

9. CONTRACTOR SHALL MAINTAIN A SET OF REDLINE DRAWINGS AND RECORD AS–BUILT CONDITIONS DURING CONSTRUCTION. THESE REDLINE MARKED UP DRAWINGS WILL BE SUBMITTED TO THE DESIGN CONSULTANT WHO WILL MAKE THE CHANGES ON THE ORIGINAL TRACINGS, LABEL EACH SHEET IN THE SET AS "RECORD DRAWINGS", AND RETURN IT TO THE OFFICE OF THE CITY ENGINEER.

SWPPP CONSTRUCTION NOTES

1. CONTRACTOR SHALL IMPLEMENT INLET PROTECTION DEVICES AND REINFORCED FILTER FABRIC BARRIER ALONG ROAD AND SIDE DITCHES AT LOCATIONS SHOWN ON THE TYPICAL STORM WATER POLLUTION PREVENTION (SWPP) PLANS TO KEEP SILT AND OR EXCAVATED MATERIALS FROM ENTERING INTO THE STORM WATER INLETS AND DITCHES EVENTUALLY POLLUTING THE RECEIVING STORM.

2. DURING THE EXCAVATION PHASE OF THE PROJECT, CONTRACTOR SHALL SCHEDULE THE WORK IN SHORT SEGMENTS SO THAT EXCAVATION MATERIAL CAN BE QUICKLY HAULED AWAY FROM THE SITE AND TO PREVENT IT FROM STAYING UNCOLLECTED ON THE EXISTING PAVEMENT. ANY LOOSE EXCAVATED MATERIAL WHICH FALLS ON PAVEMENTS OR DRIVEWAYS SHALL BE SWEPT BACK INTO THE EXCAVATED AREA.

3. CONTRACTOR SHALL CLEAN UP THE EXISTING STREET INTERSECTIONS AND DRIVEWAYS DAILY, AS NECESSARY, TO REMOVE ANY EXCESS MUD, SILT OR ROCK TRACKED FORM THE EXCAVATED AREA.

4. CONTRACTOR SHALL FOLLOW GOOD HOUSEKEEPING PRACTICES DURING THE CONSTRUCTION OF THE PROJECT, ALWAYS CLEANING UP DIRT AND LOOSE MATERIAL AS CONSTRUCTION PROGRESSES.

5. CONTRACTOR TO INSPECT AND MAINTAIN THE AREAS LISTED BELOW AT LEAST ONCE EVERY FOURTEEN (14) CALENDAR DAYS AND WITHIN 24 HOURS OF THE END OF A STORM EVENT OF 0.5 INCHES OR GREATER.

?DISTURBED AREAS OF THE CONSTRUCTION SITE THAT HAVE NOT BEEN FINALLY STABILIZED.
?AREAS USED FOR STORAGE OF MATERIALS THAT ARE EXPOSED TO PRECIPITATION.
?STRUCTURAL CONTROL MEASURES.
?LOCATIONS WHERE VEHICLES ENTER OR EXIT THE SITE.

6. CONTRACTOR TO BE RESPONSIBLE TO MAINTAIN EXISTING DITCHES AND OR CULVERTS FOR UNOBSTRUCTED DRAINAGE AT ALL TIMES. WHERE SODDING IS DISTURBED BY EXCAVATION ON BACKFILLING OPERATIONS, SUCH AREAS SHALL BE REPLACED BY SEEDING OR SODDING. SLOPES 4:1 OR STEEPER SHALL BE REPLACED BY BLOCK SODDING.

TRAFFIC NOTES

CONTRACTOR OR OWNER SHALL SUBMIT TRAFFIC CONTROL PLANS WITH THE MOBILITY PERMIT APPLICATION. THE PLANS SHALL BE DRAWN TO SCALE AND SEALED BY A LICENSED PROFESSIONAL ENGINEER IN THE STATE OF TEXAS.

THE GENERAL NOTES THAT SHALL BE INCLUDED ON THE TRAFFIC CONTROL PLAN CAN BE FOUND IN FORT BEND COUNTY DESIGN STANDARDS.

1. THE CONTRACTOR SHALL PROVIDE AND INSTALL TRAFFIC CONTROL DEVICES IN CONFORMANCE WITH PART VI OF THE TEXAS MANUAL ON UNIFORM TRAFFIC CONTROL DEVICES (TMUTCD) LATEST EDITION WITH REVISIONS DURING THE ENTIRE CONSTRUCTION PERIOD.

2. NO WORK SHALL BE PERFORMED IN RESIDENTIAL AREAS FROM 7:00PM TO 7:00AM.

3. CONTRACTOR SHALL MAINTAIN APPROVED NUMBER OF LANES OF TRAFFIC IN EACH DIRECTION DURING CONSTRUCTION WORKING HOURS. TRAFFIC CONTROL PLANS SHALL INCLUDE ONE–WAY AND/OR DETOUR PLANS. CONTRACTOR SHALL MAINTAIN ADA COMPLAINT PEDESTRIAN ACCESS TO BUS STOPS AND ADEQUATE BUS ACCESS TO THE BUS STOP.

4. CONTRACTOR SHALL COVER OPEN PAVEMENT EXCAVATIONS FOR MINOR UTILITY WORK WITH ANCHORED STEEL PLATES DURING NON–WORKING HOURS, OPEN LANES FOR NORMAL TRAFFIC FLOW WHEN FEASIBLE.

5. CONTRACTOR SHALL SECURE LANE/SIDEWALK/BICYCLE FACILITY CLOSURE PERMITS FROM TRANSPORTATION & DRAINAGE OPERATIONS (MOBILITY PERMIT SECTION AT WWW.GIMS.HOUSTONTX.GOV) BEFORE IMPLEMENTING THE TRAFFIC CONTROL PLAN. THE APPLICATION MUST BE SUBMITTED AT LEAST TEN BUSINESS DAYS PRIOR TO THE IMPLEMENTATION OF THE TRAFFIC CONTROL PLAN AND/OR BEGINNING CONSTRUCTION WORK. THE CONTRACTOR SHALL PROVIDE TRAFFIC CONTROL PLANS, CONSTRUCTION SEQUENCING, AND CONSTRUCTION SCHEDULE WITH THE APPLICATION.

6. CONTRACTOR SHALL HAVE APPROVED TRAFFIC CONTROL PLAN AND PERMIT AT THE JOB SITE FOR INSPECTION AT ALL TIMES

7. ACCESS TO DRIVEWAYS ADJACENT TO THE CONSTRUCTION WORK ZONE SHALL BE MAINTAINED AT ALL TIMES AS MUCH AS POSSIBLE. ADDITIONAL CONES AND/OR DELINEATORS MAY BE REQUIRED TO DELINEATE THE DRIVEWAY ACCESS ROUTE THROUGH THE CONSTRUCTION WORK ZONE. A MINIMUM OF ONE TRAVEL LANE SHALL BE MAINTAINED ACROSS THE DRIVEWAY, UNLESS PRIOR WRITTEN APPROVAL IS OBTAINED FROM THE CITY OF HOUSTON.

8. ADDITIONAL OFF DUTY POLICE OFFICERS/FLAGGERS MAY BE REQUESTED TO DIRECT TRAFFIC WHEN LANES ARE BLOCKED AT THE DIRECTION OF THE CITY EVEN IF THEY ARE NOT SPECIFICALLY IDENTIFIED ON THE PROJECT PLANS.

CENTERPOINT ENERGY NOTES
CAUTION: UNDERGROUND GAS FACILITIES
LOCATIONS OF CENTERPOINT ENERGY MAIN LINES (TO INCLUDE CENTERPOINT ENERGY, INTRASTATE PIPELINE, LLC. WHERE APPLICABLE) ARE SHOWN IN AN APPROXIMATE LOCATION ONLY. SERVICE LINES ARE USUALLY NOT SHOWN. OUR SIGNATURE ON THESE PLANS ONLY INDICATES THAT OUR FACILITIES ARE SHOWN IN APPROXIMATE LOCATION. IT DOES NOT IMPLY THAT A CONFLICT ANALYSIS HAS BEEN MADE. THE CONTRACTOR SHALL CONTACT THE UTILITY COORDINATING COMMITTEE AT 1–800–545–6005 OR 811 A MINIMUM OF 48 HOURS PRIOR TO CONSTRUCTION TO HAVE MAIN AND SERVICE LINES FIELD LOCATED.

–WHEN CENTERPOINT ENERGY PIPELINE MARKINGS ARE NOT VISIBLE, CALL (713) 207–5463 OR (713) 945–8037 (7:00 AM TO 4:30 PM) FOR STATUS OF LINE LOCATION REQUEST BEFORE EXCAVATION BEGINS.

–WHEN EXCAVATING WITHIN EIGHTEEN INCHES (18") OF THE INDICATED LOCATION OF CENTERPOINT ENERGY
FACILITIES, ALL EXCAVATION MUST BE ACCOMPLISHED USING NON–MECHANIZED EXCAVATION PROCEDURES.

–WHEN CENTERPOINT ENERGY FACILITIES ARE EXPOSED, SUFFICIENT SUPPORT MUST BE PROVIDED TO THE FACILITIES TO PREVENT EXCESSIVE STRESS ON THE PIPING.
–FOR EMERGENCIES REGARDING GAS LINES CALL (713) 659–3552 OR (713) 207–4200.

THE CONTRACTOR IS FULLY RESPONSIBLE FOR ANY DAMAGES CAUSED BY THE CONTRACTOR'S FAILURE TO EXACTLY LOCATE AND PRESERVE THESE UNDERGROUND FACILITIES.

WARNING: OVERHEAD ELECTRICAL FACILITIES

OVERHEAD LINES MAY EXIST ON THE PROPERTY. THE LOCATION OF OVERHEAD LINES HAS NOT BEEN SHOWN ON THESE DRAWINGS AS THE LINES ARE CLEARLY VISIBLE, BUT YOU SHOULD LOCATE THEM PRIOR TO BEGINNING ANY CONSTRUCTION. TEXAS LAW, SECTION 752, HEALTH & SAFETY CODE FORBIDS ACTIVITIES THAT OCCUR IN CLOSE PROXIMITY TO HIGH VOLTAGE LINES, SPECIFICALLY:

? ANY ACTIVITY WHERE PERSON OR THINGS MAY COME WITHIN SIX (6) FEET OF LIVE OVERHEAD HIGH VOLTAGE
LINES; AND
? OPERATING A CRANE, DERRICK, POWER SHOVEL, DRILLING RIG, PILE DRIVER, HOISTING EQUIPMENT, OR SIMILAR
APPARATUS WITHIN 10 FEET OF LIVE OVERHEAD HIGH VOLTAGE LINES.

PARTIES RESPONSIBLE FOR THE WORK, INCLUDING CONTRACTORS, ARE LEGALLY RESPONSIBLE FOR THE SAFETY OF
CONSTRUCTION WORKERS UNDER THIS LAW. THIS LAW CARRIES BOTH CRIMINAL AND CIVIL LIABILITY. TO ARRANGE FOR LINES TO BE TURNED OFF OR REMOVED CALL CENTERPOINT ENERGY AT (713) 207–2222.

ACTIVITIES ON OR ACROSS CENTERPOINT ENERGY FEE OR EASEMENT PROPERTY NO APPROVAL TO USE, CROSS OR OCCUPY CENTERPOINT FEE OR EASEMENT PROPERTY IS GIVEN. IF YOU NEED TO USE CENTERPOINT PROPERTY, PLEASE CONTACT OUR SURVEY & RIGHT OF WAY DIVISION AT (713) 207–6348 OR (713) 207–5769.

AT&T TEXAS/SWBT FACILITIES

1. THE LOCATIONS OF AT&T TEXAS/SWBT FACILITIES ARE SHOWN IN AN APPROXIMATE WAY ONLY. THE CONTRACTOR SHALL DETERMINE THE EXACT LOCATION BEFORE COMMENCING WORK. HE AGREES TO BE FULLY RESPONSIBLE FOR ANY AND ALL DAMAGES WHICH MIGHT BE OCCASIONED BY THIS FAILURE TO EXACTLY LOCATE AND PRESERVE THESE UNDERGROUND UTILITIES.

2. THE CONTRACTOR SHALL CALL 1–800–344–8377 A MINIMUM OF 48 HOURS PRIOR TO CONSTRUCTION TO HAVE
UNDERGROUND LINES FIELD LOCATED.

3. WHEN EXCAVATING WITHIN EIGHTEEN INCHES (18') OF THE INDICATED LOCATION OF AT&T TEXAS/SWBT
FACILITIES, ALL EXCAVATIONS MUST BE ACCOMPLISHED USING NON–MECHANIZED EXCAVATION PROCEDURES. WHEN BORING, THE CONTRACTOR SHALL EXPOSE THE AT&T TEXAS/SWBT FACILITIES.

4. WHEN AT&T TEXAS/SWBT FACILITIES ARE EXPOSED, THE CONTRACTOR WILL PROVIDE SUPPORT TO PREVENT DAMAGE TO THE CONDUIT DUCTS OR CABLES. WHEN EXCAVATING NEAR TELEPHONE POLES THE CONTRACTOR SHALL BRACE THE POLE FOR SUPPORT.

5. THE PRESENCE OR ABSENCE OF AT&T TEXAS/SWBT UNDERGROUND CONDUIT FACILITIES OR BURIED CABLE FACILITIES SHOWN ON THESE PLANS DOES NOT MEAN THAT THERE ARE NO DIRECT BURIED CABLES OR OTHER CABLES IN CONDUIT IN THE AREA.

6. PLEASE CONTACT THE AT&T TEXAS DAMAGE PREVENTION MANAGER MR. ROOSEVELT LEE JR AT (713)567–4552 OR E–MAIL HIM AT RL7259@ATT.COM, IF THERE ARE QUESTIONS ABOUT BORING OR EXCAVATING NEAR OUR AT&T TEXAS/SWBT FACILITIES.

19251 Purus Dr.
Porter, TX 77365

WECS

TEXAS BOARD OF PROFESSIONAL ENGINEERS F–19379
4611 BIGGAM DRIVE
FRESNO, TEXAS 77545
(832) 443–4150

BATES ALLEN PARK
BLACK COWBOY MUSEUM
630 CHARLIE ROBERTS LANE

STATE OF TEXAS
GERALD PAUL WILSON
98053
LICENSED PROFESSIONAL ENGINEER

Drawing Date: 06/03/2024
Drawn By: SMA
Checked By: DDV
Scale:

Revisions:

DESCRIPTION	
ISSUE FOR BID & CONSTRUCTION	09/23/2024

CONSTRUCTION NOTES

C0.2

FORT BEND COUNTY, TEXAS
ISAAC McGARY LEAGUE, ABSTRACT NO. 58

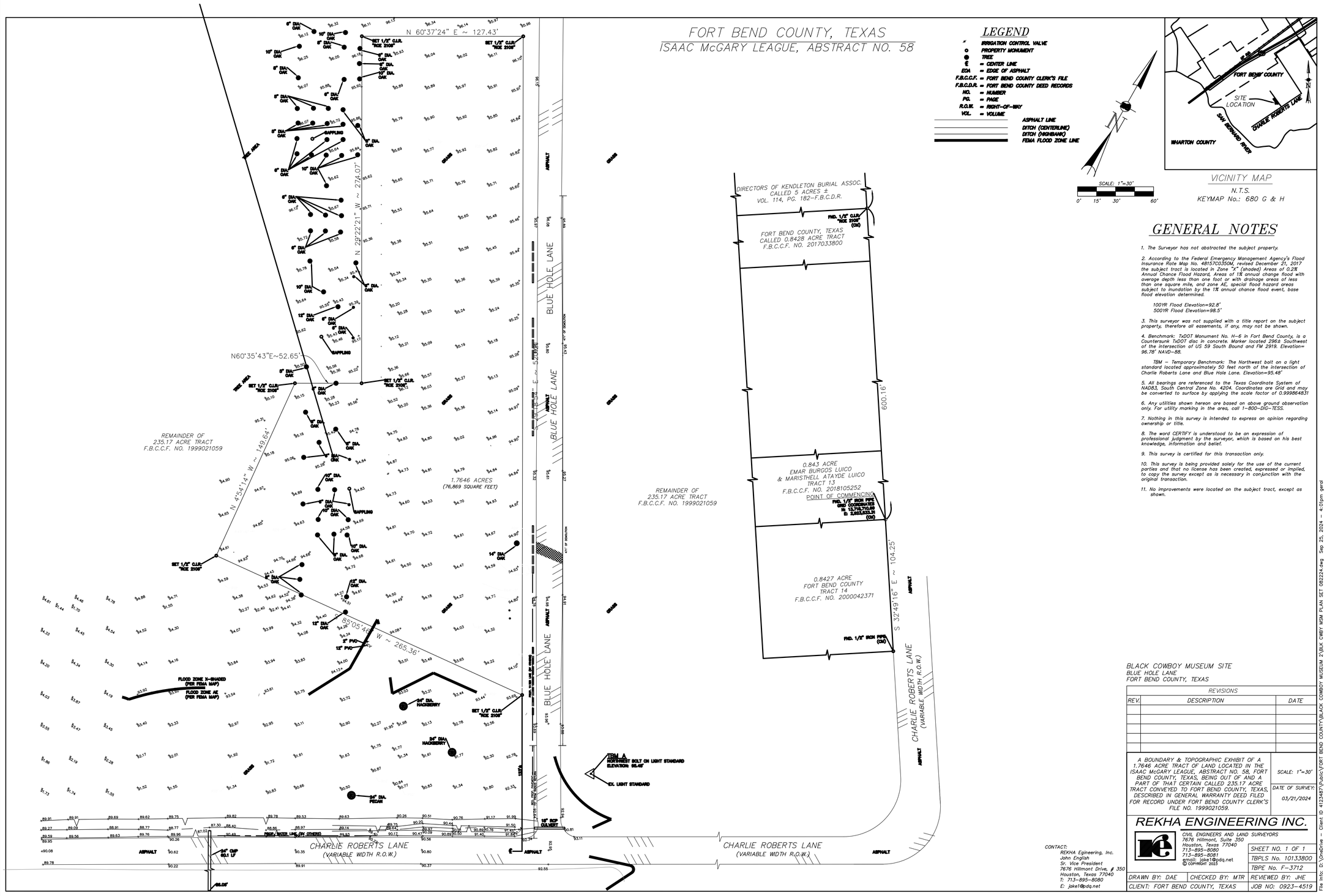

LEGEND

⁄	IRRIGATION CONTROL VALVE
○	PROPERTY MONUMENT
●	TREE
℄	= CENTER LINE
EOA	= EDGE OF ASPHALT
F.B.C.C.F.	= FORT BEND COUNTY CLERK'S FILE
F.B.C.D.R.	= FORT BEND COUNTY DEED RECORDS
NO.	= NUMBER
PG.	= PAGE
R.O.W.	= RIGHT-OF-WAY
VOL.	= VOLUME

ASPHALT LINE
DITCH (CENTERLINE)
DITCH (HIGHBANK)
FEMA FLOOD ZONE LINE

VICINITY MAP
N.T.S.
KEYMAP No.: 680 G & H

GENERAL NOTES

1. The Surveyor has not abstracted the subject property.

2. According to the Federal Emergency Management Agency's Flood Insurance Rate Map No. 48157C0350M, revised December 21, 2017 the subject tract is located in Zone "X" (shaded) Areas of 0.2% Annual Chance Flood Hazard, Areas of 1% annual change flood with average depth less than one foot or with drainage areas of less than one square mile, and zone AE, special flood hazard areas subject to inundation by the 1% annual chance flood event, base flood elevation determined.

   100YR Flood Elevation=92.8'
   500YR Flood Elevation=98.5'

3. This surveyor was not supplied with a title report on the subject property, therefore all easements, if any, may not be shown.

4. Benchmark: TxDOT Monument No. H–6 in Fort Bend County, is a Countersunk TxDOT disc in concrete. Marker located 296± Southwest of the intersection of US 59 South Bound and FM 2919. Elevation= 96.78' NAVD–88.

   TBM – Temporary Benchmark: The Northwest bolt on a light standard located approximately 50 feet north of the intersection of Charlie Roberts Lane and Blue Hole Lane. Elevation=95.48'

5. All bearings are referenced to the Texas Coordinate System of NAD83, South Central Zone No. 4204. Coordinates are Grid and may be converted to surface by applying the scale factor of 0.999864831

6. Any utilities shown hereon are based on above ground observation only. For utility marking in the area, call 1–800–DIG–TESS.

7. Nothing in this survey is intended to express an opinion regarding ownership or title.

8. The word CERTIFY is understood to be an expression of professional judgment by the surveyor, which is based on his best knowledge, information and belief.

9. This survey is certified for this transaction only.

10. This survey is being provided solely for the use of the current parties and that no license has been created, expressed or implied, to copy the survey except as is necessary in conjunction with the original transaction.

11. No improvements were located on the subject tract, except as shown.

BLACK COWBOY MUSEUM SITE
BLUE HOLE LANE
FORT BEND COUNTY, TEXAS

REVISIONS

REV.	DESCRIPTION	DATE

A BOUNDARY & TOPOGRAPHIC EXHIBIT OF A 1.7646 ACRE TRACT OF LAND LOCATED IN THE ISAAC McGARY LEAGUE, ABSTRACT NO. 58, FORT BEND COUNTY, TEXAS, BEING OUT OF AND A PART OF THAT CERTAIN CALLED 235.17 ACRE TRACT CONVEYED TO FORT BEND COUNTY, TEXAS, DESCRIBED IN GENERAL WARRANTY DEED FILED FOR RECORD UNDER FORT BEND COUNTY CLERK'S FILE NO. 1999021059.

SCALE: 1"=30'
DATE OF SURVEY: 03/21/2024

REKHA ENGINEERING INC.
CIVIL ENGINEERS AND LAND SURVEYORS
7676 Hillmont, Suite 350
Houston, Texas 77040
713–895–8080
713–895–8081
email: jake1@pdq.net
© COPYRIGHT 2023

CONTACT:
REKHA Egineering, Inc.
John English
Sr. Vice President
7676 Hillmont Drive, # 350
Houston, Texas 77040
T: 713–895–8080
E: jake1@pdq.net

SHEET NO. 1 OF 1	
TBPLS No. 10133800	
TBPE No. F–3712	
DRAWN BY: DAE	CHECKED BY: MTR
REVIEWED BY: JHE	
CLIENT: FORT BEND COUNTY, TEXAS	JOB NO: 0923–4519

19251 Purus Dr.
Porter, TX 77365

WECS
TEXAS BOARD OF PROFESSIONAL ENGINEERS F–19379
4611 BIGGAM DRIVE
FRESNO, TEXAS 77545
(832) 443–4150

BATES ALLEN PARK
BLACK COWBOY MUSEUM
630 CHARLIE ROBERTS LANE

STATE OF TEXAS
GERALD PAUL WILSON
98053
LICENSED PROFESSIONAL ENGINEER

Drawing Date: 06/03/2024
Drawn By: SMA
Checked By: DDV
Scale:

Revisions:

DESCRIPTION	
ISSUE FOR BID & CONSTRUCTION	09/23/2024

TOPOGRAPHIC SURVEY

C1.0

File Info: D:\OneDrive – Client ID 4123457\Public\FORT BEND COUNTY\BLACK COWBOY MUSEUM 2\BLK CWBY MSM PLAN SET 092324.dwg Sep 25, 2024 – 4:01pm geral

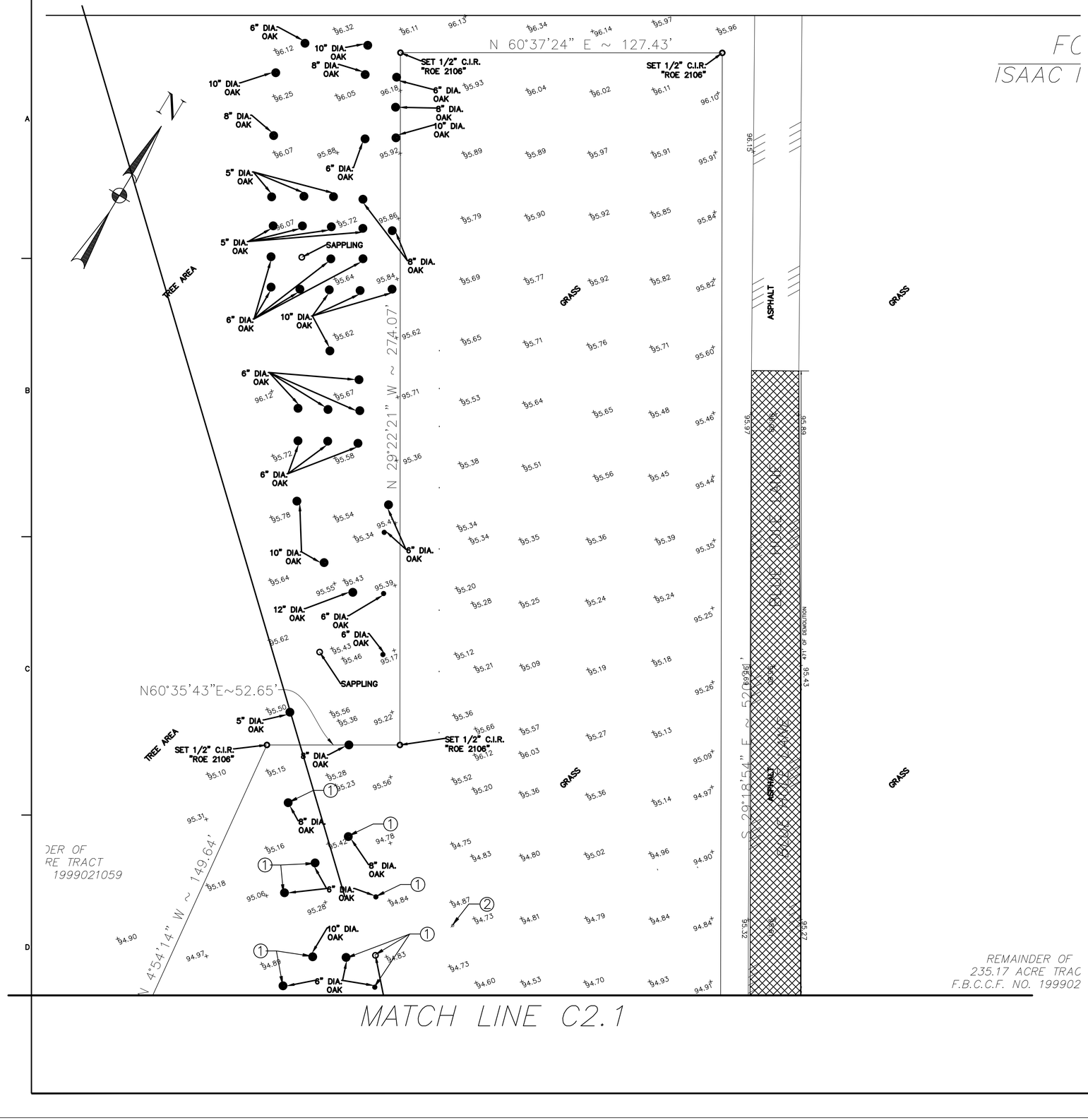

REMOVE 471' FULL DEPTH OF EXISTING ASPHALT ROADWAY AND DISPOSED.

GENERAL NOTES:

1. CONTRACTOR SHALL SECURE ALL REQUIRED PERMITS AND PROVIDE ALL REQUIRED NOTIFICATIONS PRIOR TO WORK.
2. ALL DEMOLITION WORK TO BE PERFORMED WITHIN PROJECT PROPERTY LINES UNLESS AUTHORIZED OTHERWISE BY APPLICABLE PROPERTY OWNER. NO WORK TO BE PERFORMED WITHIN ADJACENT STREET ROW UNTIL APPLICABLE PERMITS OBTAINED AND NOTIFICATIONS ARE PROVIDED.
3. ALL SWPPP CONTROLS TO BE INSTALLED PRIOR TO DEMOLITION WORK AS APPLICABLE, RE: SHT C7.0 & C8.1 DTL FBCED 54.
4. REMOVE ALL ITEMS AS REQUIRED TO FACILITATE PROPOSED CONSTRUCTION. NOTIFY ENGINEER AND OBTAIN APPROVAL PRIOR TO WORK FOR REMOVAL OF ANY ITEMS FOUND NOT INDICATED ON THIS PLAN.
5. REMNANTS OF BURIED STRUCTURES OR ABANDONED UTILITIES SHALL BE REMOVED TO A MINIMUM OF 24 INCHES BELOW FINAL SUBGRADE ELEVATION UNLESS INDICATED OTHERWISE. ALL ABANDONED UTILITIES AUTHORIZED TO REMAIN SHALL BE CAPPED WATERTIGHT.
6. ALL SOILS DISTURBED DURING THE DEMOLITION OF STRUCTURES, TREES, OR UNDERGROUND UTILITIES SHALL BE REMOVED OR REPLACED AND COMPACTED IN ACCORDANCE WITH PROJECT SPECIFICATIONS AND GEOTECHNICAL REPORT RECOMMENDATIONS.

KEY NOTES:

① REMOVE AND DISPOSE EXIST. TREE.

② VERIFY AND RELOCATE EXISTING WATER STRUCTURE AS DIRECTED BY THE ENGINEER.

19251 Purus Dr.
Porter, TX 77365

WECS

TEXAS BOARD OF PROFESSIONAL ENGINEERS F-19379
4611 BIGGAM DRIVE
FRESNO, TEXAS 77545
(832) 443-4150

BATES ALLEN PARK
BLACK COWBOY MUSEUM
630 CHARLIE ROBERTS LANE

STATE OF TEXAS
GERALD PAUL WILSON
98053
LICENSED
PROFESSIONAL ENGINEER

Drawing Date: 06/03/2024
Drawn By: SMA
Checked By: DDV
Scale: 1" = 200'-0"

Revisions:

DESCRIPTION	
ISSUE FOR BID & CONSTRUCTION	09/23/2024

DEMOLITION PLAN

C2.0

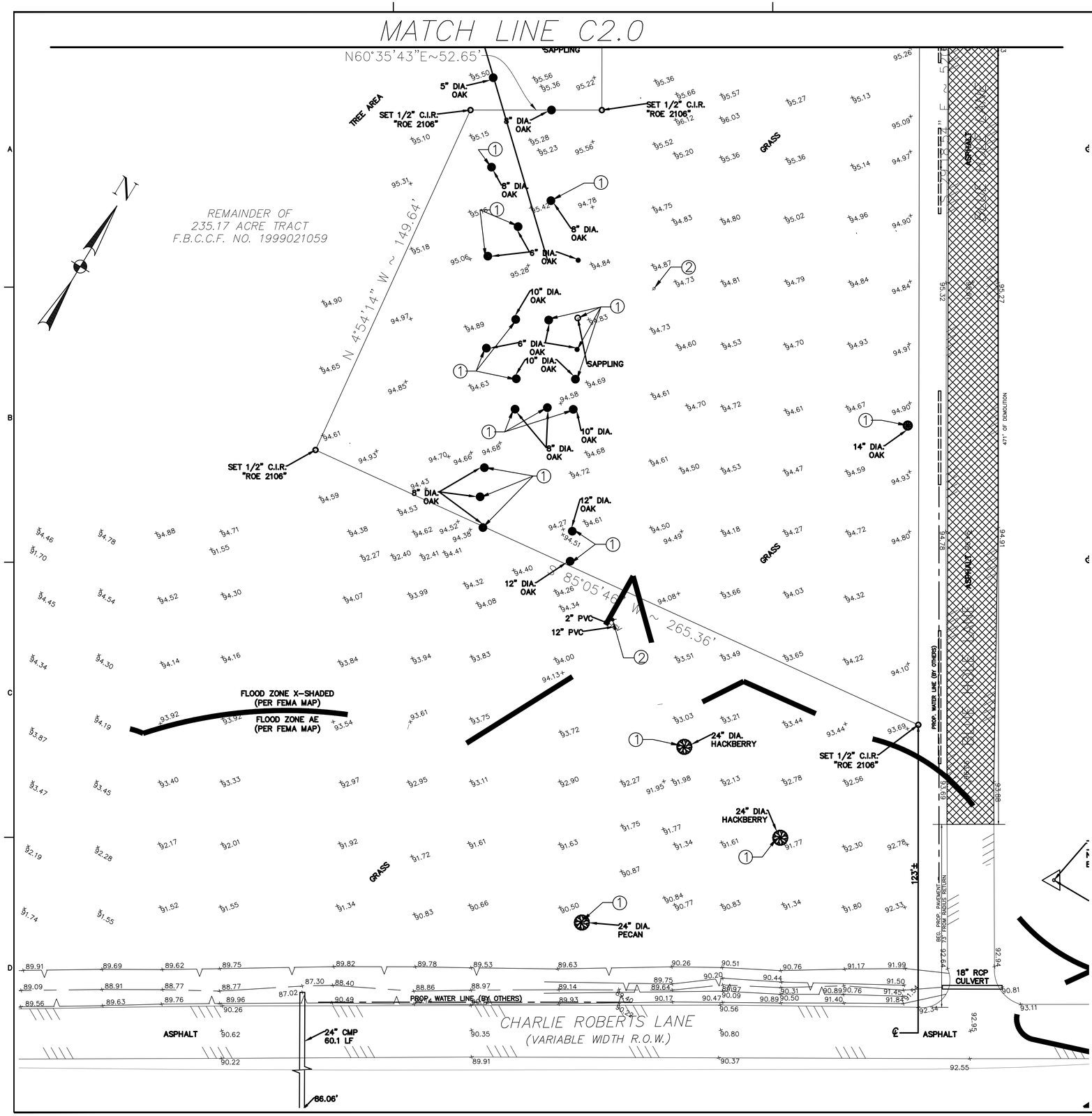

REMOVE FULL DEPTH OF EXIST. ASPHALT ROADWAY AND DISPOSED.

GENERAL NOTES:

1. CONTRACTOR SHALL SECURE ALL REQUIRED PERMITS AND PROVIDE ALL REQUIRED NOTIFICATIONS PRIOR TO WORK.
2. ALL DEMOLITION WORK TO BE PERFORMED WITHIN PROJECT PROPERTY LINES UNLESS AUTHORIZED OTHERWISE BY APPLICABLE PROPERTY OWNER. NO WORK TO BE PERFORMED WITHIN ADJACENT STREET ROW UNTIL APPLICABLE PERMITS OBTAINED AND NOTIFICATIONS ARE PROVIDED.
3. ALL SWPPP CONTROLS TO BE INSTALLED PRIOR TO DEMOLITION WORK AS APPLICABLE, RE: SHT C7.0 & C8.1 DTL FBCED 54.
4. REMOVE ALL ITEMS AS REQUIRED TO FACILITATE PROPOSED CONSTRUCTION. NOTIFY ENGINEER AND OBTAIN APPROVAL PRIOR TO WORK FOR REMOVAL OF ANY ITEMS FOUND NOT INDICATED ON THIS PLAN.
5. REMNANTS OF BURIED STRUCTURES OR ABANDONED UTILITIES SHALL BE REMOVED TO A MINIMUM OF 24 INCHES BELOW FINAL SUBGRADE ELEVATION UNLESS INDICATED OTHERWISE. ALL ABANDONED UTILITIES AUTHORIZED TO REMAIN SHALL BE CAPPED WATERTIGHT.
6. ALL SOILS DISTURBED DURING THE DEMOLITION OF STRUCTURES, TREES, OR UNDERGROUND UTILITIES SHALL BE REMOVED OR REPLACED AND COMPACTED IN ACCORDANCE WITH PROJECT SPECIFICATIONS AND GEOTECHNICAL REPORT RECOMMENDATIONS.

KEY NOTES:

① REMOVE AND DISPOSE EXIST. TREE.

② VERIFY AND RELOCATE EXISTING WATER STRUCTURE AS DIRECTED BY THE ENGINEER.

19251 Purus Dr.
Porter, TX 77365

WECS

TEXAS BOARD OF PROFESSIONAL ENGINEERS F-19379
4611 BIGGAM DRIVE
FRESNO, TEXAS 77545
(832) 443-4150

BATES ALLEN PARK
BLACK COWBOY MUSEUM
630 CHARLIE ROBERTS LANE

STATE OF TEXAS
GERALD PAUL WILSON
98053
LICENSED PROFESSIONAL ENGINEER

Drawing Date: 06/03/2024
Drawn By: SMA
Checked By: DDV
Scale: 1" = 200'-0"

Revisions:

DESCRIPTION	
ISSUE FOR BID & CONSTRUCTION	09/23/2024

DEMOLITION PLAN

C2.1

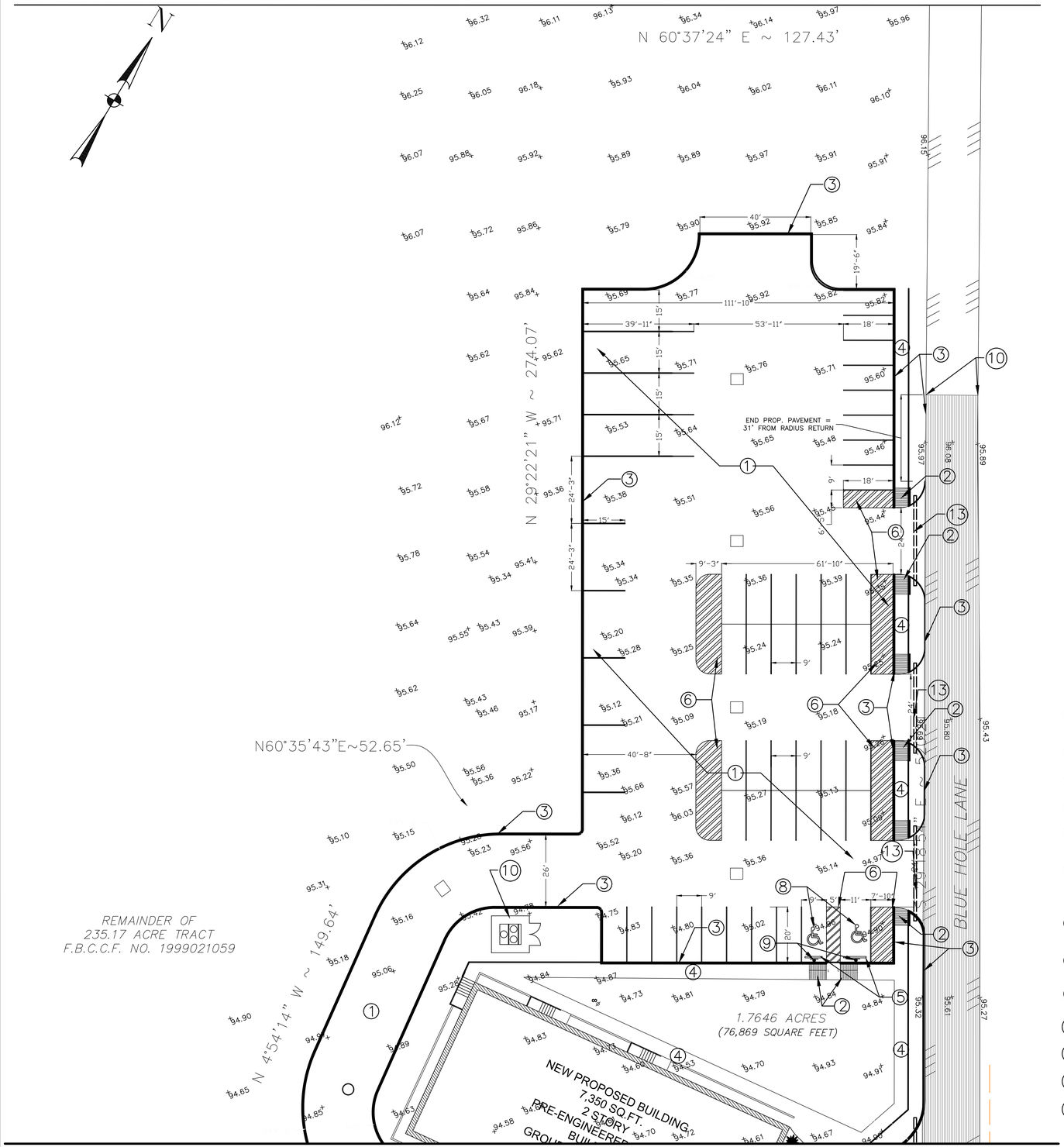

LEGEND:

- PROP. ASPHALT RECONSTRUCTION
- PROP. INLET
- PROP. STM SWR MANHOLE
- PROP. SAN SWR MANHOLE

GENERAL NOTES:

1. ALL DIMENSIONS AND COORDINATES ARE TO FACE OF CURB OR OUTSIDE OF BUILDING FACE UNLESS NOTED OTHERWISE.
2. REFER TO SHT C1.0 – TOPOGRAPHIC SURVEY PREPARED BY REKHA ENGINEERING, INC., DATED 03, 21, 2024 FOR EXISTING CONDITIONS, SURVEY BENCHMARKS, HORIZONTAL AND VERTICAL CONTROL.
3. ALL DISTURBED GRASS AND NON–PAVED AREAS NOT INDICATED FOR IMPROVEMENT BY LANDSCAPING PLANS ARE TO BE STABILIZED AND RESTORED WITH 4" MINIMUM TOPSOIL AND SODDING AS INDICATED TO MATCH FINISH GRADES PER GRADING PLAN.
4. REFER TO PROJECT EARTHWORK SPECIFICATIONS AND GEOTECHNICAL REPORT FOR PREPARATION OF BUILDING AND PAVING SUBGRADES
5. REFER TO PROJECT SPECIFICATIONS FOR ALL MINIMUM AND ADDITIONAL REQUIREMENTS.
6. A GOOD GRASS COVER SHALL BE ESTABLISHED ON ALL DISTURBED AREAS.

KEY NOTES:

① PROP. 3" THICK ASPHALTIC CONCRETE; 8" ASPHALTIC BASE AND 8" STABILIZED SUBGRADE.

② ADA RAMP

③ PROP. 6" CONCRETE CURB, RE: DTL FBCED 06, SHT C8.0

④ PROP. 4" THICK CONC. SIDEWALK, RE: DTL FBCED 13, SHT C8.0.

⑤ PROP. CONC. WHEEL STOP AND/OR PROP. PRECAST CONC. WHEEL STOP, RE" DTL 3, SHT C8.1.

⑥ PROP. 4" WIDE WHITE TRAFFIC STRIPING. ALL CROSS HATCH AREA STRIPING TO BE SPACED 2" ON CENTER AT 45° DIAGONAL TO PERIMETER STRIPING AS INDICATED, RE: DTL 3, SHT C8.1.

⑦ PROP. SOLID SOD OVER 4" MIN. TOP SOIL ARE, RE: LANDSCAPE PLANS FOR TREES, SHRUBS, PLANTS AND IRRIGATION SYSTEMS.

⑧ PROP. ADA RESERVED PARKING SYMBOL PAVEMENT MARKING, RE: DTL 4, SHT C8.1.

⑨ PROP. ADA RESERVED PARKING SIGN & FOUNDATION, RE: DTL 5, SHT C8.1.

⑩ FULL DEPTH SAW CUT

⑪ BOLLARDS

⑫ TRASH DUMPSTER

⑬ MINIMUM 6" RCP; MATCH EXISTING FLOWLINES AS DIRECTED BY THE ENGINEER.

19251 Purus Dr.
Porter, TX 77365

WECS

TEXAS BOARD OF PROFESSIONAL ENGINEERS F–19379
4611 BIGGAM DRIVE
FRESNO, TEXAS 77545
(832) 443–4150

BATES ALLEN PARK
BLACK COWBOY MUSEUM
630 CHARLIE ROBERTS LANE

STATE OF TEXAS
GERALD PAUL WILSON
98053
LICENSED
PROFESSIONAL ENGINEER

Drawing Date: 06/03/2024
Drawn By: SMA
Checked By: DDV
Scale: 1" = 200'–0"

Revisions:

DESCRIPTION	
ISSUE FOR BID & CONSTRUCTION	09/23/2024

SITE PLAN

C3.0

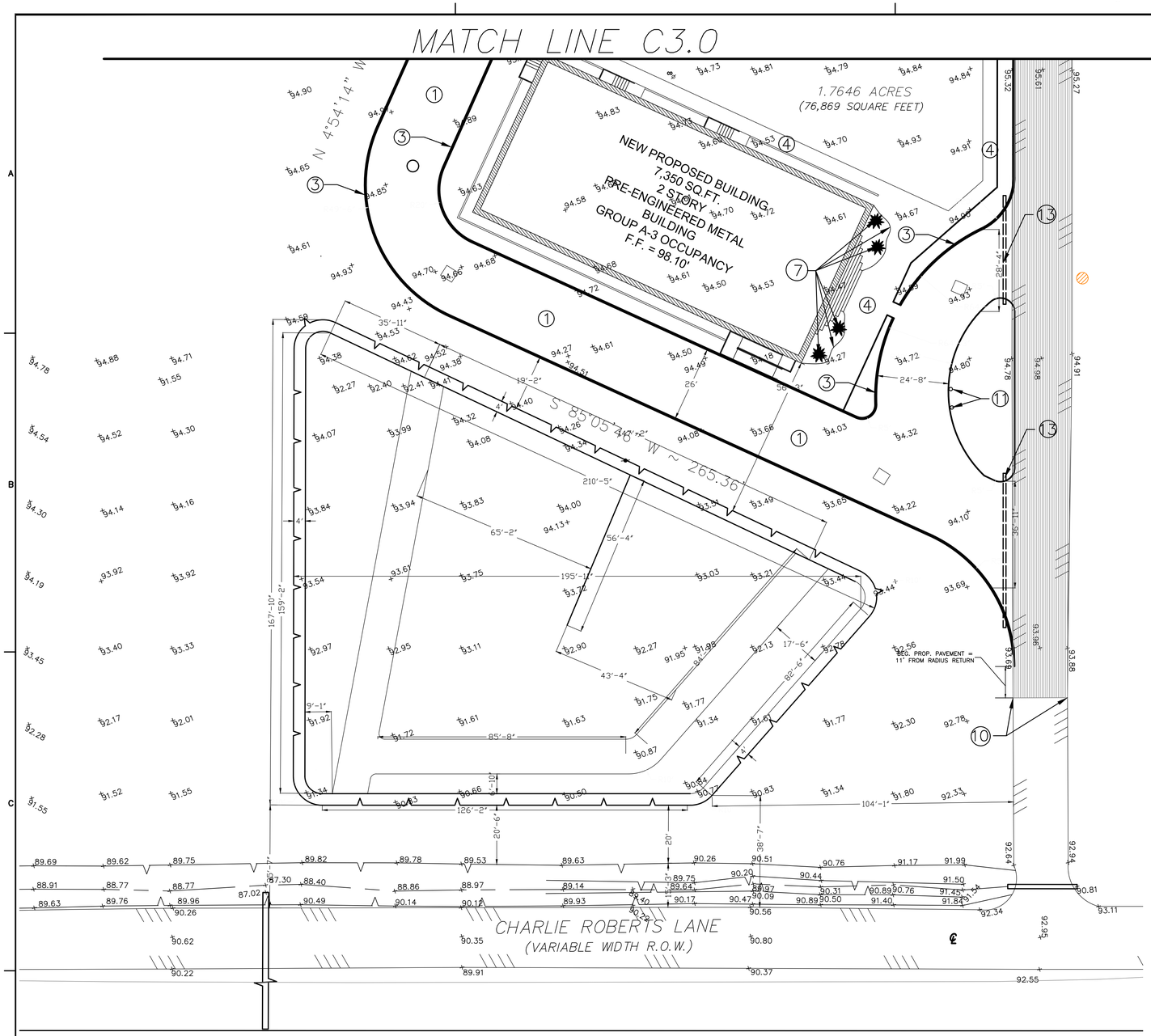

LEGEND:

- PROP. ASPHALT RECONSTRUCTION
- PROP. INLET
- PROP. STM SWR MANHOLE
- PROP. SAN SWR MANHOLE

GENERAL NOTES:

1. ALL DIMENSIONS AND COORDINATES ARE TO FACE OF CURB OR OUTSIDE OF BUILDING FACE UNLESS NOTED OTHERWISE.
2. REFER TO SHT C1.0 – TOPOGRAPHIC SURVEY PREPARED BY REKHA ENGINEERING, INC., DATED 03, 21, 2024 FOR EXISTING CONDITIONS, SURVEY BENCHMARKS, HORIZONTAL AND VERTICAL CONTROL.
3. ALL DISTURBED GRASS AND NON–PAVED AREAS NOT INDICATED FOR IMPROVEMENT BY LANDSCAPING PLANS ARE TO BE STABILIZED AND RESTORED WITH 4" MINIMUM TOPSOIL AND SODDING AS INDICATED TO MATCH FINISH GRADES PER GRADING PLAN.
4. REFER TO PROJECT EARTHWORK SPECIFICATIONS AND GEOTECHNICAL REPORT FOR PREPARATION OF BUILDING AND PAVING SUBGRADES
5. REFER TO PROJECT SPECIFICATIONS FOR ALL MINIMUM AND ADDITIONAL REQUIREMENTS.
6. A GOOD GRASS COVER SHALL BE ESTABLISHED ON ALL DISTURBED AREAS.
7. DETENTION POND IS TO HAVE A 2 FOOT CLAY LINER.

KEY NOTES:

① PROP. 3" THICK ASPHALTIC CONCRETE; 8" ASPHALTIC BASE AND 8" STABILIZED SUBGRADE.

② ADA RAMP

③ PROP. 6" CONCRETE CURB, RE: DTL FBCED 06, SHT C8.0

④ PROP. 4" THICK CONC. SIDEWALK, RE: DTL FBCED 13, SHT C8.0.

⑤ PROP. CONC. WHEEL STOP AND/OR PROP. PRECAST CONC. WHEEL STOP, RE" DTL 3, SHT C8.1.

⑥ PROP. 4" WIDE WHITE TRAFFIC STRIPING. ALL CROSS HATCH AREA STRIPING TO BE SPACED 2" ON CENTER AT 45° DIAGONAL TO PERIMETER STRIPING AS INDICATED, RE: DTL 3, SHT C8.1.

⑦ PROP. SOLID SOD OVER 4" MIN. TOP SOIL ARE, RE: LANDSCAPE PLANS FOR TREES, SHRUBS, PLANTS AND IRRIGATION SYSTEMS.

⑧ PROP. ADA RESERVED PARKING SYMBOL PAVEMENT MARKING, RE: DTL 4, SHT C8.1.

⑨ PROP. ADA RESERVED PARKING SIGN & FOUNDATION, RE: DTL 5, SHT C8.1.

⑩ FULL DEPTH SAW CUT

⑪ BOLLARDS

⑫ TRASH DUMPSTER

⑬ MINIMUM 6" RCP; MATCH EXISTING FLOWLINES

19251 Purus Dr.
Porter, TX 77365

WECS

TEXAS BOARD OF PROFESSIONAL ENGINEERS F–19379
4611 BIGGAM DRIVE
FRESNO, TEXAS 77545
(832) 443–4150

BATES ALLEN PARK
BLACK COWBOY MUSEUM
630 CHARLIE ROBERTS LANE

STATE OF TEXAS
GERALD PAUL WILSON
98053
LICENSED PROFESSIONAL ENGINEER

Drawing Date: 06/03/2024
Drawn By: SMA
Checked By: DDV
Scale: 1" = 200'–0"

Revisions:

DESCRIPTION	
ISSUE FOR BID & CONSTRUCTION	09/23/2024

SITE PLAN

C3.1

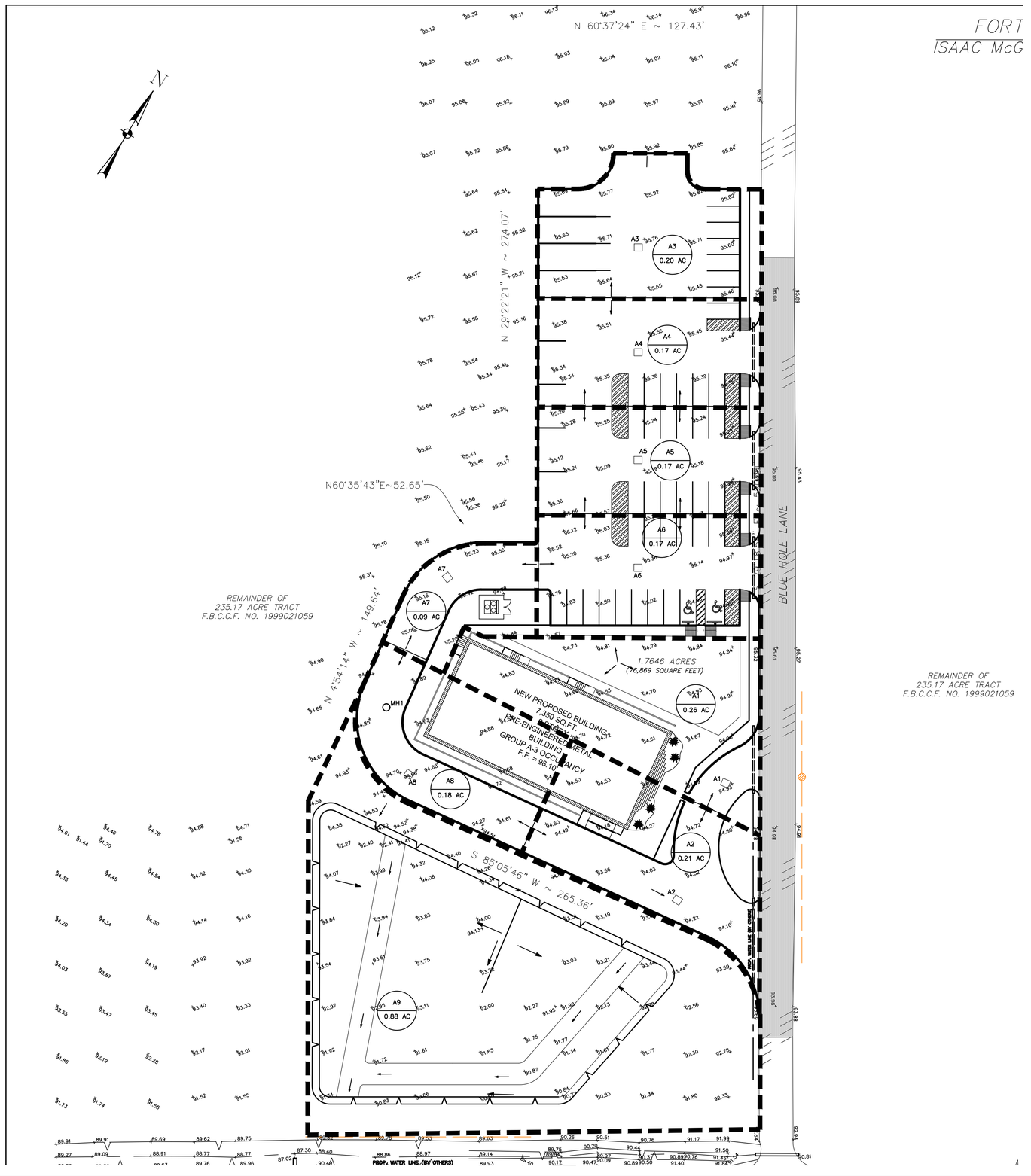

FORT
ISAAC McG

REMAINDER OF
235.17 ACRE TRACT
F.B.C.C.F. NO. 1999021059

LEGEND :

AC	ACRES
DA	DRAINAGE AREA
→	SHEET AND ROOF FLOW DIRECTIONS
60.86	EXISTING ELEVATIONS
	DRAINAGE AREA BOUNDARY
	PROP. STM SWR MANHOLE
	PROP. INLET
	PROP. ASPHALT RECONSTRUCTION
SUB-DRAINAGE DESIGNATON — A1 — 0.XX — DRAINAGE AREA (AC)	DRAINAGE AREA INFORMATION

19251 Purus Dr.
Porter, TX 77365

WECS

TEXAS BOARD OF PROFESSIONAL
ENGINEERS F-19379
4611 BIGGAM DRIVE
FRESNO, TEXAS 77545
(832) 443-4150

BATES ALLEN PARK
BLACK COWBOY MUSEUM
630 CHARLIE ROBERTS LANE

STATE OF TEXAS
GERALD PAUL WILSON
98053
LICENSED
PROFESSIONAL ENGINEER

Drawing Date: 06/03/2024
Drawn By: SMA
Checked By: DDV
Scale: 1" = 30'-0"

Revisions:

DESCRIPTION	
ISSUE FOR BID & CONSTRUCTION	09/23/2024

DRAINAGE AREA MAP

C4.0

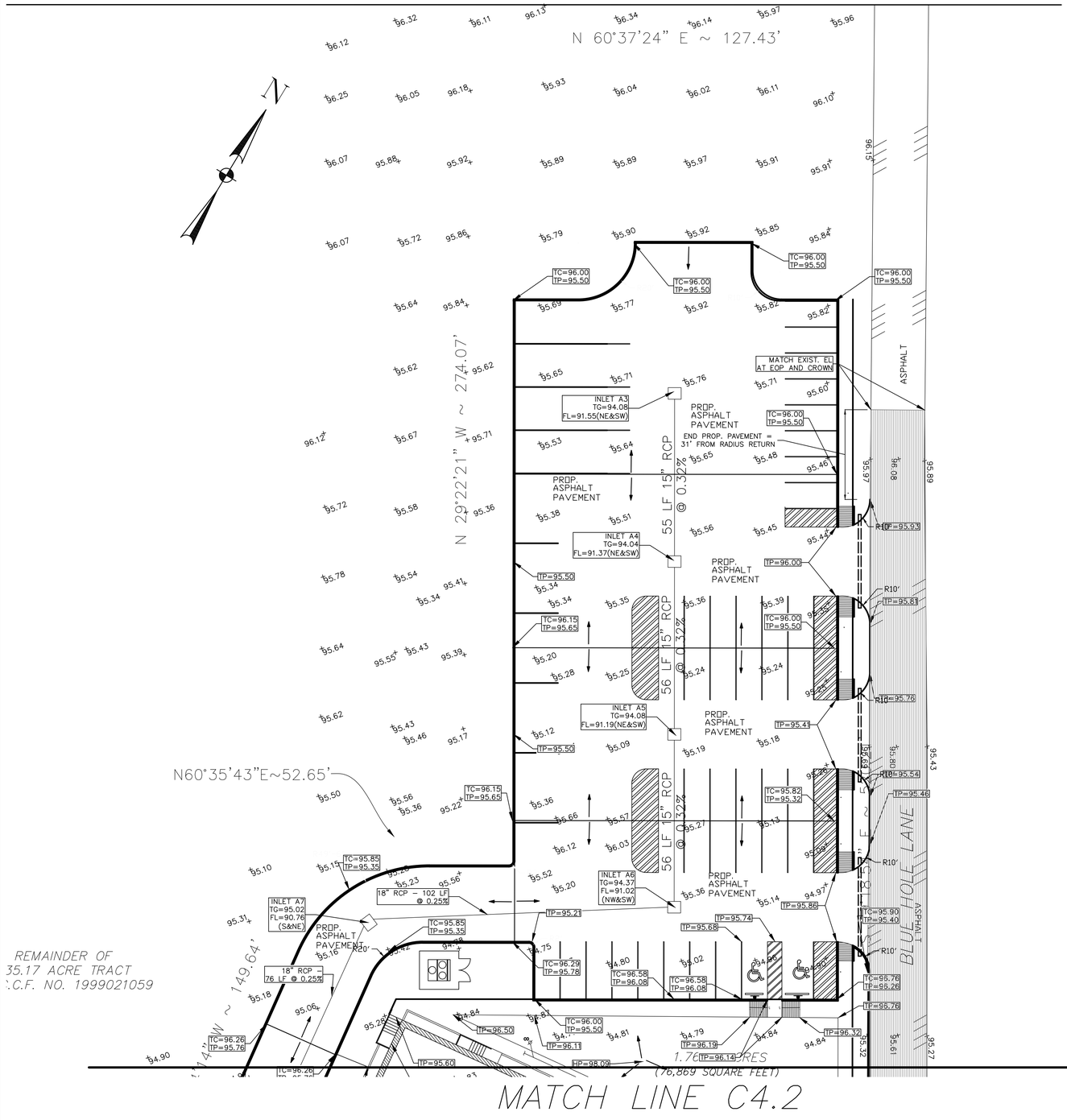

LEGEND :

MH	PROP. MANHOLE
TR	TOP OF RIM
FL	FLOW LINE
PROP.	PROPOSED
TG	TOP OF GRATE
TP	TOP OF PAVEMENT
TC	TOP OF CURB
TOB	TOP OF BANK
TOBM	TOP OF BERM
TOS	TOE OF SLOPE
	WATER METER
	PROP. INLET
	PROP. STM SWR MANHOLE
	PROP. SAN SWR MANHOLE
	PROP. SANITARY SEWER PIPE
	PROP. STORM SEWER PIPE
	WATER LINE
	SHEET FLOW
	PROP. ASPHALT RECONSTRUCTION

19251 Purus Dr.
Porter, TX 77365

WECS

TEXAS BOARD OF PROFESSIONAL ENGINEERS F-19379
4611 BIGGAM DRIVE
FRESNO, TEXAS 77545
(832) 443-4150

BATES ALLEN PARK
BLACK COWBOY MUSEUM
630 CHARLIE ROBERTS LANE

STATE OF TEXAS
GERALD PAUL WILSON
98053
LICENSED PROFESSIONAL ENGINEER

Drawing Date: 06/03/2024
Drawn By: SMA
Checked By: DDV
Scale: 1" = 200'-0"

Revisions:

DESCRIPTION	
ISSUE FOR BID & CONSTRUCTION	09/23/2024

DRAINAGE PLAN

C4.1

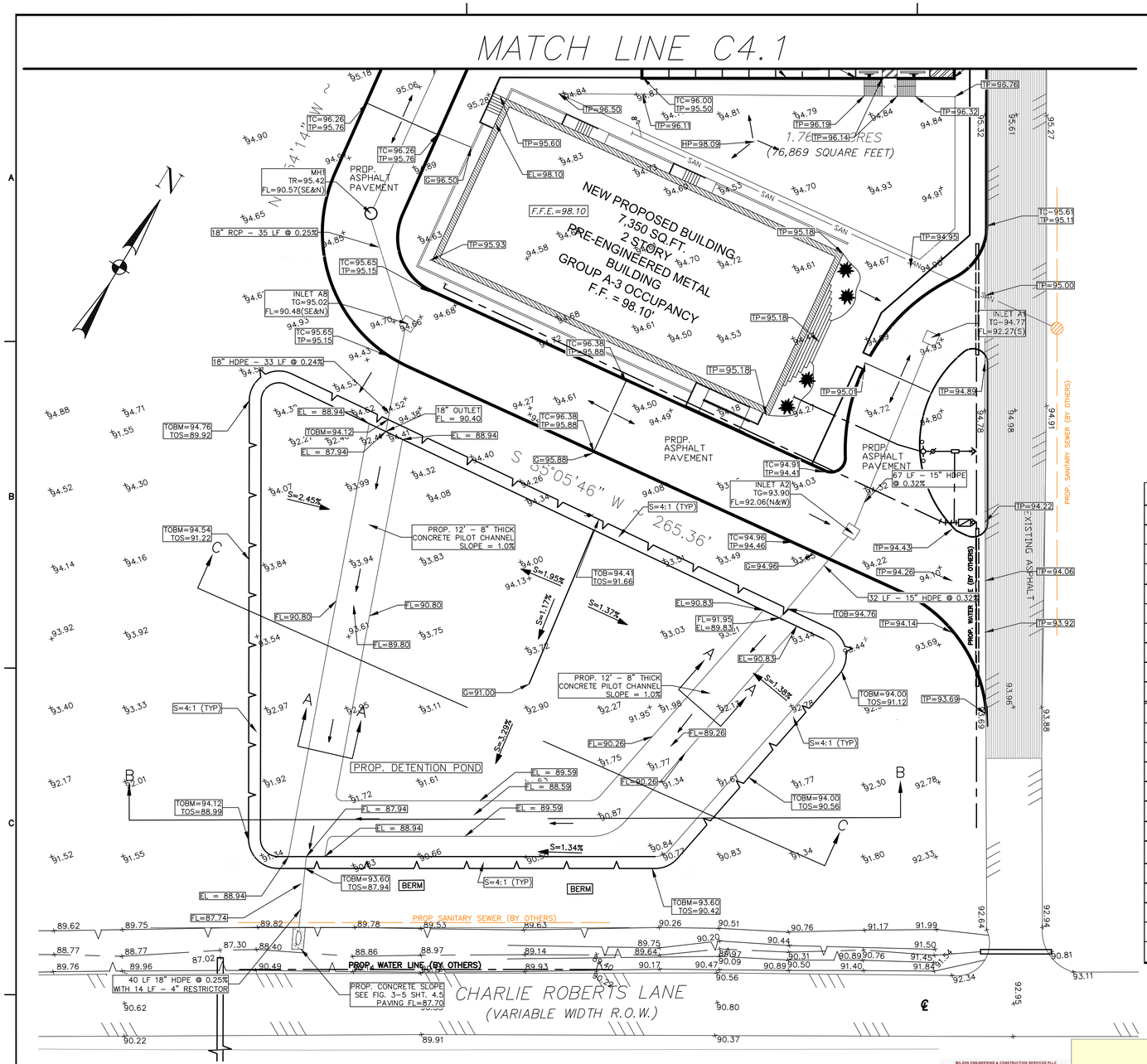

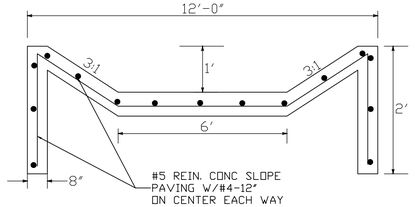

TYPICAL PILOT CHANNEL DETAIL 1
SECTION A–A
(NTS)

GENERAL NOTES:

1. REFER TO FBCED DTL 22, SHT C8.0 FOR INLET DETAILS.
2. REFER TO SHT C5.1 AND C5.2 – GRADING PLAN FOR ADDITIONAL DIMENSIONAL AND GRADING INFORMATION.
3. REFER TO SHT C4.0 – DRAINAGE AREA MAP FOR DRAINAGE DESIGN DATA.
4. REFER TO SHT C6.0 – UTILITY PLAN FOR WASTEWATER/SANITARY UTILITIES.

SITE RUNOFF CALCULATION
OUTFALL ORIFICE SIZE CALCULATION:

RESTRICTOR CALCULATION:

ALLOWABLE RELEASE RATE = 0.125 CFS/ACRE

Q = 0.125 CFS/ACRE * TOTAL CONTRIBUTING DRAINAGE AREA

Q = 0.125 CFS/ACRE * 2.33 ACRES

= 0.291 CFS

WSEL = 93.00

OUTFALL ELEVATION = 87.74

h = 93.00 – 87.74 = 5.26'

$D = Q^{0.5}(2.25)^{0.25}$

= 1.84"; THEREFORE USE A 4" DIAMETER RESTRICTOR PIPE

4" RESTRICTOR DISCHARGE CALCULATION:

Q = CA√2gh

WHERE

C = COEFFICIENT OF DISCHARGE = 0.60

A = CROSS SECTIONIAL AREA OF FLOW IN PIPE

= 0.0873 SF (FLOWING FULL)

g = 32.2 FT/S²

h = HEAD = (93.00+1) – 89.44 = 4.56 FT

Q = 0.60 x 0.09 x √(2 x 32.2 x 4.56)

= 0.819 CFS

LEGEND :

MH	PROP. MANHOLE
TR	TOP OF RIM
FL	FLOW LINE
PROP.	PROPOSED
TG	TOP OF GRATE
TP	TOP OF PAVEMENT
TC	TOP OF CURB
TOB	TOP OF BANK
TOBM	TOP OF BERM
	WATER METER
	PROP. INLET
	PROP. STM SWR MANHOLE
	PROP. SAN SWR MANHOLE
	PROP. SANITARY SEWER PIPE
	PROP. STORM SEWER PIPE
	WATER LINE
	SHEET FLOW
	PROP. ASPHALT RECONSTRUCTION
	PROP. BOLLARDS

DETENTION CALCULATIONS

TOTAL DEVELOPMENT AREA =	101,495 SF (2.33 ACRES)
DISTRIBUTED/IMPERVIOUS AREA -	
PARKING LOT	
DRIVEWAY/ACCESS LANES	
BUILDING	
SIDEWALK AND STAIRS	
DETENTION POND	
TOTAL IMPERVIOUS AREA	71,020 SF (1.63 ACRES)
DETENTION RATE REQUIRED =	0.86 AC-FT/AC
REQUIRED DETENTION = ((43,560*(TOTAL AREA * DET RATE))	
((43,560 * (2.33 * 0.86)) =	**87,285.53 CF (2.00 AC-FT)**
PROPOSED DETENTION -	
DETENTION POND CROSS-SECTION AVG. END AREA =	1,684.9 SF
DISTANCE BETWEEN THREE END AREAS =	84 LF
AVERAGE LENGTH OF DETENTION POND =	4.1 FT
TOTAL DETENTION POND VOLUME =	**91,200 CF (2.09 AC-FT)**

WILSON ENGINEERING & CONSTRUCTION SERVICES PLLC
WECS

BLACK COWBOY MUSEUM
DETENTION POND VOLUME PROVIDED

Measurements
Units (FT): FT
Distance between 84 FT

Provided Volume Results
VOL: 91,200 CU.FT.

Sec. 1	WSEL	Dist. (FT)	0	4	48	125	194	215	221
		Level (FT)	93	93	93	93	93	93	93
	PROP EL	Dist. (FT)	0	4	48	125	194	215	221
		Level (FT)	93	89.92	87.94	91.66	89.83	91.12	93
Sec. 2	WSEL	Dist. (FT)	0	4	38	103	156	179	184
		Level (FT)	93	93	93	93	93	93	93
	PROP EL	Dist. (FT)	0	4	38	103	156	179	184
		Level (FT)	93	91.22	89.8	91	89.26	90.56	93
Sec. 3	WSEL	Dist. (FT)	0	4	15	72	129	140	
		Level (FT)	93	93	93	93	93	93	
	PROP EL	Dist. (FT)	0	4	21	73	136	140	
		Level (FT)	93	88.99	87.94	88.66	90.42	93.06	

X-SEC AREA: 645.9 SQ.FT.

X-SEC AREA: 486.5 SQ.FT.

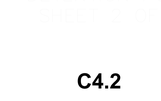

X-SEC AREA: 552.5 SQ.FT.

19251 Purus Dr.
Porter, TX 77365

WECS
TEXAS BOARD OF PROFESSIONAL ENGINEERS F-19379
4611 BIGGAM DRIVE
FRESNO, TEXAS 77545
(832) 443-4150

BATES ALLEN PARK
BLACK COWBOY MUSEUM
630 CHARLIE ROBERTS LANE

STATE OF TEXAS
GERALD PAUL WILSON
98053
LICENSED PROFESSIONAL ENGINEER

Drawing Date: 06/03/2024
Drawn By: SMA
Checked By: DDV
Scale: 1" = 200'-0"

Revisions:

DESCRIPTION	
ISSUE FOR BID & CONSTRUCTION	09/23/2024

DRAINAGE PLAN

C4.2

HGL Starting Elevation= 91.90
Design Storm= 3-year
b= 48.73
d= 8.37
E= 0.7033

MH From	MH To	Area (Acres)	Runoff Coefficient C	Sum of C*A	Intensity I (in/hr)	Sums of Flows (cfs)	Time of Conc (Min)	Reach Length (feet)	Diam. or Rise (in)	Span (ft)	Slope %	Manning's "n"	Design Capacity (cfs)	Design Velocity V (ft/s)	Fall (feet)	Manhole Deep (feet)	Flowline Elevation Upstream (feet)	Flowline Elevation Downstream (feet)	Actual Velocity V (ft/s)	Hydraulic Gradient %	Change in Head (feet)	Elevation of Hyd Grad Upstream (feet)	Elevation of Hyd Grad Downstream (feet)	Natural Ground Upstream (feet)	Natural Ground Downstream (feet)
A1	A2	0.3	0.85	0.26	5.56	1.42	13.52	67	15	67	0.32	0.011	4.33	3.53	0.21	2.66	92.27	92.06	1.16	0.35	0.24	92.35	92.12	94.93	94.22
A2	POND	0.23	0.85	0.45	5.56	2.51	13.52	32	15	32	0.32	0.011	4.33	3.53	0.10	2.26	92.06	91.95	2.04	0.52	0.17	92.12	91.95	94.32	94.22
A3	A4	0.19	0.85	0.16	5.56	0.90	13.52	55	15	55	0.32	0.011	4.33	3.53	0.18	4.21	91.55	91.37	0.73	0.34	0.18	93.59	93.41	95.76	95.56
A4	A5	0.17	0.85	0.31	5.56	1.70	13.52	56	15	56	0.32	0.011	4.33	3.53	0.18	3.99	91.37	91.19	1.39	0.37	0.21	93.41	93.20	95.36	95.19
A5	A6	0.17	0.85	0.45	5.56	2.51	13.52	56	15	56	0.32	0.011	4.33	3.53	0.18	4.00	91.19	91.02	2.04	0.44	0.24	93.20	92.96	95.19	95.36
A6	A7	0.17	0.85	0.60	5.56	3.31	13.52	102	18	102	0.25	0.011	6.22	3.52	0.25	4.59	90.77	90.51	1.87	0.30	0.31	92.96	92.65	95.36	95.42
A7	MH1			0.60	5.56	3.31		76	18	76	0.25	0.011	6.22	3.52	0.19	4.91	90.51	90.32	1.87	0.32	0.24	92.65	92.40	95.42	94.85
MH1	A8	0.18	0.85	0.75	5.56	4.16	13.52	35	18	35	0.25	0.011	6.22	3.52	0.09	4.53	90.32	90.23	2.36	0.50	0.17	92.40	92.23	94.85	94.66
A8	POND	0.62	0.85	1.28	5.56	7.09	13.52	33	18	33	0.24	0.011	6.09	3.45	0.08	4.43	90.23	90.15	4.01	1.00	0.33	92.23	91.90	94.66	94.41
POND	OUTFALL			1.28	5.56	9.60		23	18	23	0.25	0.011	6.22	3.52	0.06	3.35	87.74	87.68	5.43	2.24	0.52	88.46	87.94	91.09	87.70

HGL Starting Elevation= 91.90
Design Storm= 100-year
b= 42.99
d= 1.08
E= 0.5274

MH From	MH To	Area (Acres)	Runoff Coefficient C	Sum of C*A	Intensity I (in/hr)	Sums of Flows (cfs)	Time of Conc (Min)	Reach Length (feet)	Diam. or Rise (in)	Span (ft)	Slope %	Manning's "n"	Design Capacity (cfs)	Design Velocity V (ft/s)	Fall (feet)	Manhole Deep (feet)	Flowline Elevation Upstream (feet)	Flowline Elevation Downstream (feet)	Actual Velocity V (ft/s)	Hydraulic Gradient %	Change in Head (feet)	Elevation of Hyd Grad Upstream (feet)	Elevation of Hyd Grad Downstream (feet)	Natural Ground Upstream (feet)	Natural Ground Downstream (feet)
A1	A2	0.3	0.85	0.26	10.45	2.67	13.52	67	15	67	0.32	0.011	4.33	3.53	0.21	2.66	92.27	92.06	2.17	0.43	0.29	92.57	92.28	94.93	94.22
A2	POND	0.23	0.85	0.45	10.45	4.71	13.52	32	15	32	0.32	0.011	4.33	3.53	0.10	2.26	92.06	91.95	3.84	1.04	0.33	92.28	91.95	94.32	94.22
A3	A4	0.19	0.85	0.16	10.45	1.69	13.52	55	15	55	0.32	0.011	4.33	3.53	0.18	4.21	91.55	91.37	1.38	0.37	0.21	94.98	94.78	95.76	95.56
A4	A5	0.17	0.85	0.31	10.45	3.20	13.52	56	15	56	0.32	0.011	4.33	3.53	0.18	3.99	91.37	91.19	2.61	0.51	0.28	94.78	94.49	95.36	95.19
A5	A6	0.17	0.85	0.45	10.45	4.71	13.52	56	15	56	0.32	0.011	4.33	3.53	0.18	4.00	91.19	91.02	3.84	0.73	0.41	94.49	94.09	95.19	95.36
A6	A7	0.17	0.85	0.60	10.45	6.22	13.52	102	18	102	0.25	0.011	6.22	3.52	0.25	4.59	90.77	90.51	3.52	0.44	0.45	94.09	93.64	95.36	95.42
A7	MH1			0.60	10.45	6.22		76	18	76	0.25	0.011	6.22	3.52	0.19	4.91	90.51	90.32	3.52	0.50	0.38	93.64	93.26	95.42	94.85
MH1	A8	0.18	0.85	0.75	10.45	7.82	13.52	35	18	35	0.25	0.011	6.22	3.52	0.09	4.53	90.32	90.23	4.43	1.12	0.39	93.26	92.86	94.85	94.66
A8	POND	0.62	0.85	1.28	10.45	13.33	13.52	33	18	33	0.24	0.011	6.09	3.45	0.08	4.43	90.23	90.15	7.55	2.92	0.96	92.86	91.90	94.66	94.41
POND	OUTFALL			1.28	10.45	18.04		23	18	23	0.25	0.011	6.22	3.52	0.06	3.35	87.74	87.68	10.21	7.29	1.68	89.62	87.94	91.09	87.70

19251 Purus Dr.
Porter, TX 77365

WECS

TEXAS BOARD OF PROFESSIONAL ENGINEERS F-19379
4611 BIGGAM DRIVE
FRESNO, TEXAS 77545
(832) 443-4150

BATES ALLEN PARK
BLACK COWBOY MUSEUM
630 CHARLIE ROBERTS LANE

STATE OF TEXAS
GERALD PAUL WILSON
98053
LICENSED
PROFESSIONAL ENGINEER

Drawing Date: 06/03/2024
Drawn By: SMA
Checked By: DDV
Scale:

Revisions:

DESCRIPTION	
ISSUE FOR BID & CONSTRUCTION	09/23/2024

DRAINAGE CALCULATIONS

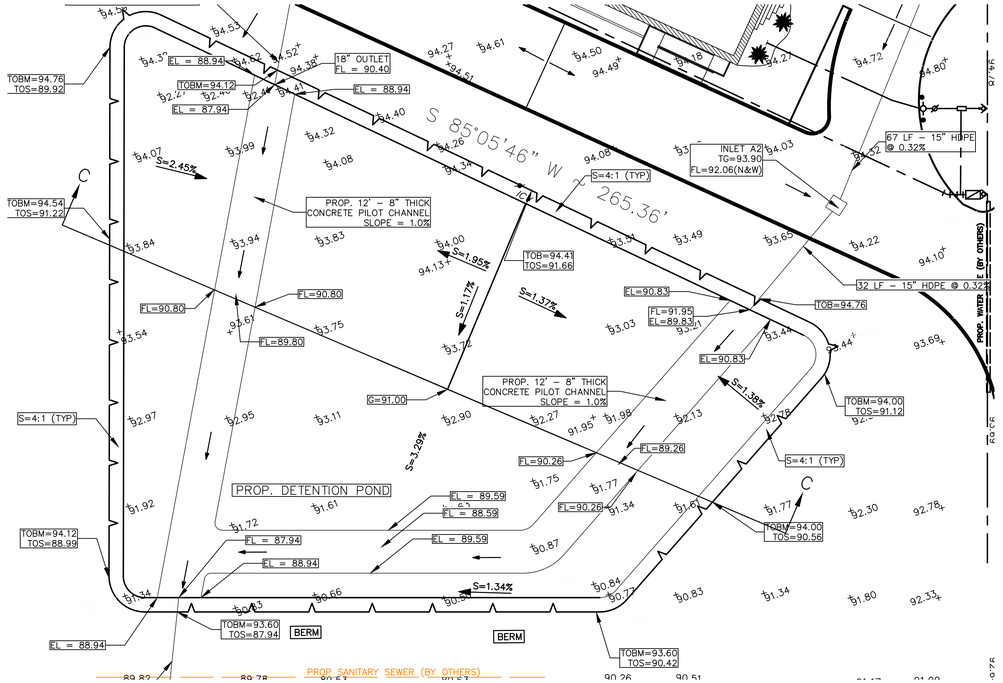

SECTION C–C

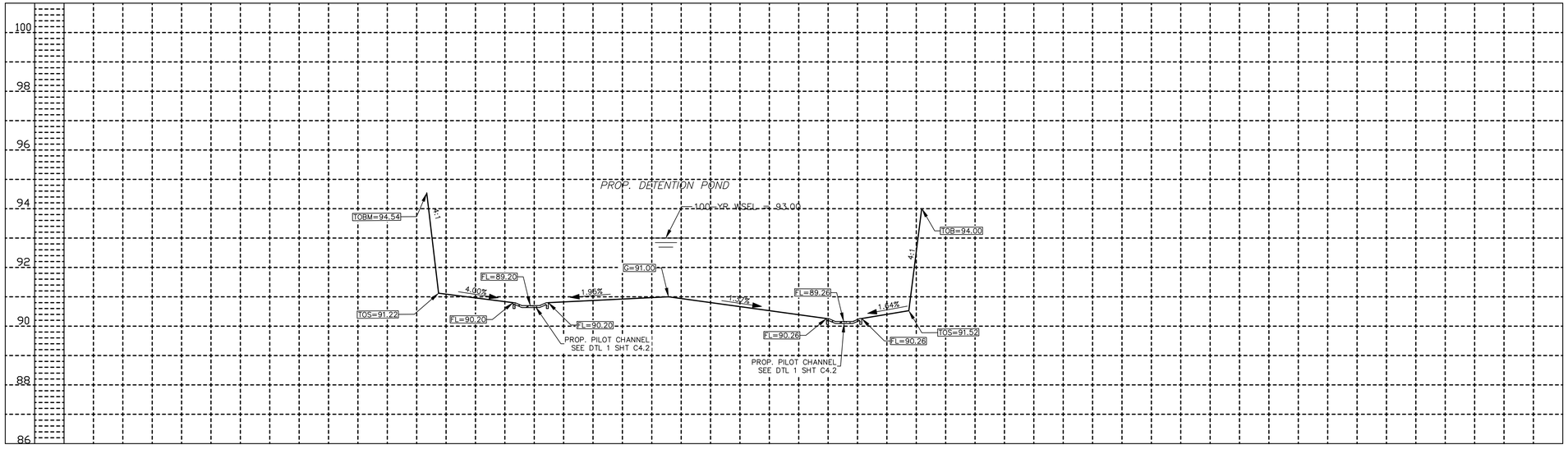

LEGEND :

MH	PROP. MANHOLE
TR	TOP OF RIM
FL	FLOW LINE
PROP.	PROPOSED
TG	TOP OF GRATE
TP	TOP OF PAVEMENT
TC	TOP OF CURB
TOB	TOP OF BANK
TOBM	TOP OF BERM
TOS	TOE OF SLOPE
	WATER METER
	PROP. INLET
	PROP. STM SWR MANHOLE
	PROP. SAN SWR MANHOLE
	PROP. SANITARY SEWER PIPE
	PROP. STORM SEWER PIPE
	WATER LINE
	SHEET FLOW
	PROP. ASPHALT RECONSTRUCTION

19251 Purus Dr.
Porter, TX 77365

WECS

TEXAS BOARD OF PROFESSIONAL
ENGINEERS F-19379
4611 BIGGAM DRIVE
FRESNO, TEXAS 77545
(832) 443-4150

BATES ALLEN PARK
BLACK COWBOY MUSEUM
630 CHARLIE ROBERTS LANE

STATE OF TEXAS
GERALD PAUL WILSON
98053
LICENSED
PROFESSIONAL ENGINEER

Drawing Date: 06/03/2024
Drawn By: SMA
Checked By: DDV
Scale:

Revisions:

DESCRIPTION	
ISSUE FOR BID & CONSTRUCTION	09/23/2024

DETENTION POND PLAN & PROFILE

C4.4

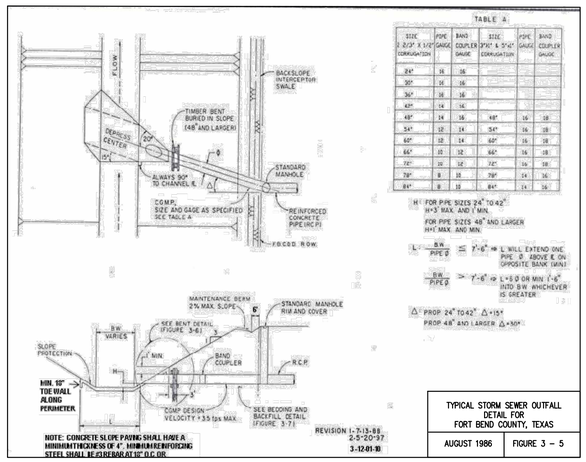

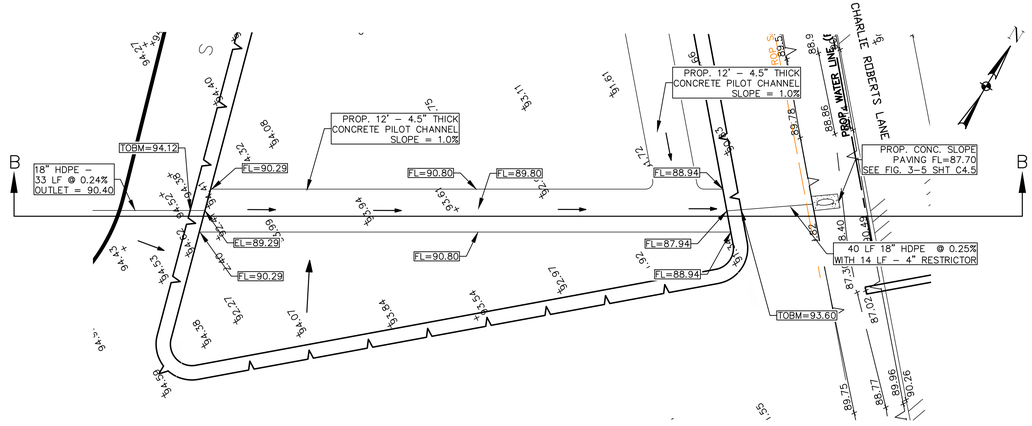

SECTION B–B

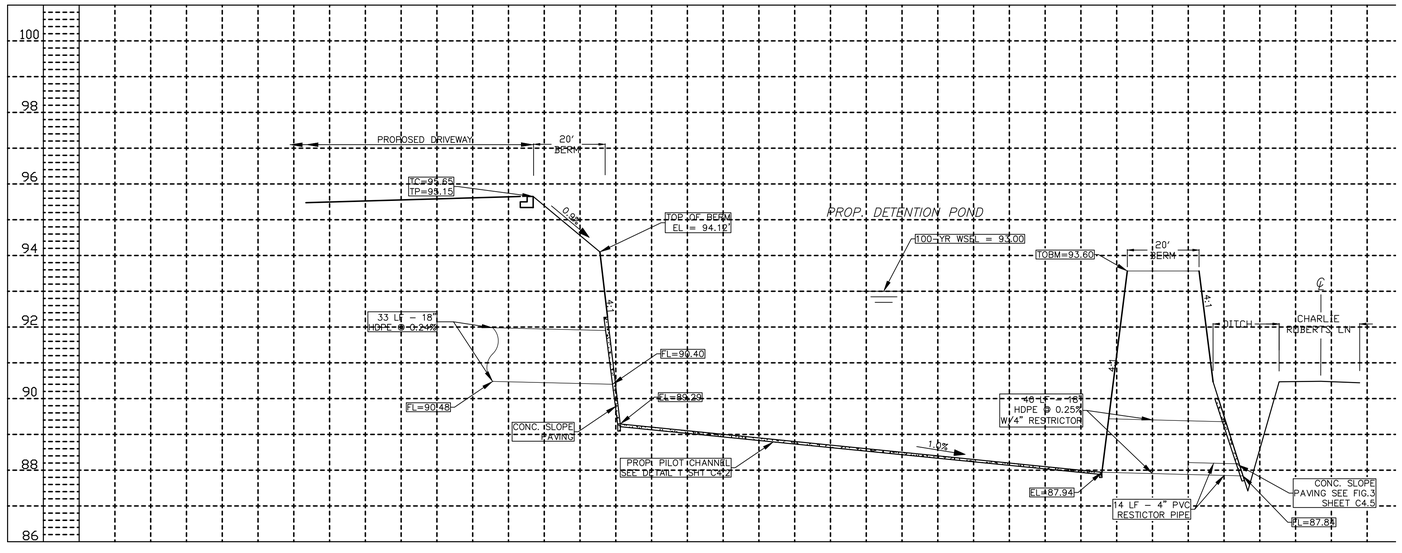

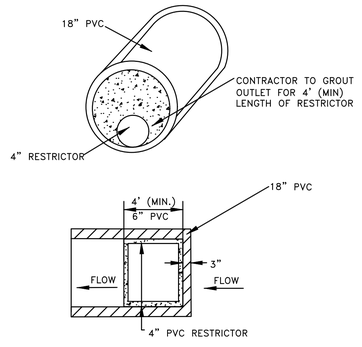

RESTRICTOR PIPE DETAIL
N.T.S.

LEGEND :

MH	PROP. MANHOLE
TR	TOP OF RIM
FL	FLOW LINE
PROP.	PROPOSED
TG	TOP OF GRATE
TP	TOP OF PAVEMENT
TC	TOP OF CURB
TOB	TOP OF BANK
TOBM	TOP OF BERM
TOS	TOE OF SLOPE
	WATER METER
	PROP. INLET
	PROP. STM SWR MANHOLE
	PROP. SAN SWR MANHOLE
	PROP. SANITARY SEWER PIPE
	PROP. STORM SEWER PIPE
	WATER LINE
	SHEET FLOW
	PROP. ASPHALT RECONSTRUCTION

19251 Purus Dr.
Porter, TX 77365

WECS
TEXAS BOARD OF PROFESSIONAL ENGINEERS F–19379
4611 BIGGAM DRIVE
FRESNO, TEXAS 77545
(832) 443–4150

BATES ALLEN PARK
BLACK COWBOY MUSEUM
630 CHARLIE ROBERTS LANE

STATE OF TEXAS
GERALD PAUL WILSON
98053
LICENSED
PROFESSIONAL ENGINEER

Drawing Date: 06/03/2024
Drawn By: SMA
Checked By: DDV
Scale:

Revisions:

DESCRIPTION	
ISSUE FOR BID & CONSTRUCTION	09/23/2024

DETENTION POND PLAN & PROFILE

C4.5

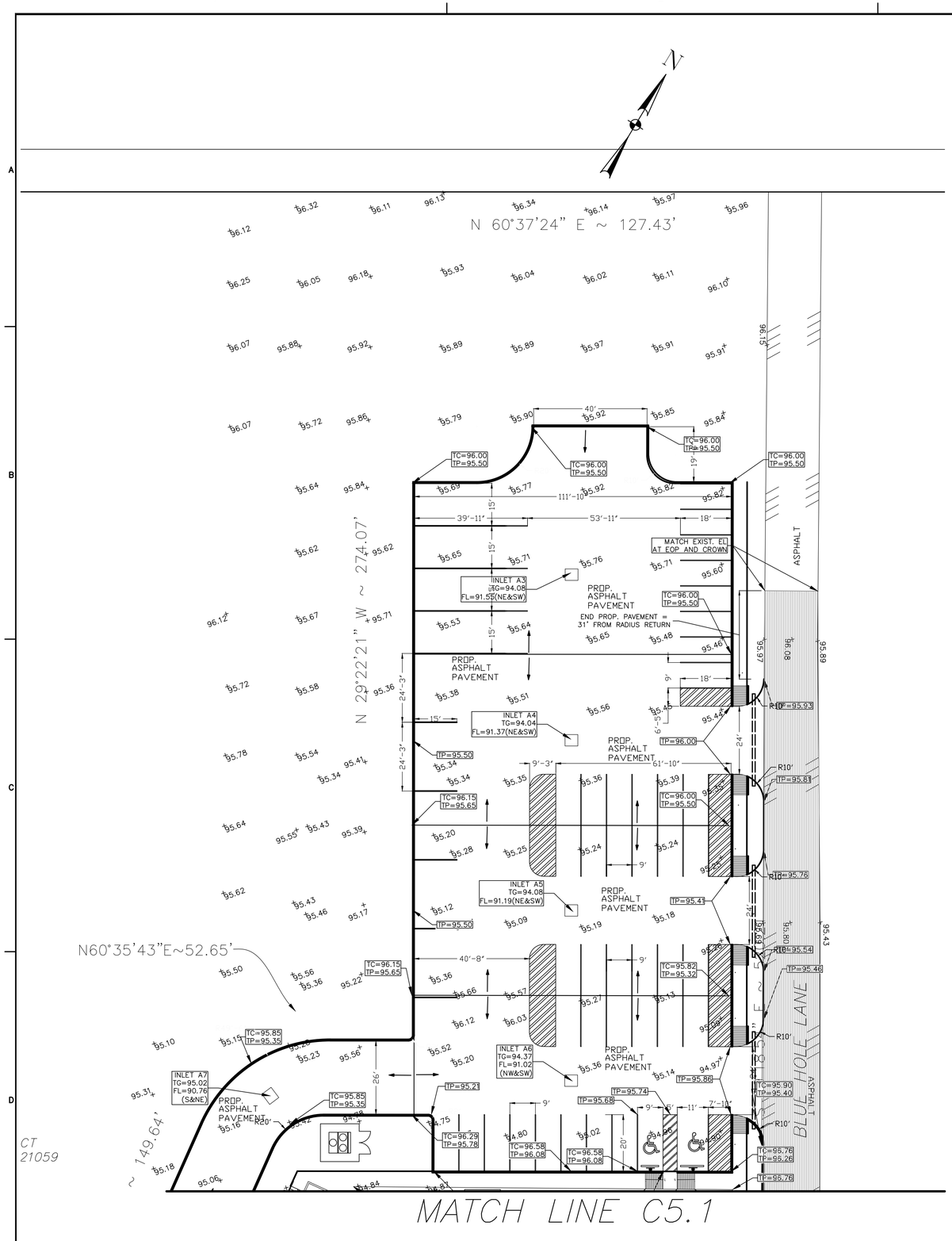

LEGEND :

MH	PROP. MANHOLE
TR	TOP OF RIM
FL	FLOW LINE
PROP.	PROPOSED
TG	TOP OF GRATE
TP	TOP OF PAVEMENT
TC	TOP OF CURB
	WATER METER
	PROP. INLET
	PROP. SANITARY SEWER PIPE
	PROP. STORM SEWER PIPE
	WATER LINE
	SHEET FLOW
	PROP. ASPHALT RECONSTRUCTION SEE DETAIL 3 FOR ROADWAY SECTION

GENERAL NOTES:

1. ALL DIMENSIONS AND COORDINATES ARE TO FACE OF CURB OR OUTSIDE OF BUILDING FACE UNLESS NOTED OTHERWISE.
2. ALL CURBS ARE 6" CURBS UNLESS NOTED OTHERWISE.
3. REFER TO SHT. C8.0; FBCED DTL 6 FOR CURB DETAILS 6.
4. REFER TO SHT. C8.0; FBCED DTL 13 FOR SIDEWALK DETAILS.
5. A GOOD GRASS COVER SHALL BE ESTABLISHED ON ALL DISTURBED AREAS.
6. ASPHALT ROADWAY IS TO BE RECONSTRUCTED AND SHALL MATCH EXISTING ELEVATIONS.
7. CONTRACTOR TO FOLLOW PAVEMENT SECTION DETAIL 3 FOR PROPOSED ROADWAY.
8. ASPHALT ROADWAY IS TO HAVE A $\frac{1}{4}$"/FT CROWN.

19251 Purus Dr.
Porter, TX 77365

WECS

TEXAS BOARD OF PROFESSIONAL ENGINEERS F-19379
4611 BIGGAM DRIVE
FRESNO, TEXAS 77545
(832) 443-4150

BATES ALLEN PARK
BLACK COWBOY MUSEUM
630 CHARLIE ROBERTS LANE

STATE OF TEXAS
GERALD PAUL WILSON
98053
LICENSED PROFESSIONAL ENGINEER

Drawing Date: 06/03/2024
Drawn By: SMA
Checked By: DDV
Scale: 1" = 200'-0"

Revisions:

DESCRIPTION	
ISSUE FOR BID & CONSTRUCTION	09/23/2024

PAVING AND GRADING

LEGEND :

MH	PROP. MANHOLE
TR	TOP OF RIM
FL	FLOW LINE
PROP.	PROPOSED
TG	TOP OF GRADE
TP	TOP OF PAVEMENT
TC	TOP OF CURB
TOBM	TOP OF BERM
EOP	EDGE OF PAVEMENT
EL	PROP. ELEVATIION
	WATER METER
	PROP. INLET
	PROP. SANITARY SEWER PIPE
	PROP. STORM SEWER PIPE
	WATER LINE
	SHEET FLOW
	PROP. ASPHALT RECONSTRUCTION
	PROP. BOLLARDS
	PROP. SAN SWR MANHOLE

MATCH LINE C5.0

N

1.76 ACRES (76,869 SQUARE FEET)

NEW PROPOSED BUILDING
7,350 SQ.FT.
2 STORY
PRE-ENGINEERED METAL BUILDING
GROUP A-3 OCCUPANCY
F.F. = 98.10'

F.F.E.=98.10

PROP. ASPHALT PAVEMENT

PROP. ASPHALT PAVEMENT

PROP. ASPHALT PAVEMENT

MH1
TR=95.42
FL=90.57(SE&N)

INLET A8
TG=95.02
FL=90.48(SE&N)

INLET A2
TG=93.90
FL=92.06(N&W)

INLET A1
TG=94.77
FL=92.27(S)

18" OUTLET
FL = 90.40

PROP. 12' - 8" THICK CONCRETE PILOT CHANNEL SLOPE = 1.0%

PROP. 12' - 8" THICK CONCRETE PILOT CHANNEL SLOPE = 1.0%

PROP. DETENTION POND

S 05°05'48" W ~ 265.36'

S=2.45%
S=1.95%
S=1.17%
S=1.37%
S=3.29%
S=1.38%
S=1.34%
S=4:1 (TYP)

BERM
BERM

PROP. SANITARY SEWER (BY OTHERS)

PROP. WATER LINE (BY OTHERS)

PROP. SANITARY SEWER (BY OTHERS)

EXISTING ASPHALT

40 LF 18" HDPE @ 0.25% WITH 14 LF - 4" RESTRICTOR

PROP. CONCRETE SLOPE SEE FIG. 3-5 SHT. 4.5 PAVING FL=87.70

CHARLIE ROBERTS LANE
(VARIABLE WIDTH R.O.W.)

BEG. PROP. PAVEMENT = 11' FROM RADIUS RETURN

MATCH EXIST. CROWN AND EOP EL AT BEG. OF PROP. PAVEMENT

GENERAL NOTES:

1. ALL DIMENSIONS AND COORDINATES ARE TO FACE OF CURB OR OUTSIDE OF BUILDING FACE UNLESS NOTED OTHERWISE.
2. ALL CURBS ARE 6" CURBS UNLESS NOTED OTHERWISE.
3. REFER TO SHT. C8.0; FBCED DTL 6 FOR CURB DETAILS 6.
4. REFER TO SHT. C8.0; FBCED DTL 13 FOR SIDEWALK DETAILS.
5. A GOOD GRASS COVER SHALL BE ESTABLISHED ON ALL DISTURBED AREAS.
6. ASPHALT ROADWAY IS TO BE RECONSTRUCTED AND SHALL MATCH EXISTING ELEVATIONS.
7. CONTRACTOR TO FOLLOW PAVEMENT SECTION DETAIL 3 FOR PROPOSED ROADWAY.
8. ASPHALT ROADWAY IS TO HAVE A $\frac{1}{4}$"/FT CROWN.

19251 Purus Dr.
Porter, TX 77365

WECS

TEXAS BOARD OF PROFESSIONAL ENGINEERS F-19379
4611 BIGGAM DRIVE
FRESNO, TEXAS 77545
(832) 443-4150

BATES ALLEN PARK
BLACK COWBOY MUSEUM
630 CHARLIE ROBERTS LANE

STATE OF TEXAS
GERALD PAUL WILSON
98053
LICENSED
PROFESSIONAL ENGINEER

Drawing Date: 06/03/2024
Drawn By: SMA
Checked By: DDV
Scale: 1" = 200'-0"

Revisions:

DESCRIPTION	
ISSUE FOR BID & CONSTRUCTION	09/23/2024

PAVING AND GRADING

C5.1

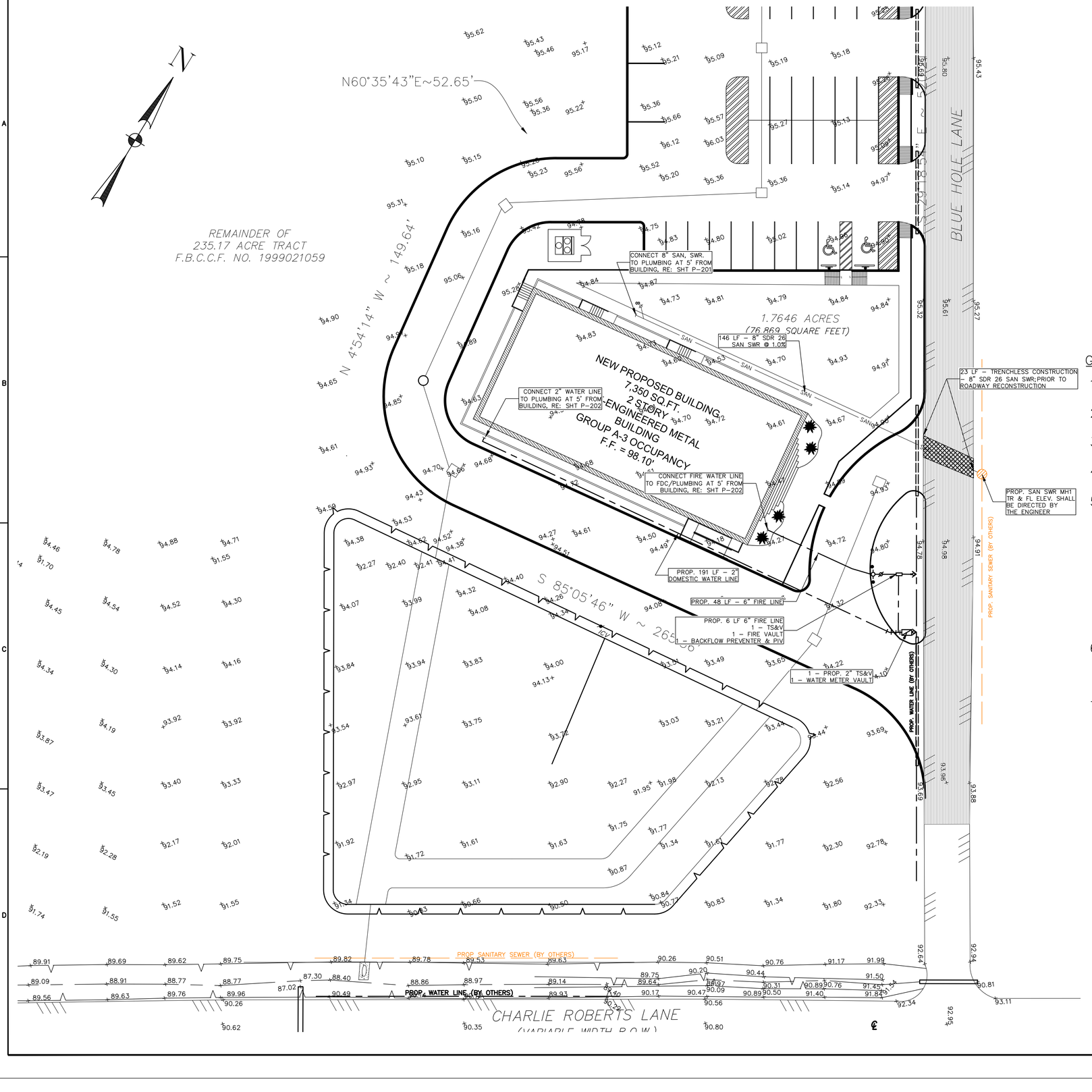

LEGEND:

- WATER LINE (TAPPING SLEEVE & VALVE)
- SAN — PROP. SANITARY SEWER LINE
- PROP. STORM SEWER
- CO — PROP. STORM SEWER CLEAN OUT
- TRENCHLESS CONSTRUCTION
- PROP. BOLLARDS
- WATER METER
- PROP. INLET
- PROP. STM SWR MANHOLE
- PROP. SAN SWR MANHOLE
- WATER LINE

GENERAL NOTES:

1. ALL SANITARY SEWER PIPE AND FITTINGS SHALL BE SDR 26 PVC.
2. EXIST. SANITARY SEWER AND WATERLINE DEPTHS, FLOWLINE ELEVATIONS ARE TO BE FIELD VERIFIED.
3. REFER TO GRADING PLAN FOR PROP. GRADING & DRAINAGE IMPROVEMENTS.
4. REFER TO DTL X; SHEET X.04 FOR REDUCED PRESSURE BACKFLOW – PREVENTER (RPBP).
5. UTILITY LOCATION IS APPROXIMATE. UTILITIES PRESENTED ON THESE DRAWINGS ARE SHOWN BASED ON THE BEST AVAILABLE INFORMATION. CONTRACTORS SHALL VERIFY THE EXACT LOCATION IN THE FIELD BEFORE COMMENCING CONSTRUCTION. CONTRACTOR SHALL NOTIFY TEXAS ONE CALL AT 713.223.4567/800.245.4545 AND LONE STAR ONE CALL AT 800.669.8344 AT LEAST 48 HOURS BEFORE PROCEEDING WITH ANY EXCAVATION.
6. THE EXISTING WATER LINE AND SANITARY SEWER LINE DEPTHS ARE APPROXIMATE THE CONTRACTOR SHALL VERIFY DEPTHS BEFORE THE START OF CONSTRUCTION.
7. OPEN CUT EXIST. ASPHALT ROADWAY TO INSTALL 8" SANITARY SEWER LINE PRIOR TO ROADWAY RECONSTRUCTION.

19251 Purus Dr.
Porter, TX 77365

WECS
TEXAS BOARD OF PROFESSIONAL ENGINEERS F-19379
4611 BIGGAM DRIVE
FRESNO, TEXAS 77545
(832) 443-4150

BATES ALLEN PARK
BLACK COWBOY MUSEUM
630 CHARLIE ROBERTS LANE

STATE OF TEXAS
GERALD PAUL WILSON
98053
LICENSED PROFESSIONAL ENGINEER

Drawing Date: 06/03/2024
Drawn By: SMA
Checked By: DDV
Scale: 1" = 200'-0"

Revisions:

DESCRIPTION	
ISSUE FOR BID & CONSTRUCTION	09/23/2024

UTILITY PLAN

C6.0

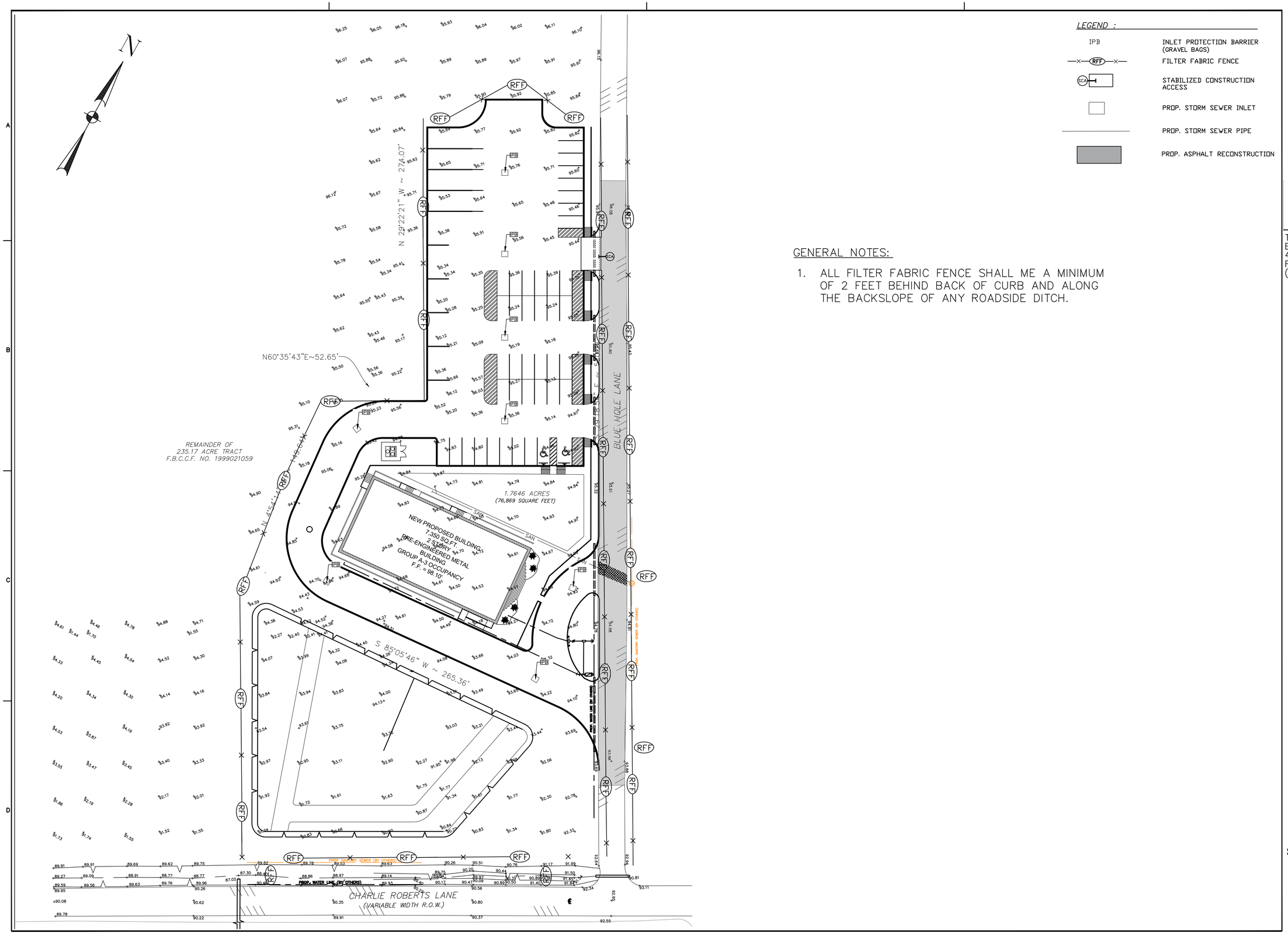

LEGEND :

IPB	INLET PROTECTION BARRIER (GRAVEL BAGS)
RFF	FILTER FABRIC FENCE
SCA	STABILIZED CONSTRUCTION ACCESS
	PROP. STORM SEWER INLET
	PROP. STORM SEWER PIPE
	PROP. ASPHALT RECONSTRUCTION

GENERAL NOTES:

1. ALL FILTER FABRIC FENCE SHALL ME A MINIMUM OF 2 FEET BEHIND BACK OF CURB AND ALONG THE BACKSLOPE OF ANY ROADSIDE DITCH.

19251 Purus Dr.
Porter, TX 77365

WECS

TEXAS BOARD OF PROFESSIONAL ENGINEERS F-19379
4611 BIGGAM DRIVE
FRESNO, TEXAS 77545
(832) 443-4150

BATES ALLEN PARK
BLACK COWBOY MUSEUM
630 CHARLIE ROBERTS LANE

STATE OF TEXAS
GERALD PAUL WILSON
98053
LICENSED
PROFESSIONAL ENGINEER

Drawing Date: 06/03/2024
Drawn By: SMA
Checked By: DDV
Scale: 1" = 30'-0"

Revisions:

DESCRIPTION	
ISSUE FOR BID & CONSTRUCTION	09/23/2024

STORM WATER POLLUTION PREVENTION PLAN

C7.0

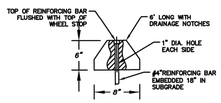

WHEEL STOP – DETAIL 1
SCALE: NTS

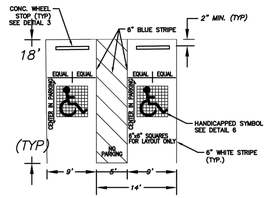

HANDICAPPED STRIPING – DETAIL 2
SCALE: NTS

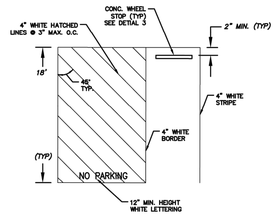

HATCHED AREA ADJACENT TO STALL – DETAIL 3
SCALE: NTS

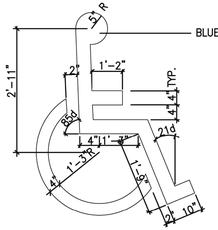

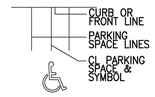

TYP. LOCATION PLAN

NOTE:
1. SEE SITE PLAN FOR LOCATIONS.
2. ADA STANDARDS FOR ACCESSIBLE DESIGN DIMENSION GOVERN.

ADA RESERVED PARKING SYMBOL PAVEMENT MARKING – DETAIL 4
SCALE: NTS

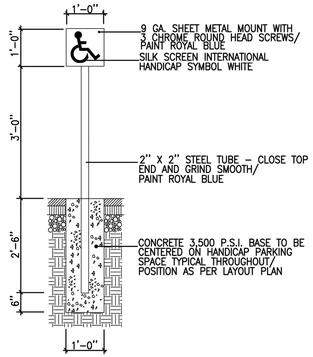

HANDICAPPED PARKING SIGN – DETAIL 5
SCALE: NTS

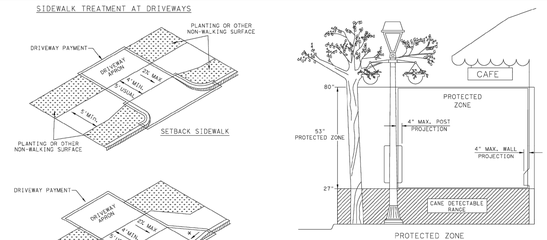

NOTES:
※ WHERE DRIVEWAYS CROSS THE PEDESTRIAN ROUTE, SIDES SHALL BE FLARED AT 10% MAX SLOPE.
※※ IF CURB HEIGHT IS GREATER THAN 6 INCHES, USE GRADE LESS THAN OR EQUAL TO 5%. HANDRAIL AND DETECTABLE WARNING ARE NOT REQUIRED.

PROTECTED ZONE

NOTE: IN PEDESTRIAN CIRCULATION AREA, MAXIMUM 4" PROJECTION FOR POST OR WALL MOUNTED OBJECTS BETWEEN 27" AND 80" ABOVE THE SURFACE.

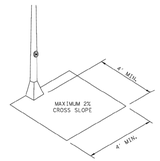

CLEAR SPACE ADJACENT TO PEDESTRIAN PUSH BUTTON

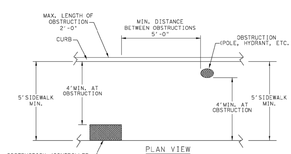

PLAN VIEW
PLACEMENT OF STREET FIXTURES

NOTE: ITEMS NOT INTENDED FOR PUBLIC USE. MINIMUM 4' X 4' CLEAR GROUND SPACE REQUIRED AT PUBLIC USE FIXTURES.

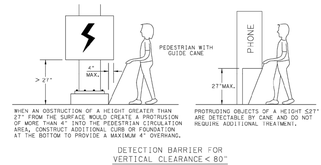

WHEN AN OBSTRUCTION OF A HEIGHT GREATER THAN 27" FROM THE SURFACE WOULD CREATE A PROTRUSION OF 4" OR MORE INTO THE PEDESTRIAN CIRCULATION AREA, DISTINCT ADDITIONAL WARNING IS REQUIRED AT THE BOTTOM TO PROVIDE A MAXIMUM 4' OVERHANG.

PROTRUDING OBJECTS OF A HEIGHT ≤27" ARE DETECTABLE BY CANE AND DO NOT REQUIRE ADDITIONAL TREATMENT.

DETECTION BARRIER FOR VERTICAL CLEARANCE < 80"

NO.	REVISIONS	DATE	NAME
1	ORIGINAL STANDARD ISSUED	2-1-22	RJS

FORT BEND COUNTY ENGINEERING DEPARTMENT

PROJECT TITLE:		
DRAWN BY: INT		FBCED STANDARD
CK'D BY: INT	SHEET DESCRIPTION: PED-18 RAMP DETAILS	16
SCALE: 1" = 1'	SHEET 3 OF 4	SHEET NO. /
DATE: 2-1-22	APPROVED BY:	

J:\1704\1703\Standard Sheets\07 FBC PED-18 RAMP DETAILS\PED-18_RAMP_DETAILS.dwg

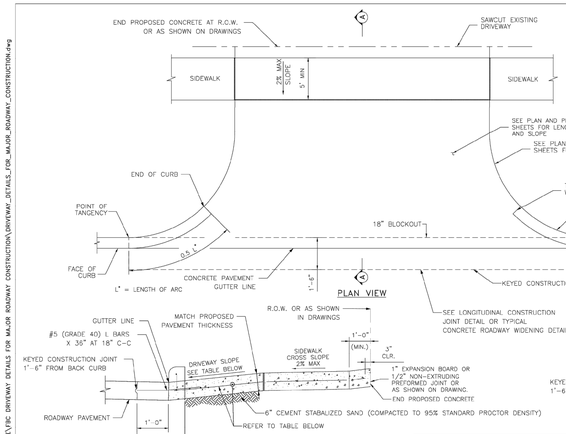

NOTES:
1. SAWCUT EXISTING DRIVEWAY AT R.O.W. LINE OR AS SHOWN ON DRAWING AND REMOVE EXISTING DRIVEWAY TO SAWCUT LINE.
2. WHERE THERE IS NO EXISTING DRIVEWAY, CONNECT PROPOSED CURB TO EXISTING CURB, STRAIGHTAWAY TAPER CURB HEIGHT AS SHOWN.
3. SEE PAVEMENT DETAIL SHEET FOR CONCRETE CURB REINFORCEMENT.
4. THIS DRIVEWAY INSTALLATION IS GOVERNED BY HARRIS COUNTY ITEM 360.
5. DRIVEWAY WIDTHS ARE MEASURED AT THE ROW LINE

MINIMUM RADII REQUIREMENTS – DRIVEWAYS

	LOCAL	COLLECTOR	MAJOR
RESIDENTIAL	5'	5'	–
COMMERCIAL	10'	10'	25'

DRIVEWAY WIDTHS

	MINIMUM	MAXIMUM
RESIDENTIAL	10'	25'
COMMERCIAL	20'	40'

PAVEMENT THICKNESS	COLLECTOR/MAJOR	RESIDENTIAL (MAJOR THOROUGHFARE)	RESIDENTIAL (COLLECTORS AND LOCAL STREETS)
REINFORCEMENT	6"	#4 @ 24" O.C.E.W.	N/A	#4 @ 24" O.C.E.W.
	7"	#4 @ 24" O.C.E.W.	#4 @ 24" O.C.E.W.	#4 @ 24" O.C.E.W.
	8"	#4 @ 18" O.C.E.W.	#4 @ 18" O.C.E.W.	#4 @ 18" O.C.E.W.
	9"–10"	#5 @ 18" O.C.E.W.	#5 @ 18" O.C.E.W.	#5 @ 18" O.C.E.W.
EXPANSION DOWEL JOINT	6"	3/4" DIA. SMOOTH BAR	3/4" DIA. SMOOTH BAR	3/4" DIA. SMOOTH BAR
	7"	1" DIA. SMOOTH BAR	1" DIA. SMOOTH BAR	1" DIA. SMOOTH BAR
	8"	1" DIA. SMOOTH BAR	1" DIA. SMOOTH BAR	1" DIA. SMOOTH BAR
	9"–10"	1½" DIA. SMOOTH BAR	1½" DIA. SMOOTH BAR	1½" DIA. SMOOTH BAR
CONSTRUCTION JOINT DOWEL	ALL	#5 REBAR	#5 REBAR	#5 REBAR
SUBGRADE	ALL	6" CEMENT-STABALIZED SAND	2" BANK SAND	2" BANK SAND
DRIVEWAY SLOPE	ALL	2% TO 4%	2% TO 6%	2% TO 10%*

*10% ALLOWABLE ON PRIVATELY CONSTRUCTED PROJECTS
6% MAX ON PUBLIC PROJECTS

NO.	REVISIONS	DATE	NAME
1	ORIGINAL STANDARD ISSUED	3-1-22	RJS

FORT BEND COUNTY ENGINEERING DEPARTMENT

PROJECT TITLE:		
DRAWN BY: INT		FBCED STANDARD
CK'D BY: INT	SHEET DESCRIPTION: DRIVEWAY DETAILS FOR MAJOR ROADWAY CONSTRUCTION	10
SCALE: 1"=1'–6"		SHEET NO. /
DATE: 3-1-22	APPROVED BY:	

J:\1704\1703\Standard Sheets\07 FBC DRIVEWAY DETAILS FOR MAJOR ROADWAY CONSTRUCTION\DRIVEWAY_DETAILS_FOR_MAJOR_ROADWAY_CONSTRUCTION.dwg

GENERAL NOTES

CURB RAMPS

1. Install a curb ramp or blended transition at each pedestrian street crossing.
2. All slopes shown are maximum allowable. Cross slopes of 1.5% and lesser running should be used. Adjust curb ramp length or grade of approach sidewalks as directed.
3. Maximum allowable cross slope on sidewalk and curb ramp surfaces is 2%.
4. The minimum sidewalk width is 5'. Where the sidewalk is adjacent to the back of curb, a 6' sidewalk width is desirable. Where a 5' sidewalk cannot be provided due to site constraints, sidewalk width may be reduced to 4' for short distances. 5'x 5' passing areas at intervals not to exceed 200' are required.
5. Turning spaces shall be 5'x 5' minimum. Cross slope shall be maximum 2%.
6. Clear space at the bottom of curb ramps shall be a minimum of 4'x 4' wholly contained within the crosswalk and wholly outside the parallel vehicular travel path.
7. Provide flared sides where the pedestrian circulation path crosses the curb ramp. Flared sides shall be sloped at 10% maximum, measured parallel to the curb. Returned curbs may be used only where pedestrians would not normally walk across the ramp, either because the adjacent surface is planned, substantially obstructed, or otherwise protected.
8. Additional information on curb ramp location, design, light reflective value and texture may be found in the latest draft of the Proposed Guidelines for Pedestrian Facilities in the Public Right of Way (PROWAG) as published by the U.S. Architectural and Transportation Barriers Compliance Board (Access Board).
9. To serve as a pedestrian refuge area, the median should be a minimum of 6' wide, measured from back of curbs. Medians should be designed to provide accessible passage over or through them.
10. Small channelization islands, which do not provide a minimum 5'x 5' landing at the top of curb ramps, shall be cut through level with the surface of the street.
11. Crosswalk dimensions, crosswalk markings and stop bar locations shall be as shown elsewhere in the plans. At intersections where crosswalk markings are not required, curb ramps shall align with theoretical crosswalks unless otherwise directed.
12. Provide curb ramps to connect the pedestrian access route at each pedestrian street crossing. Handrails are not required on curb ramps.
13. Curb ramps and landings shall be constructed and paid for in accordance with Item 531 "Sidewalks".
14. Place concrete at a minimum depth of 5" for ramps, flares and landings, unless otherwise directed.
15. Furnish and install No. 3 reinforcing steel bars at 18" o.c. both ways, unless otherwise directed.
16. Provide a smooth transition where the curb ramps connect to the street.
17. Curbs shown on sheet 1 within the limits of payment are considered part of the curb ramp for payment, whether it is concrete curb, or combined curb and gutter.
18. Existing features that comply with applicable standards may remain in place unless otherwise shown on the plans.

DETECTABLE WARNING MATERIAL

19. Curb ramps must contain a detectable warning surface that consists of raised truncated domes complying with PROWAG. The surface must contrast visually with adjoining surfaces, including side flares. Furnish and install an approved cast-in-place dark brown or dark red detectable warning surface material adjacent to uncolored concrete, unless specified elsewhere in the plans.
20. Detectable Warning Materials must meet TxDOT Departmental Materials Specification DMS 4350 and be listed on the Material Producer List. Install products in accordance with manufacturer's specifications.
21. Detectable warning surfaces must be firm, stable and slip resistant.
22. Detectable warning surfaces shall be a minimum of 24 inches in depth in the direction of pedestrian travel, and extend the full width of the curb ramp or landing where the pedestrian access route enters the street.
23. Detectable warning surfaces shall be located so that the edge nearest the curb line is at the back of curb and neither end of that edge is greater than 5 feet from the back of curb. Detectable warning surfaces may be curved along the corner radius.
24. Shaded areas on Sheet 1 of 4 indicate the approximate location for the detectable warning surface for each curb ramp type.

DETECTABLE WARNING PAVERS (IF USED)

25. Furnish detectable warning paver units meeting all requirements of ASTM C-936, C-33. Lay in a two by two unit basket weave pattern or as directed.
26. Lay full-size units first followed by closure units consisting of at least 25 percent (25%) of a full unit. Cut detectable warning paver units using a power saw.

SIDEWALKS

27. Provide clear ground space at operable parts, including pedestrian push buttons. Operable parts shall be placed within unobstructed reach range specified in PROWAG section R406.
28. Place traffic signal or illumination poles, ground boxes, controller boxes, signs, drainage facilities and other items so as not to obstruct the pedestrian access route or clear ground space.
29. Street grades and cross slopes shall be as shown elsewhere in the plans.
30. Changes in level greater than 1/4 inch are not permitted.
31. The least possible grade should be used to maximize accessibility. The running slope of sidewalks and crosswalks within the public right of way may follow the grade of the parallel roadway. Where a continuous grade greater than five percent (5%) must be provided, handrails may be desirable to improve accessibility. Handrails may also be needed to protect pedestrians from potentially hazardous conditions. If provided, handrails shall comply with PROWAG R409.
32. Handrail extensions shall not protrude into the usable landing area or into intersecting pedestrian routes.
33. Driveways and turnouts shall be constructed and paid for in accordance with Item "Intersections, Driveways and Turnouts", Sidewalks shall be constructed and paid for in accordance with Item, "Sidewalks".
34. Sidewalk details are shown elsewhere in the plans.

DETECTABLE WARNING SURFACE DETAILS

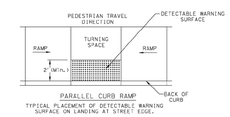

PARALLEL CURB RAMP
TYPICAL PLACEMENT OF DETECTABLE WARNING SURFACE ON LANDING AT STREET EDGE.

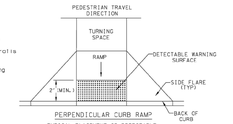

PERPENDICULAR CURB RAMP
TYPICAL PLACEMENT OF DETECTABLE WARNING SURFACE ON SLOPING RAMP RUN.

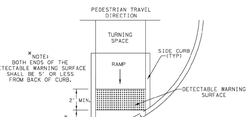

DIRECTIONAL CURB RAMP
TYPICAL PLACEMENT OF DETECTABLE WARNING SURFACE ON SLOPING RAMP RUN.

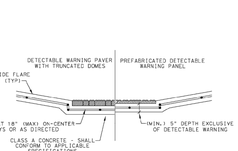

SECTION VIEW DETAIL
CURB RAMP AT DETECTIBLE WARNINGS

NO.	REVISIONS	DATE	NAME
1	ORIGINAL STANDARD ISSUED	2-1-22	RJS

FORT BEND COUNTY ENGINEERING DEPARTMENT

PROJECT TITLE:		
DRAWN BY: INT		FBCED STANDARD
CK'D BY: INT	SHEET DESCRIPTION: PED-18 RAMP DETAILS	15
SCALE: 1" = 1'	SHEET 2 OF 4	SHEET NO. /
DATE: 2-1-22	APPROVED BY:	

19251 Purus Dr.
Porter, TX 77365

WECS

TEXAS BOARD OF PROFESSIONAL ENGINEERS F-19379
4611 BIGGAM DRIVE
FRESNO, TEXAS 77545
(832) 443-4150

BATES ALLEN PARK
BLACK COWBOY MUSEUM
630 CHARLIE ROBERTS LANE

STATE OF TEXAS
GERALD PAUL WILSON
98053
LICENSED PROFESSIONAL ENGINEER

Drawing Date: 06/03/2024
Drawn By: SMA
Checked By: DDV
Scale: NTS

Revisions:

DESCRIPTION	
ISSUE FOR BID & CONSTRUCTION	09/23/2024

STANDARD DETAILS

C8.0

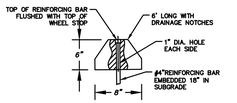

WHEEL STOP – DETAIL 1
SCALE: NTS

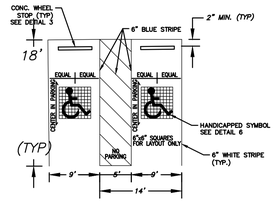

HANDICAPPED STRIPING – DETAIL 2
SCALE: NTS

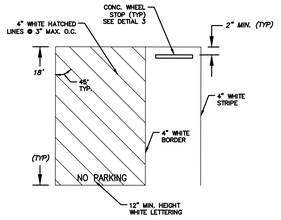

HATCHED AREA ADJACENT TO STALL – DETAIL 3
SCALE: NTS

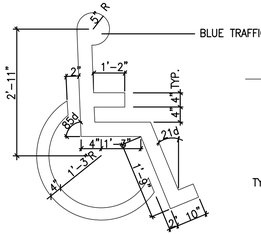

NOTE:
1. SEE SITE PLAN FOR LOCATIONS.
2. ADA STANDARDS FOR ACCESSIBLE DESIGN DIMENSION GOVERN.

ADA RESERVED PARKING SYMBOL PAVEMENT MARKING – DETAIL 4
SCALE: NTS

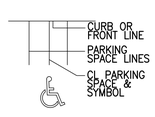

TYP. LOCATION PLAN

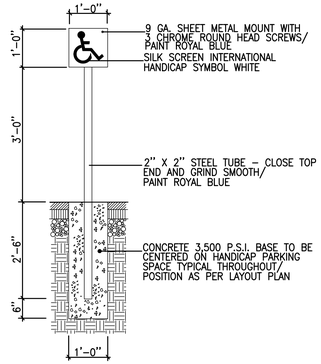

HANDICAPPED PARKING SIGN – DETAIL 5
SCALE: NTS

J:\1-TPW\1601\Fort Bend County Standards\Fort Bend County STD\DWG\STORM WATER POLLUTION PREVENTION PLAN DETAILS\STORM_WATER_POLLUTION_PREVENTION_PLAN_DETAILS.dwg

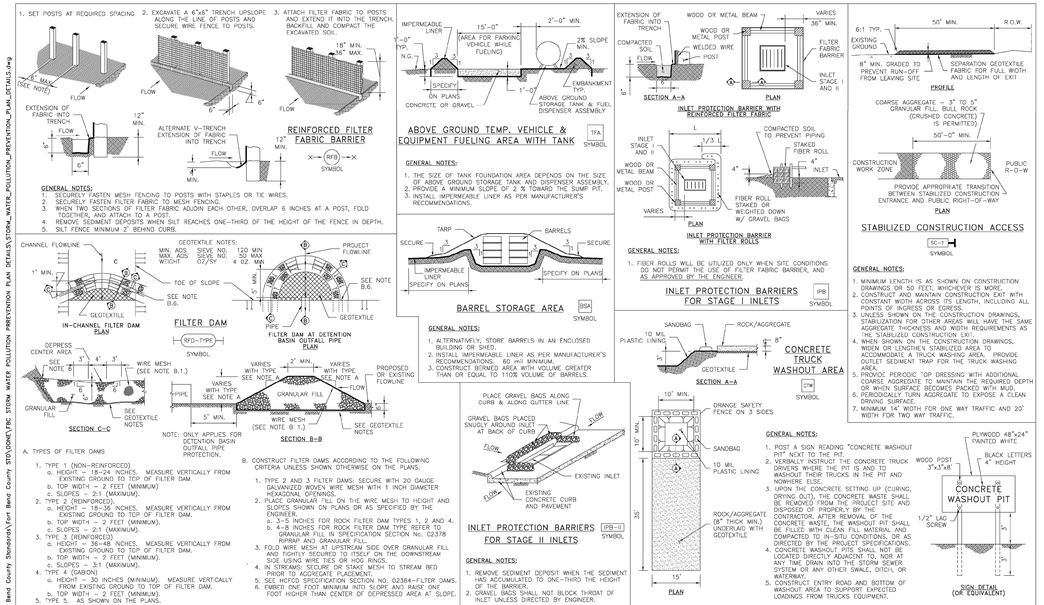

NO.	REVISIONS	DATE	NAME
1	ORIGINAL STANDARD ISSUED	2-1-22	RJS
2			
3			
4			
5			

FORT BEND COUNTY ENGINEERING DEPARTMENT

PROJECT TITLE:	
DRAWN BY: INIT	FBCED STANDARD
CK'D BY: INIT	SHEET DESCRIPTION: STORM WATER POLLUTION 54
SCALE: NONE	PREVENTION PLAN DETAILS SHEET NO.
DATE: 2-1-22	APPROVED BY: /

19251 Purus Dr.
Porter, TX 77365

WECS

TEXAS BOARD OF PROFESSIONAL ENGINEERS F–19379
4611 BIGGAM DRIVE
FRESNO, TEXAS 77545
(832) 443–4150

BATES ALLEN PARK
BLACK COWBOY MUSEUM
630 CHARLIE ROBERTS LANE

J:\1-TPW\1601\Fort Bend County Standards\Fort Bend County STD\DWG\CONCRETE PAVEMENT DETAILS\CONCRETE_PAVEMENT_DETAILS-1of2.dwg

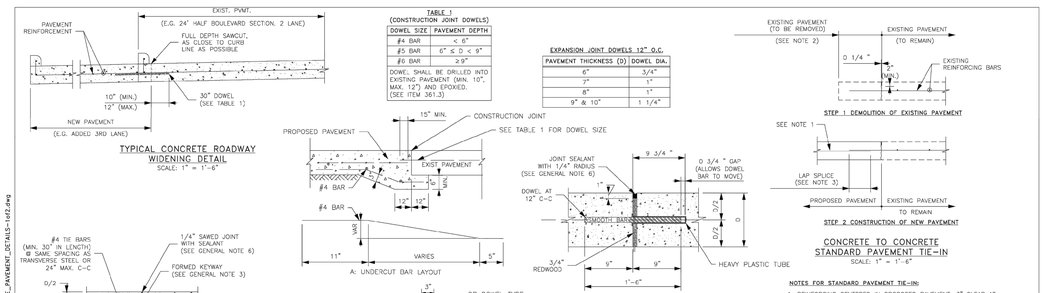

TYPICAL CONCRETE ROADWAY WIDENING DETAIL
SCALE: 1" = 1'–6"

TABLE 1
(CONSTRUCTION JOINT DOWELS)

DOWEL SIZE	PAVEMENT DEPTH
#4 BAR	< 6"
#5 BAR	6" ≤ D < 9"
#6 BAR	≥ 9"

DOWEL, SHALL BE DRILLED INTO EXISTING PAVEMENT (MIN. 10", MAX. 12") AND EPOXIED. (SEE ITEM 361.3)

EXPANSION JOINT DOWELS 12" O.C.

PAVEMENT THICKNESS (D)	DOWEL DIA.
6"	3/4"
7"	1"
8"	1"
9" & 10"	1 1/4"

DOWEL TYPE EXPANSION JOINT
SCALE: 1" = 6"

NOTES FOR DOWEL EXPANSION JOINT:
1. EXPANSION JOINT SHALL BE PLACED AT THE END OF EACH CURB RADIUS AND SPACED AT A MAXIMUM DISTANCE OF 60 FEET.
2. CENTER DOWEL HORIZONTALLY ON JOINT.
3. EXPANSION JOINT BARS SHALL BE HELD PARALLEL TO THE FINISHED CONCRETE SURFACE.

CONCRETE TO CONCRETE STANDARD PAVEMENT TIE–IN
SCALE: 1" = 1'–6"

NOTES FOR STANDARD PAVEMENT TIE–IN:
1. REINFORCING CENTERED IN PROPOSED PAVEMENT, 3" CLEAR AT EDGES.
2. ONLY FULL DEPTH SAWCUTS WILL BE ALLOWED
3. USE FULL DEPTH SAWCUT WITH DRILLED IN DOWELS (AS SHOWN IN THE "TYPICAL CONCRETE ROADWAY WIDENING DETAIL" ON THIS SHEET. THE SAWCUTTING AND DOWELS WILL BE AT CONTRACTOR'S EXPENSE.
4. ALL PAVEMENT CONCRETE SHALL BE 5½ SACK PER CY, 3500, PSI AT 28 DAYS
5. SIZE OF DOWEL BARS SHALL CONFORM TO TABLE 1. DOWELS SHALL BE PLACED 24" CENTER TO CENTER OR MATCH EXISTING, IF CLOSER

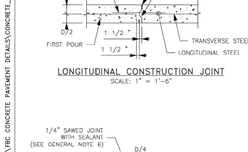

LONGITUDINAL CONSTRUCTION JOINT
SCALE: 1" = 1'–6"

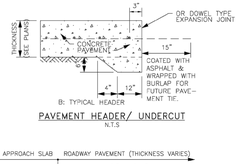

PAVEMENT HEADER/ UNDERCUT
N.T.S

GENERAL NOTES:
1. FOR FURTHER INFORMATION REGARDING THE PLACEMENT OF CONCRETE AND REINFORCING, REFER TO ITEM 360 HARRIS COUNTY SPECIFICATIONS
2. THE CHAIRS USED TO SUPPORT THE BAR MATS SHALL BE OF SUFFICIENT STRUCTURAL QUALITY AND NUMBER TO HOLD THE MAT WITHIN THE PLACEMENT HEIGHT, AND SHALL BE OF A TYPE APPROVED BY THE ENGINEER. SPACING OF BAR SUPPORT CHAIRS SHALL BE 3'–0" MAXIMUM.
3. SAWED CONTRACTION JOINTS SHALL BE USED FOR LONGITUDINAL JOINTS WHEREVER MORE THAN ONE LANE WIDTH IS PLACED IN A SINGLE POUR. KEYED CONSTRUCTION JOINTS SHALL BE USED AT ALL OTHER JOINTS.
4. ALL SAW CUTTING SHOWN ON THIS DETAIL SHALL BE INCIDENTAL TO ITEM 360 "CONCRETE PAVEMENT".
5. D = THICKNESS OF CONCRETE PAVEMENT.
• FOR DEVELOPMENT PROJECTS SEE REGULATIONS OF FORT BEND COUNTY, TEXAS FOR THE APPROVAL AND ACCEPTANCE OF INFRASTRUCTURE.
6. ALL CONSTRUCTION JOINTS SHALL BE SEALED. JOINT SEALANT SHALL CONFORM TO THE REQUIREMENTS OF ITEM 360
7. NO TRAFFIC ON CONCRETE PAVEMENT UNTIL 7 DAYS CURE TIME AND 3,500 PSI HAS BEEN REACHED.

CONTRACTION JOINT (SAWED)
SCALE: 1" = 1'–6"

NOTE FOR CONTRACTION JOINT:
1. 20'–0" MAXIMUM SPACING BETWEEN JOINTS.

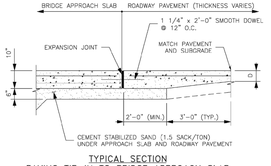

TYPICAL SECTION
PAVING TIE–IN TO BRIDGE APPROACH SLAB
SCALE: 1" = 1'–6"

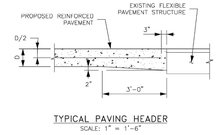

TYPICAL PAVING HEADER
SCALE: 1" = 1'–6"

NOTES FOR PAVING HEADER:
1. ADDITIONAL CONCRETE FOR PAVING HEADER SHALL BE CONSIDERED INCIDENTAL TO VARIOUS PAVING BID ITEMS.
2. DISTURBED MATERIAL IN THE FLEXIBLE PAVEMENT WILL BE BACKFILLED WITH ASPHALT CONCRETE PAVEMENT (ACP). THE ACP WILL BE CONSIDERED INCIDENTAL TO VARIOUS PAVING BID ITEMS.

NO.	REVISIONS	DATE	NAME
1	ORIGINAL STANDARD ISSUED	2-1-22	RJS
2			
3			
4			
5			

FORT BEND COUNTY ENGINEERING DEPARTMENT

PROJECT TITLE:	
DRAWN BY: INIT	FBCED STANDARD
CK'D BY: INIT	SHEET DESCRIPTION: CONCRETE PAVEMENT DETAILS 05
SCALE: AS NOTED	SHEET 1 OF 3 SHEET NO.
DATE: 2-1-22	APPROVED BY: /

J:\1-TPW\1601\Fort Bend County Standards\Fort Bend County STD\DWG\STORM SEWER CONSTRUCTION\STORM_SEWER_CONSTRUCTION_DETAILS.dwg

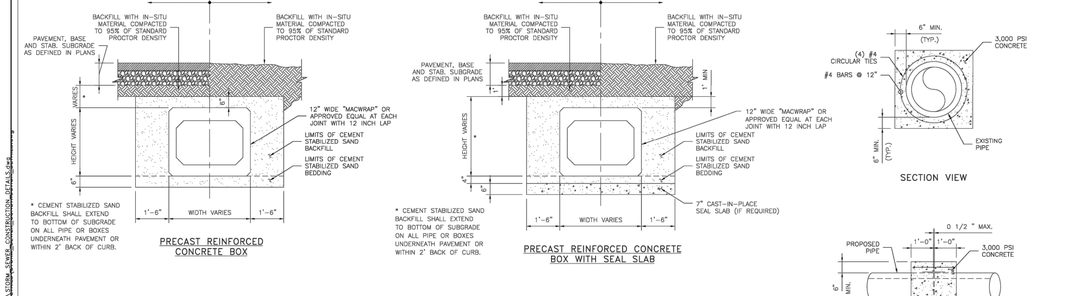

PRECAST REINFORCED CONCRETE BOX

PRECAST REINFORCED CONCRETE BOX WITH SEAL SLAB

SECTION VIEW

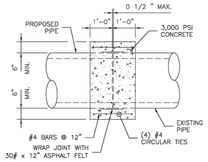

ELEVATION VIEW

TYPICAL CONCRETE COLLAR FOR 36" & SMALLER RCP

GENERAL NOTES:
1. FOR RCP LARGER THAN 36" DIAMETER, CONCRETE COLLARS MUST BE DESIGNED BY THE ENGINEER OF RECORD.
2. ALL TRENCHES IN ROW SHALL BE BACKFILLED WITH 1.5 SACK CEMENT STABILIZED SAND TO WITHIN 1' OF SUBGRADE. COMPACTED TO 95% STANDARD PROCTOR DENSITY

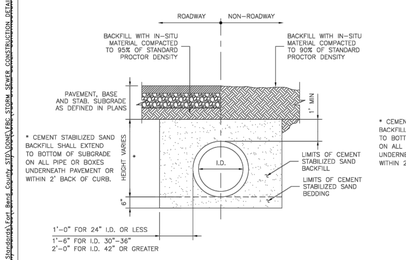

REINFORCED CONCRETE PIPE

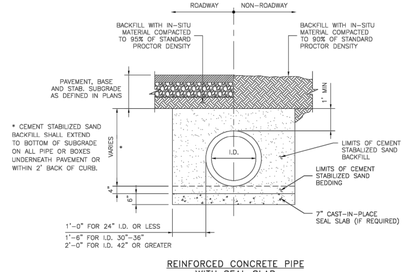

REINFORCED CONCRETE PIPE WITH SEAL SLAB

NO.	REVISIONS	DATE	NAME
1	ORIGINAL STANDARD ISSUED	2-1-22	RJS
2			
3			
4			
5			

FORT BEND COUNTY ENGINEERING DEPARTMENT

PROJECT TITLE:	
DRAWN BY: INIT	FBCED STANDARD
CK'D BY: INIT	SHEET DESCRIPTION: STORM SEWER CONSTRUCTION 18
SCALE: 1"=1'–6"	DETAILS SHEET NO.
DATE: 2-1-22	APPROVED BY: /

GERALD PAUL WILSON
98053
LICENSED PROFESSIONAL ENGINEER

Drawing Date: 06/03/2024
Drawn By: SMA
Checked By: DDV
Scale: NTS

Revisions:

DESCRIPTION	
ISSUE FOR BID & CONSTRUCTION	09/23/2024

STANDARD DETAILS

C8.1

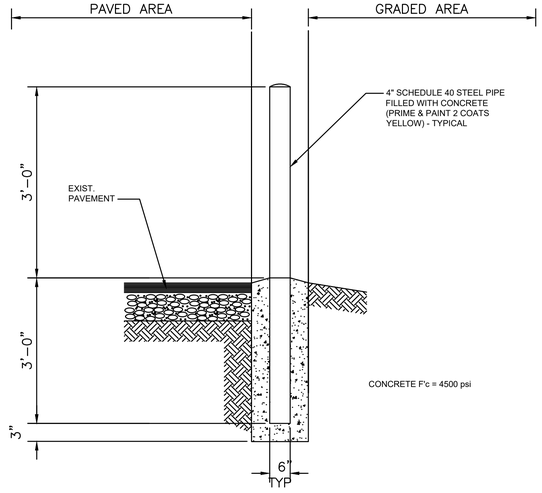

BOLLARD – DETAIL 7

SCALE: NTS

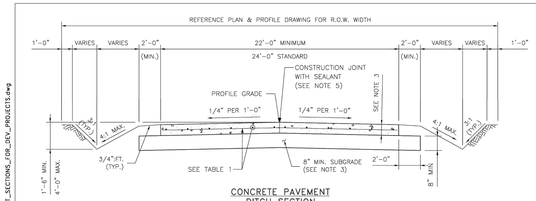

CONCRETE PAVEMENT
DITCH SECTION

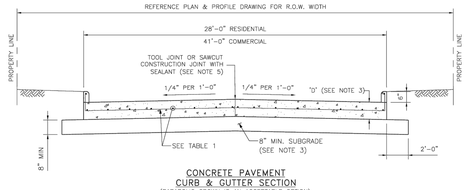

CONCRETE PAVEMENT
CURB & GUTTER SECTION
(PARABOLIC CROWN IS AN ACCEPTABLE OPTION)

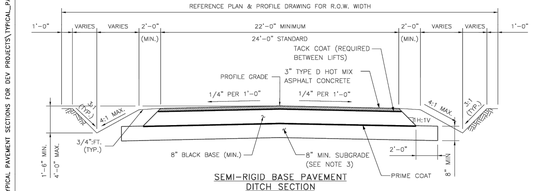

SEMI-RIGID BASE PAVEMENT
DITCH SECTION

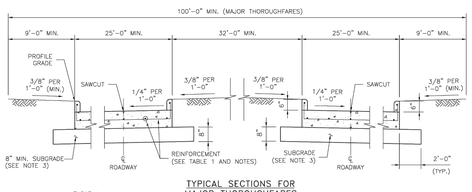

TYPICAL SECTIONS FOR
MAJOR THOROUGHFARES

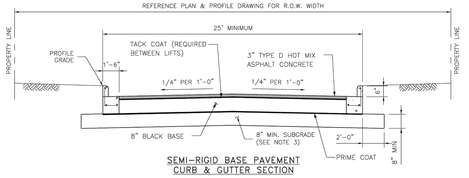

SEMI-RIGID BASE PAVEMENT
CURB & GUTTER SECTION

TABLE 1
(CONSTRUCTION JOINT DOWELS)

DOWEL SIZE	PAVEMENT DEPTH
#4 BAR	< 6"
#5 BAR	6" ≤ D < 9"
#6 BAR	≥ 9"

DOWEL SHALL BE DRILLED INTO EXISTING PAVEMENT (MIN. 10", MAX. 12") AND EPOXIED. (SEE ITEM 361.3)

NOTES:

1. PAVEMENT SECTIONS SHOWN ARE INTENDED FOR DEVELOPMENT PROJECTS AND NOT FOR PUBLIC PROJECTS, WHERE WIDTH OF R.O.W. MAY VARY.
2. PAVEMENT SECTIONS SHALL BE LOCATED IN CENTER OF R.O.W.
3. SUBGRADE TREATMENT AND PAVEMENT THICKNESS AS DESIGNATED IN PLANS.
4. REFERENCE CONSTRUCTION JOINT DETAIL ON THE STANDARD CWL DRAWING "CONCRETE PAVEMENT DETAILS – SHEET 1 OF 2" FOR JOINT AND SEALANT REQUIREMENTS.
5. NO TRAFFIC ON CONCRETE PAVEMENT FOR 7 DAYS AND COMPRESSIVE STRENGTH OF 3,500 psi HAS BEEN REACHED.
6. ALL CONSTRUCTION JOINTS SHALL BE SEALED

HORIZONTAL SCALE: 1"=3'-0"
VERTICAL SCALE: 1"=1'-6"

SLAB AND REBAR NOTES:

1. TYPICAL SLAB THICKNESS D=8"
2. TYPICAL REBAR SIZE AND SPACING ARE:
   a. #4 BAR @ 18" C-C LONGITUDINAL
   b. #4 BAR @ 18" C-C TRANSVERSE
3. REBAR SIZE FOR PAVEMENT LESS THAN 8" THICK
   a. #4 BAR @ 24" C-C LONGITUDINAL
   b. #4 BAR @ 24" C-C TRANSVERSE
4. REBAR SHALL NOT BE PLACED WITHIN 3" FROM THE EDGE OF PAVEMENT.
5. TYPICAL STABILIZED SUBGRADE THICKNESS IS 8 INCHES.
6. FOR HEAVY INDUSTRIAL TRAFFIC, SLAB THICKNESS AND REBAR SIZE AND SPACING WILL BE AS PER GEOTECHNICAL RECOMMENDATION.
7. ALL BENT BARS SHALL BE GRADE 40 STEEL, ALL OTHER SHALL BE GRADE 60.
8. MINIMUM LAP SPLICE 16".
9. LAP SPLICES SHOULD BE ON ALTERNATING BARS, ADJACENT LAP SPLICES ARE NOT ACCEPTABLE.

NO.	REVISIONS	DATE	NAME
1	ORIGINAL STANDARD ISSUED	2-1-22	RJS

FORT BEND COUNTY
ENGINEERING DEPARTMENT

PROJECT TITLE:		
DRAWN BY: INT		FBCED STANDARD
CK'D BY: INT	SHEET DESCRIPTION: TYPICAL PAVEMENT SECTIONS	09
SCALE: AS NOTED	FOR DEVELOPMENT PROJECTS	SHEET NO. /
DATE: 2-1-22	APPROVED BY:	

J:\1704\1601\Fort Bend County Standards\Fort Bend County STD\DWG\PW_TYPICAL PAVEMENT SECTIONS FOR GOV PROJECTS\TYPICAL_PAVEMENT_SECTIONS_FOR_GOV_PROJECTS.dwg

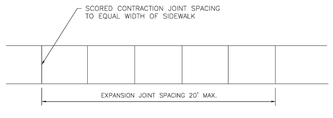

SIDEWALK JOINT DETAILS

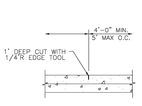

CONTRACTION JOINT SEAL

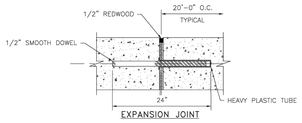

EXPANSION JOINT

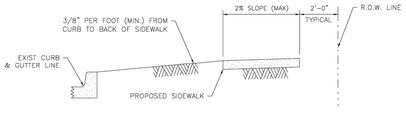

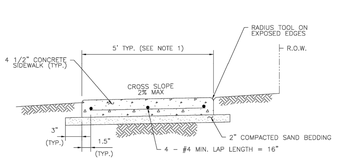

SIDEWALK CROSS SECTION

NOTES:

1. TYPICAL SIDEWALK WIDTH IS 5'. SIDEWALKS OF 4' WIDTH ARE ALLOWED IN FRONT OF SINGLE FAMILY HOMES IF ALL DRIVEWAYS PROVIDE A 5' AREA FOR PASSING. SIDEWALKS OF 4' WITH 5' X 5' PASSING ZONES MUST BE SPECIFICALLY APPROVED BY FORT BEND COUNTY
2. THE MAXIMUM WIDTH BETWEEN EXPANSION JOINTS SHALL NOT EXCEED 20'-0"
3. EXPANSION JOINT IS TO BE 1/2" THICK CLEAR HEART REDWOOD DOWELS
4. SCORED CONTRACTION JOINTS SHALL BE EVERY 5' OR EQUAL TO SIDEWALK WIDTH
5. ALL EARTHEN AREAS ARE TO BE SODDED UNLESS SHOWN OTHERWISE ON DRAWINGS.
6. SIDEWALKS ARE TO BE REINFORCED CONCRETE (3500 PSI) WITH #3 BARS, 18 INCHES C-C.
7. USE RADIUS TOOL ON ALL EXPOSED EDGES.
8. MEMBRANE CURING COMPOUND IS REQUIRED AS DESCRIBED IN ITEM 526 IN THE TXDOT STANDARD SPECIFICATIONS FOR CONSTRUCTION
9. SIDEWALK EXPANSION JOINTS SHALL CONFORM TO STREET EXPANSION JOINT STANDARDS

NOTE:

BANK SAND IS DEFINED AS A WELL-GRADED SAND, FREE OF SILT, CLAY, LOAM, FRIABLE OR SOLUBLE MATERIALS AND ORGANIC MATTER, MEETING THE UNIFIED SOILS CLASSIFICATION SYSTEM GROUP SW CRITERIA W/ A PLASTICITY INDEX OF LESS THAN 10, AND NO MORE THAN 12% OF MATERIAL CAN PASS THE NO. 200 SIEVE.

NO.	REVISIONS	DATE	NAME
1	ORIGINAL STANDARD ISSUED	2-1-22	RJS

FORT BEND COUNTY
ENGINEERING DEPARTMENT

PROJECT TITLE:		
DRAWN BY: INT		FBCED STANDARD
CK'D BY: INT	SHEET DESCRIPTION: SIDEWALK DETAILS	13
SCALE: AS NOTED		SHEET NO. /
DATE: 2-1-22	APPROVED BY:	

J:\1704\1703\Standard Sheets\DWG FORT BEND STANDARDS\Expansion Joints.dwg

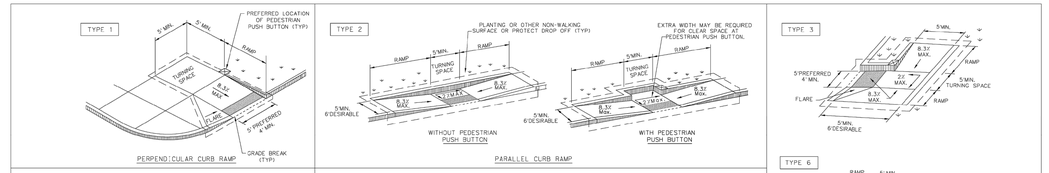

NOTES / LEGEND:

SEE GENERAL NOTES ON SHEET 2 OF 4 FOR MORE INFORMATION.

DENOTES PLANTING OR NON-WALKING SURFACE NOT PART OF PEDESTRIAN CIRCULATION PATH.

DETECTABLE WARNING SURFACE

DENOTES PREFERRED LOCATION OF PEDESTRIAN PUSH BUTTON IF APPLICABLE.

GUTTER LINE

GRADE BREAK

RAMP LIMITS OF PAYMENT

NO.	REVISIONS	DATE	NAME
1	ORIGINAL STANDARD ISSUED	1-1-22	RJS

FORT BEND COUNTY
ENGINEERING DEPARTMENT

PROJECT TITLE:		
DRAWN BY: INT		FBCED STANDARD
CK'D BY: INT	SHEET DESCRIPTION: PED-18 RAMP DETAILS	14
SCALE: 1" = 1'	SHEET 1 OF 4	SHEET NO. /
DATE: 2-1-22	APPROVED BY:	

J:\1704\1703\Standard Sheets\07 TDC PED-18 RAMP DETAILS\PED-18_RAMP_DETAILS.dwg

19251 Purus Dr.
Porter, TX 77365

WECS

TEXAS BOARD OF PROFESSIONAL ENGINEERS F-19379
4611 BIGGAM DRIVE
FRESNO, TEXAS 77545
(832) 443-4150

BATES ALLEN PARK
BLACK COWBOY MUSEUM
630 CHARLIE ROBERTS LANE

STATE OF TEXAS
GERALD PAUL WILSON
98053
LICENSED
PROFESSIONAL ENGINEER

Drawing Date: 06/03/2024
Drawn By: SMA
Checked By: DDV
Scale: NTS

Revisions:

DESCRIPTION	
ISSUE FOR BID & CONSTRUCTION	09/23/2024

STANDARD DETAILS

C8.2

PLAN VIEW
FRAME AND COVER
SCALE: 1" = 1'-0"

NOTE: IF PROJECT IS WITHIN A CITY ETJ OR CITY LIMITS, USE CITY'S STD MANHOLE COVER

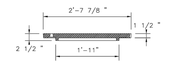

COVER SECTION A-A
SCALE: 1" = 1'-0"

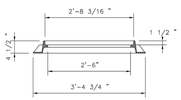

FRAME SECTION A-A
SCALE: 1" = 1'-0"

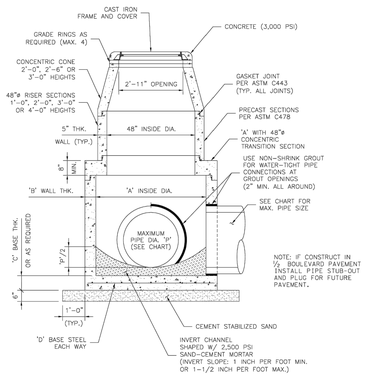

PRECAST CONCENTRIC MANHOLE
FOR PIPE SIZES GREATER THAN 24"
SCALE: 1" = 1'-0"

MAXIMUM PIPE DIA. 'P'	INSIDE DIA. 'A'	WALL THICKNESS 'B'	BASE THICKNESS 'C'	BASE STEEL 'D'
30"	5'-0"	6"	8"	#5 @ 8"
42"	6'-0"	7"	8"	#5 @ 8"
54"	7'-0"	8"	10"	#6 @ 12" (2 LAYERS)
60"	8'-0"	9"	10"	#6 @ 12" (2 LAYERS)

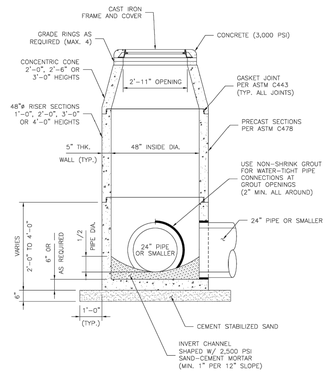

48"ø PRECAST CONCENTRIC MANHOLE
FOR PIPE SIZES 24" OR SMALLER
SCALE: 1" = 1'-0"

GENERAL NOTES:

1. CONSTRUCTION AND MATERIALS SHALL MEET REQUIREMENTS OF ITEM 471 "PRECAST CONCRETE MANHOLES".
2. CONCRETE FOR MANHOLE: MINIMUM 4,000 PSI IN 28 DAYS
3. HS-20 LOADING; MANHOLE DESIGN SHALL MEET OR EXCEED ASTM C478 REQUIREMENTS.
4. GASKET JOINT: PER ASTM C443
5. FRAME AND COVER SHALL BE EAST JORDAN IRON WORKS MODEL V-1420 OR APPROVED EQUAL.
6. SHOP DRAWINGS WITH MANUFACTURER'S CERTIFICATION SHALL BE SUBMITTED FOR ENGINEER'S APPROVAL.

NO.	REVISIONS	DATE	NAME
1	ORIGINAL STANDARD ISSUED	2-1-22	RJS
2			
3			
4			
5			

FORT BEND COUNTY
ENGINEERING DEPARTMENT

PROJECT TITLE:		
DRAWN BY: INT	SHEET DESCRIPTION:	FBCES STANDARD
CK'D BY: INT	PRECAST CONCRETE STORM SEWER	20
SCALE: AS NOTED	MANHOLE DETAILS	SHEET NO.
DATE: 2-1-22	APPROVED BY:	/

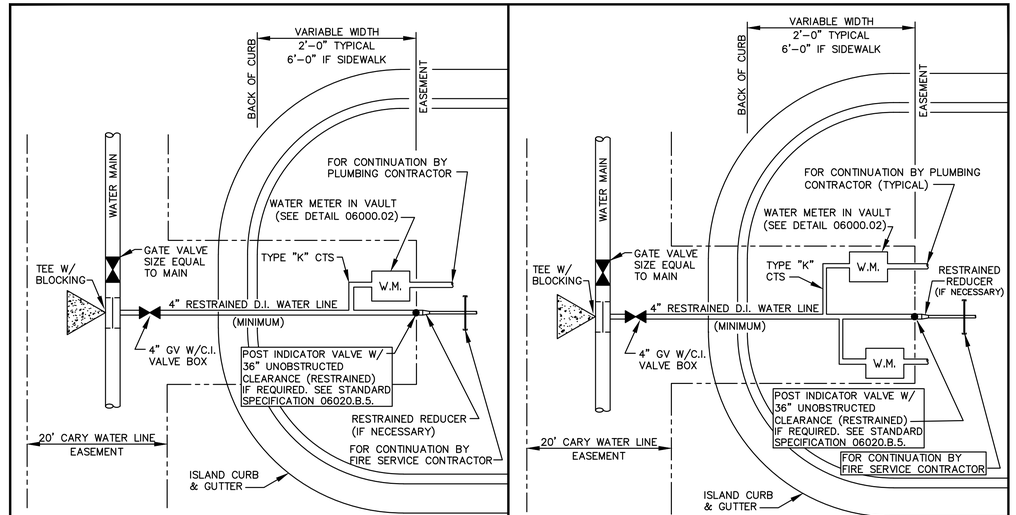

TYPE A – SINGLE SERVICE

TYPE B – DOUBLE SERVICE

NOTES:
1. SYSTEM TO BE MAINTAINED BY THE OWNER PAST THE EASEMENT LINE.
2. MARKING TAPE SHALL BE INSTALLED FOR ALL SERVICE CONNECTIONS FROM THE MAIN LINE TO THE METER FOR ALL NEW CONSTRUCTION OR RETROFIT INSTALLATIONS USING OPEN TRENCH METHODS.

STANDARD COMBINED FIRE & DOMESTIC WATER SERVICE

DETAIL No. 08

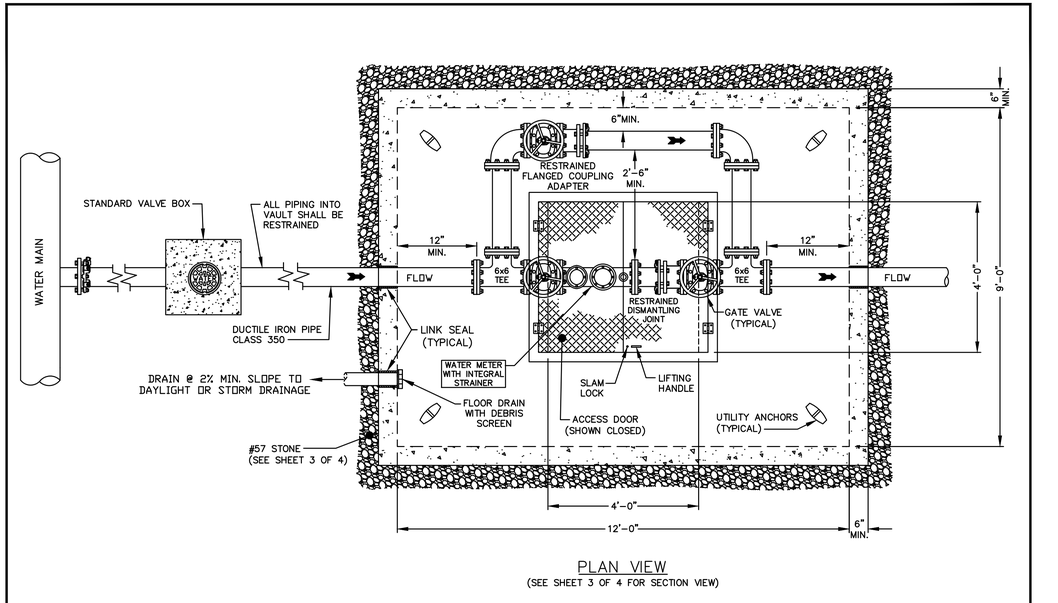

PLAN VIEW
(SEE SHEET 3 OF 4 FOR SECTION VIEW)

STANDARD 6" METER INSTALLATION & VAULT

DETAIL No. 09

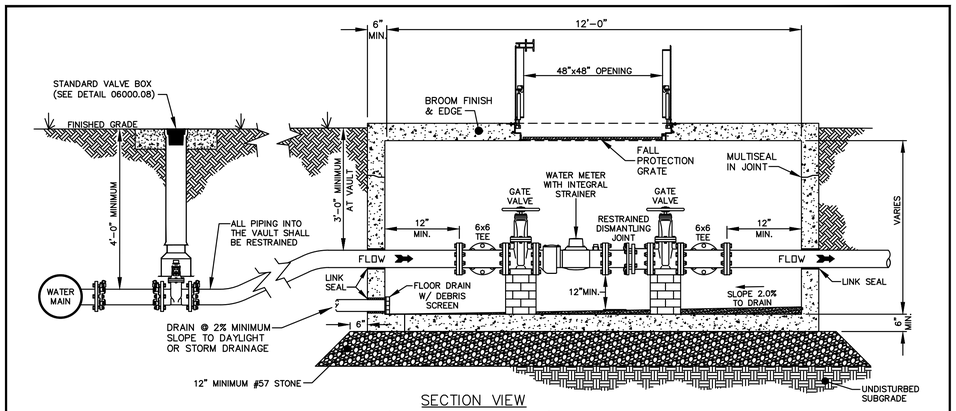

SECTION VIEW
(SEE SHEET 4 OF 4 FOR PLAN VIEW)

GENERAL NOTES:
1. METER AND BYPASS ASSEMBLY PIPING TO BE DUCTILE IRON FLANGED PIPE INSIDE THE VAULT.
2. METER FACE TO BE A MAXIMUM OF 3 FEET BELOW FINISHED GRADE.
3. ACCESS DOOR SHALL BE H-20 RATED ALUMINUM DOUBLE DOOR WITH A MINIMUM OPENING OF 48" x 48".
4. VALVES SHALL BE IRON BODY TYPE, RESILIENT WEDGE GATE VALVES WITH NON-RISING STEM, HANDWHEEL OPERATORS AND FLANGE CONNECTIONS.
5. ALL VALVES SHALL BE SUPPORTED AND THE BYPASS LINE SHALL HAVE A TOTAL OF TWO SUPPORTS. SUPPORTS SHALL BE EITHER SOLID BRICK, SOLID BLOCK, OR STAINLESS STEEL.
6. TO ENSURE POSITIVE DRAINAGE, THE VAULT SHALL BE TIED INTO THE EXISTING STORM DRAINAGE SYSTEM, IF POSITIVE DRAINAGE IS UNOBTAINABLE, A SUMP PUMP SHALL BE LOCATED AND OPERATED IN THE VAULT.
7. ALL COMMERCIAL OR OTHER NON-RESIDENTIAL APPLICATIONS REQUIRE AN ABOVE GROUND BACKFLOW PREVENTER.
8. DOUBLE DOORS SHALL BE LOCKABLE WITH OWNER-SUPPLIED PADLOCK.
9. SEPARATE STRAINER SHALL BE REQUIRED IF PROPOSED METER DOES NOT HAVE AN INTEGRAL STRAINER.

STANDARD 6" METER INSTALLATION & VAULT

DETAIL No. 10

19251 Purus Dr.
Porter, TX 77365

WECS

TEXAS BOARD OF PROFESSIONAL ENGINEERS F-19379
4611 BIGGAM DRIVE
FRESNO, TEXAS 77545
(832) 443-4150

BATES ALLEN PARK
BLACK COWBOY MUSEUM
630 CHARLIE ROBERTS LANE

STATE OF TEXAS
GERALD PAUL WILSON
98053
LICENSED PROFESSIONAL ENGINEER

Drawing Date: 06/03/2024
Drawn By: SMA
Checked By: DDV
Scale: NTS

Revisions:

DESCRIPTION	
ISSUE FOR BID & CONSTRUCTION	09/23/2024

STANDARD DETAILS

C8.3

J:\1704\1601\Fort Bend County Standards\Fort Bend County STD\DGN\FBC PRECAST CONCRETE MANHOLE DETAILS_PRECAST_CONCRETE_MANHOLE_DETAILS.dwg

FIELD ADJUSTMENT INSTRUCTIONS

1. REMOVE THE BODY FROM THE TOP OF THE INDICATOR POST ASSEMBLY.
2. CUT THE REQUIRED LENGTH OFF THE BOTTOM OF THE STANDPIPE FOR THE GROUND LINE TO MATCH UP WITH STANDPIPE GROUND LINE MARK.
3. CUT THE 1 INCH SQ. EXTENSION AT A DISTANCE OF 9 INCHES ABOVE THE TOP OF THE STANDPIPE.
4. SET THE "OPEN" AND "SHUT" TARGETS FOR THE APPROPRIATE VALVE SIZE.
5. RE-ATTACH THE BODY TO THE TOP OF THE INDICATOR POST ASSEMBLY.
6. ALL POST INDICATOR VALVES SHALL BE INSTALLED WITH AN ELECTRONIC UL LISTED TAMPER SWITCH.
7. THERE SHALL BE 36 INCHES OF UNOBSTRUCTED CLEARANCE AROUND THE PERIMETER OF ALL POST INDICATOR VALVES.
8. POST INDICATOR VALVE SHALL BE LOCATED AT A MINIMUM 5 FEET FROM BUILDING.

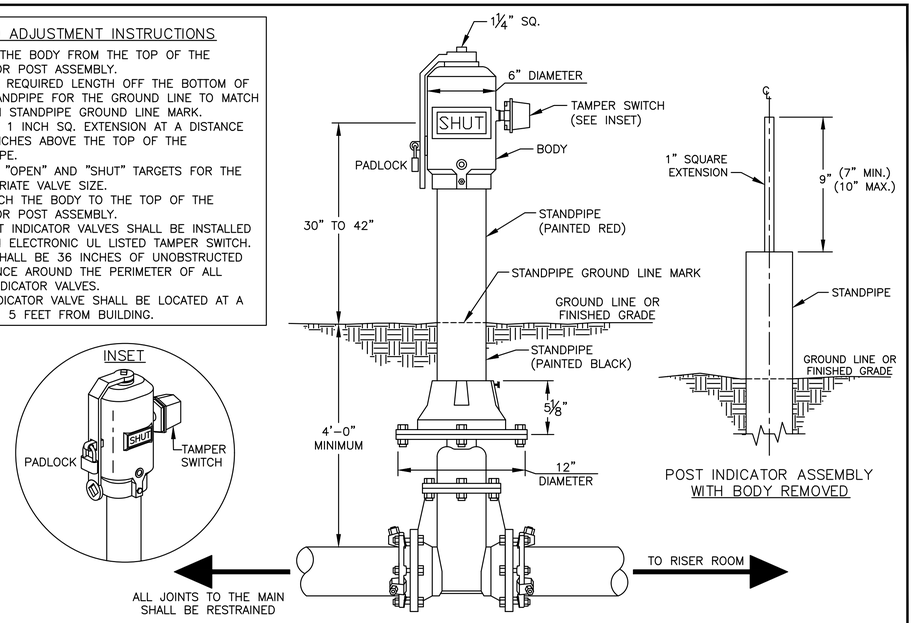

STANDARD POST INDICATOR VALVE

DETAIL No. 11

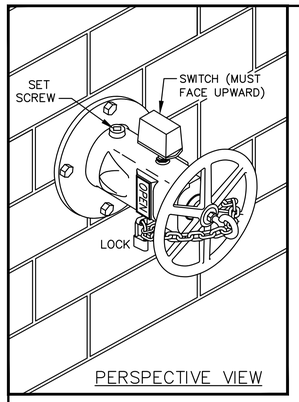

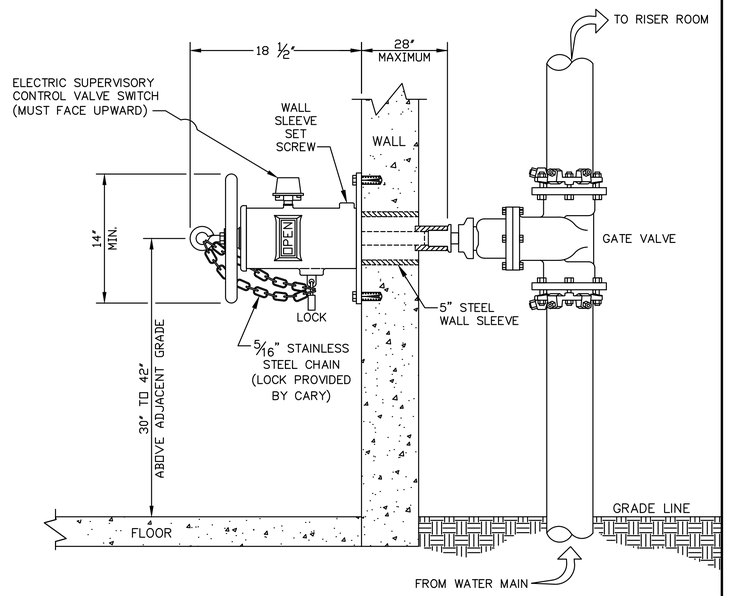

WALL MOUNTED INDICATOR VALVE

DETAIL No. 12

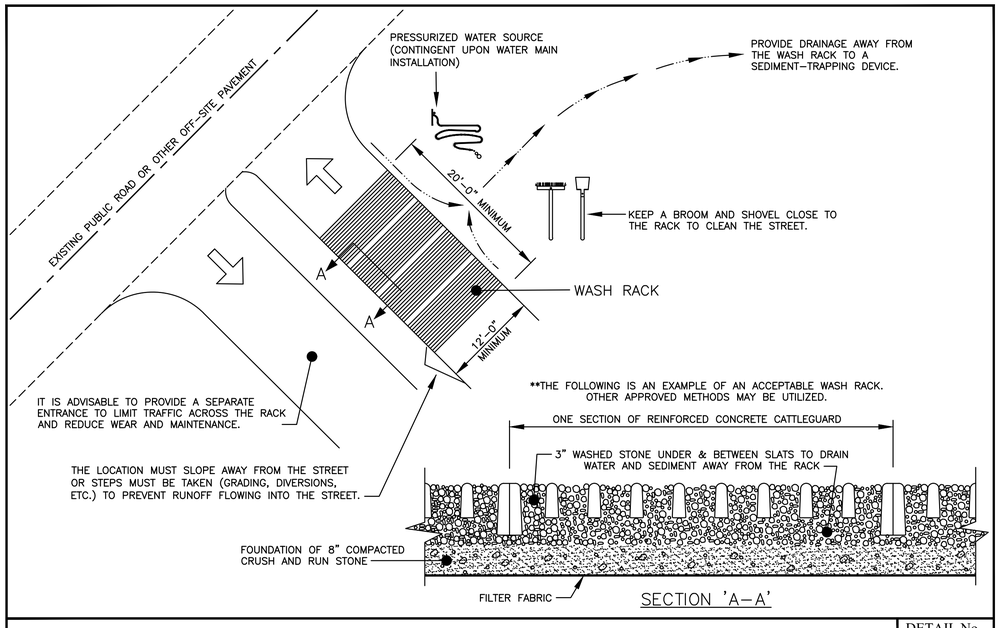

STANDARD CONSTRUCTION EXIT WASH RACK

DETAIL No. 13

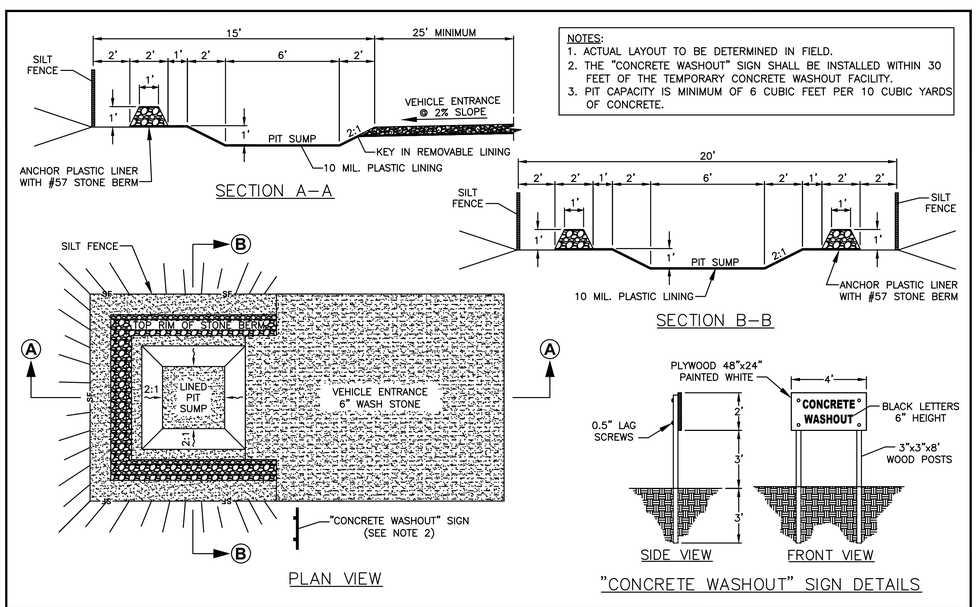

CONCRETE WASHOUT PIT

DETAIL No. 14

19251 Purus Dr.
Porter, TX 77365

WECS

TEXAS BOARD OF PROFESSIONAL ENGINEERS F-19379
4611 BIGGAM DRIVE
FRESNO, TEXAS 77545
(832) 443-4150

BATES ALLEN PARK
BLACK COWBOY MUSEUM
630 CHARLIE ROBERTS LANE

STATE OF TEXAS
GERALD PAUL WILSON
98053
LICENSED PROFESSIONAL ENGINEER

Drawing Date: 06/03/2024
Drawn By: SMA
Checked By: DDV
Scale: NTS

Revisions:

DESCRIPTION	
ISSUE FOR BID & CONSTRUCTION	09/23/2024

STANDARD DETAILS

C8.4

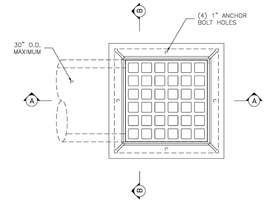

PLAN VIEW

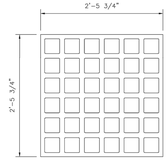

GRATE PLAN VIEW

GRATE SECTION A-A

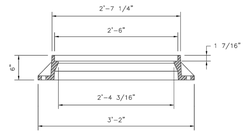

FRAME SECTION A-A

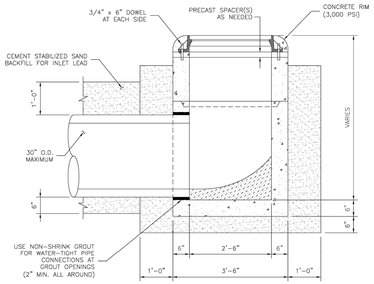

SECTION A-A

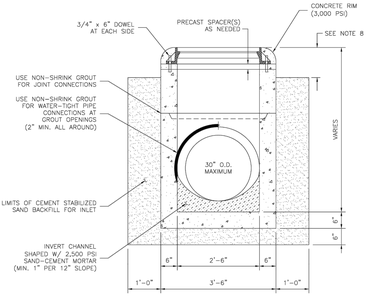

SECTION B-B

GENERAL NOTES:

1. CONSTRUCTION AND MATERIALS SHALL MEET REQUIREMENTS OF ITEM 472 "INLETS".
2. CONCRETE FOR INLET: MINIMUM 4,000 PSI IN 28 DAYS
3. PRECAST STRUCTURE TO MEET ASTM C913
4. FRAME AND GRATE SHALL BE EAST JORDAN IRON WORKS MODEL V-4880-1 (OPEN AREA 473 SQ. IN.) OR APPROVED EQUAL
5. IF THE ENGINEER OF RECORD SPECIFIES A CAST-IN-PLACE INLET, HE/SHE SHALL INCORPORATE A DETAILED DRAWING INTO THE CONTRACT DOCUMENTS. HOWEVER, IF THE CONTRACTOR ELECTS TO CONSTRUCT A CAST-IN-PLACE INLET, THE CONTRACTOR WILL BE RESPONSIBLE FOR PROVIDING A DETAILED DRAWING, SIGNED AND SEALED BY A REGISTERED PROFESSIONAL ENGINEER LICENSED TO PRACTICE IN THE STATE OF TEXAS.
6. SHOP DRAWINGS SHALL BE REQUIRED FOR PRECAST CONSTRUCTION OF INLETS.
7. KNOCK-OUTS ARE NOT PERMISSIBLE FOR PRECAST CONSTRUCTION OF INLET.
8. CEMENT STABILIZED SAND SHALL EXTEND TO THE BOTTOM OF PAVEMENT OR SLOPE PAVING, OR 12 INCHES BELOW THE SURFACE IF INLET IS LOCATED IN AN UNPAVED AREA.

NO.	REVISIONS	DATE	NAME
1	ORIGINAL STANDARD ISSUED	2-1-22	RJS
2			
3			
4			
5			

FORT BEND COUNTY
ENGINEERING DEPARTMENT

PROJECT TITLE:	
DRAWN BY: INIT	FBCED STANDARD
DES'D BY: INIT	SHEET DESCRIPTION: TYPE "A" INLET DETAILS 22
SCALE: 1"=1'-0"	FOR MAXIMUM 30" O.D. PIPE SHEET NO.
DATE: 2-1-22	APPROVED BY: /

I:\TDA\160\Fort Bend County Standards\Fort Bend County STD\DGN\CVBC TYPE A INLET DETAILS\TYPE_A_INLET_DETAILS.dwg

19251 Purus Dr.
Porter, TX 77365

WECS

TEXAS BOARD OF PROFESSIONAL ENGINEERS F-19379
4611 BIGGAM DRIVE
FRESNO, TEXAS 77545
(832) 443-4150

BATES ALLEN PARK
BLACK COWBOY MUSEUM
630 CHARLIE ROBERTS LANE

STATE OF TEXAS
GERAD PAUL NELSON
98053
LICENSED
PROFESSIONAL ENGINEER

Drawing Date: 06/03/2024
Drawn By: SMA
Checked By: DDV
Scale: NTS

Revisions:

DESCRIPTION	
ISSUE FOR BID & CONSTRUCTION	09/23/2024

STANDARD DETAILS

C8.6

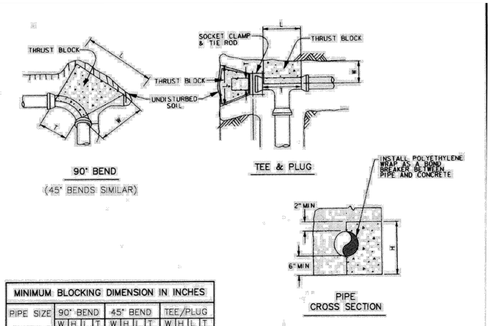

MINIMUM BLOCKING DIMENSION IN INCHES												
PIPE SIZE	90° BEND			45° BEND			TEE/PLUG		
	W	H	L	T	W	H	L	T	W	H	L	T
4"	6	12	14	10	6	8	11	8	6	10	12	12
6"	8	14	26	12	8	14	14	12	8	14	19	19
8"	10	16	40	16	10	18	20	16	10	18	26	26
10"	12	24	42	18	12	22	25	18	12	24	30	30
12"	14	36	40	30	14	26	30	22	14	26	40	40

CORRECTION FACTORS		
SOIL TYPE	SOIL BEARING STRENGTH S_b (lb/ft²)	MULTIPLY "L" AND "H" BY
SOFT CLAY	1000	1.73
SILT	1500	1.41
SANDY SILT	3000	1.00
SAND	4000	0.87
SANDY CLAY	6000	0.71
HARD CLAY	9000	0.58

NOTES:

1. DEPTH "H" MAY BE GREATER THAN SPECIFIED TO ALLOW WORKING SPACE.
2. BLOCKING MUST BE PLACED AGAINST UNDISTURBED EARTH. WHERE THIS IS NOT POSSIBLE, THE FILL BETWEEN THE BEARING SURFACE AND UNDISTURBED SOIL MUST BE COMPACTED TO AT LEAST 90% STANDARD PROCTOR DENSITY.
3. PROVIDE CONCRETE IN ACCORDANCE WITH STANDARD SPECIFICATION SECTION 03315 – CONCRETE FOR UTILITY CONSTRUCTION.
4. BLOCKING DIMENSIONS SHOWN ARE BASED ON 3000 PSI SOIL BEARING STRENGTH AND 125 PSI INTERNAL WATER PRESSURE. FOR OTHER SOIL CONDITIONS, MULTIPLY DIMENSIONS "L" AND "H" BY THE APPROPRIATE CORRECTION FACTOR.

STANDARD WATER LINE THRUST BLOCK

DETAIL No. 15

PIPE TAPPING SCHEDULE				
WATER MAIN TYPE AND DIAMETER	SERVICE SIZE			
	3/4"	1"	1 1/2"	2"
4" CAST IRON OR DUCTILE IRON	DSS, WBSS	DSS, WBSS	DSS, WBSS	DSS, WBSS
4" ASBESTOS (EXISTING) CEMENT	WBSS	WBSS	DSS, WBSS	DSS, WBSS
4" PVC (AWWA C900)	DSS, WBSS	DSS, WBSS	DSS, WBSS	DSS, WBSS
6" AND 8" CAST IRON OR DUCTILE IRON	DSS, WBSS	DSS, WBSS	DSS, WBSS	DSS, WBSS
6" AND 8" ASBESTOS (EXISTING) CEMENT	DSS, WBSS	DSS, WBSS	DSS, WBSS	DSS, WBSS
6" AND 8" CAST IRON OR DUCTILE IRON	DSS, WBSS	DSS, WBSS	DSS, WBSS	DSS, WBSS
6" AND 8" PVC (AWWA C900)	DSS, WBSS	DSS, WBSS	DSS, WBSS	DSS, WBSS
12" CAST IRON OR DUCTILE IRON	DSS, WBSS	DSS, WBSS	DSS, WBSS	DSS, WBSS
12" ASBESTOS (EXISTING) CEMENT	DSS, WBSS	DSS, WBSS	DSS, WBSS	DSS, WBSS
12" PVC (AWWA C900)	DSS, WBSS	DSS, WBSS	DSS, WBSS	DSS, WBSS
16" AND UP CAST IRON OR DUCTILE IRON	DWBSS	DWBSS	DWBSS	DWBSS
16" AND UP ASBESTOS (EXISTING) CEMENT	DWBSS	DWBSS	DWBSS	DWBSS
16" AND UP PVC (AWWA C900)	DWBSS	DWBSS	DWBSS	DWBSS

DSS – DUAL STRAP SADDLES
WBSS – WIDE BAND STRAP SADDLES
DWBSS – DUAL WIDE BAND STRAP SADDLES

STANDARD WATER LINE SERVICE TAPS

DETAIL No. 16

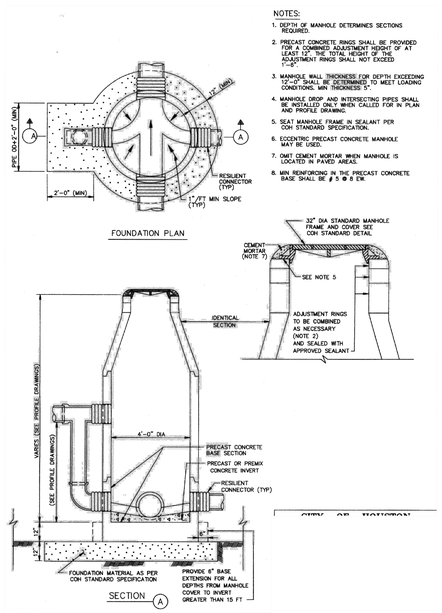

STANDARD SANITARY SEWER MANHOLE

DETAIL No. 16

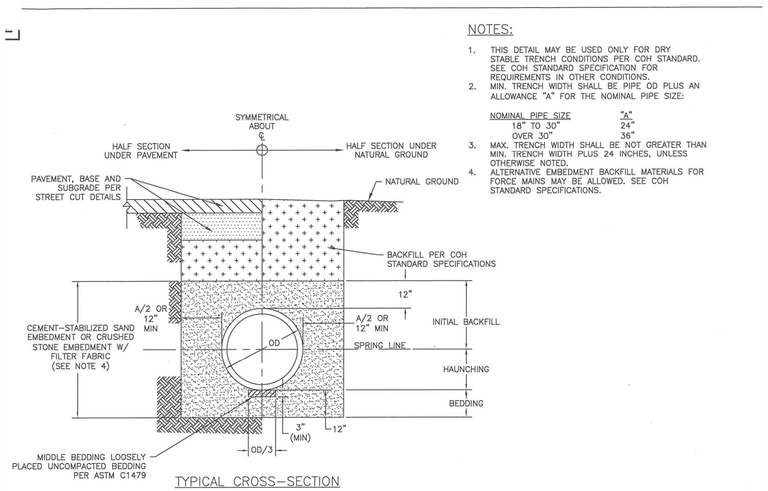

SANITARY OR STORM SEWER BEDDING AND BACKFILL FOR DRY STABLE TRENCH
NTS

SANITARY BEDDING AND BACKFILL FOR DRY STABLE TRENCH
NTS

DETAIL No. 17

19251 Purus Dr.
Porter, TX 77365

WECS

TEXAS BOARD OF PROFESSIONAL ENGINEERS F-19379
4611 BIGGAM DRIVE
FRESNO, TEXAS 77545
(832) 443-4150

BATES ALLEN PARK
BLACK COWBOY MUSEUM
630 CHARLIE ROBERTS LANE

STATE OF TEXAS
GERAD PAUL NELSON
98053
LICENSED PROFESSIONAL ENGINEER

Drawing Date: 06/03/2024
Drawn By: SMA
Checked By: DDV
Scale: NTS

Revisions:

DESCRIPTION	
ISSUE FOR BID & CONSTRUCTION	09/23/2024

STANDARD DETAILS

C8.5

OVERALL LANDSCAPING SITE PLAN

SCALE: 1" = 350'

8

GENERAL NOTES

1. LOCATE ALL UTILITIES ON THE SITE PRIOR TO COMMENCING ANY WORK. ANY DAMAGE DONE TO EXISTING OR NEW UTILITIES SHALL BE REPAIRED OR REPLACED AT NO ADDITIONAL COST TO THE OWNER.
2. STAKE OUT ALL TREE LOCATIONS AND PLANTING BED EDGE CONFIGURATIONS APPROVAL BY THE OWNER'S REPRESENTATIVE PRIOR TO INSTALLATION. BED EDGES SHALL HAVE SMOOTH, EVEN LINES AS SHOWN ON THE DRAWINGS. LOCATE AS DIMENSIONED ON PLANS.
3. COORDINATE WORK WITH THE WORK OF OTHER TRADES ON THE SITE.
4. ENTIRE SITE SHALL BE GRADED TO FINISH GRADE PRIOR TO SCHEDULING PLANTING INSTALLATION.
5. COORDINATE WITH APPLICABLE UTILITY COMPANIES AS REQUIRED DURING THE COURSE OF THE INSTALLATION.
6. APPLY FOR AND PROCURE REQUIRED PERMITS PRIOR TO COMMENCING WORK.
7. PLANTS SHALL BE SPECIMEN QUALITY, FULL POT AND HEAD, SYMMETRICAL FOLIAGE AND BRANCHING STRUCTURE. SHRUBS SHALL BE FULL TO GROUND.
8. PROVIDE SAMPLES OF EACH SHRUB AND GROUNDCOVER SPECIES FOR APPROVAL BY THE OWNER PRIOR TO DELIVERY TO THE SITE. PROVIDE PHOTOGRAPHS WITH SCALE FIGURES FOR TREES OR SAMPLE TREES FROM LOCAL NURSERY (60 MILE ROD FROM HOUSTON) FOR APPROVAL BY THE OWNER PRIOR TO DELIVERY TO THE SITE.
9. PLANT MATERIAL OF THE SAM SPECIES SHALL BE MATCHING IN CHARACTER AND SIZE, OBTAINED FROM THE SAME SOURCE.
10. ALTERNATE SPACING OF PLANT MATERIAL WHEN PLANTING IN LARGE MASSES, UNLESS OTHERWISE NOTED.
11. REFER CLOSELY TO SPECIFICATIONS FOR PLANTING WORK REQUIREMENTS.
12. WHERE AREAS ARE MARKED AS HYDRO-MULCH, IT SHALL MEAN BERMUDA GRASS HYDRO-MULCH UNLESS OTHERWISE NOTES. LANDSCAPE CONTRACTOR SHALL FINE GRADE AND HYDRO-MULCH ALL AREAS DAMAGED BY CONSTRUCTION OF THIS PACKAGE.
13. ALL BED EDGES SHALL BE CUT BED EDGES EXCEPT WHERE NOTED.

KEY NOTES

SYMBOL	DESCRIPTION
1	14" LIVE OAK
2	MULCH BED
3	CRAPE MYRTLE
4	WAX LEAF HEDGES
5	MIX DWARF SHRUBS
6	(30) WAX LEAF LAGUSTRIMS
7	AZALEA PLANTS
8	
9	

FLOOR PLAN LEGEND

SYMBOL	DESCRIPTION
1 A-301	BUILDING SECTION TAG WALL SECTION TAG
1 A-201	EXTERIOR ELEVATION TAG
1 A-211	INTERIOR ELEVATION TAG
1 A-431	PLAN REFERENCE TAG

PLAN NORTH

TRUE NORTH

VCS architects

19251 Purus Dr.
Porter, TX 77365

CONSULTANTS

BATES ALLEN PARK
BLACK COWBOY MUSEUM
630 CHARLIE ROBERTS LANE
KENDLETON TX. 77451

REGISTERED ARCHITECT
REGINALD L. MARK
10098
STATE OF TEXAS

9/20/24

Drawing Date: 06/03/2024
Drawn By: SMA
Checked By: DDV
Scale: AS NOTED

Revisions:

DESCRIPTION	
ISSUE FOR BID & CONSTRUCTION	09/23/2024

Drawing Name

OVERALL LANDSCAPING SITE PLAN

L-101

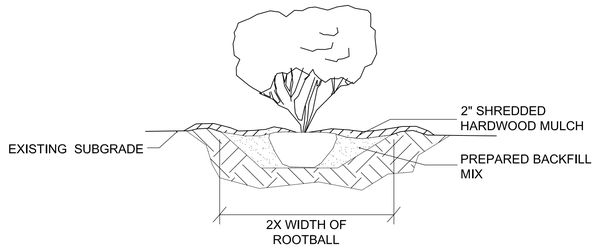

TYP. SHRUB PLANTING SCALE: 1/4"=1'-0" 4

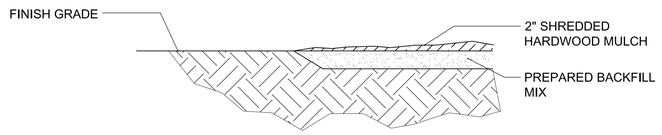

CUT BED EDGE DETAIL SCALE: 1/4"=1'-0" 3

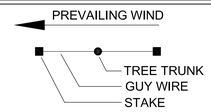

PLAN VIEW

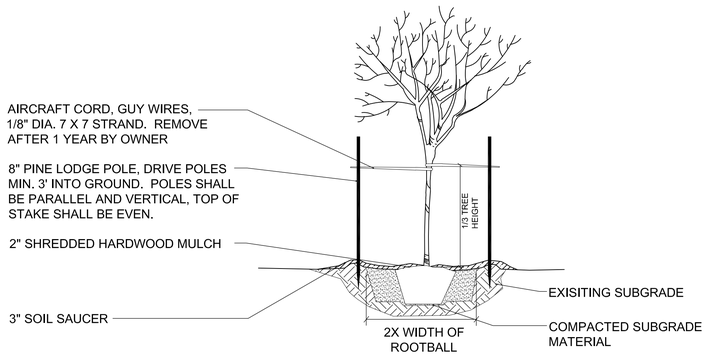

SMALL TREE PLANTING (<2" CAL.) SCALE: 1/4"=1'-0" 2

PLANTING REQUIREMENTS SCALE: 1/4"=1'-0" 5

QTY	KEY	SCIENTIFIC NAME	COMMON NAME	SIZE/ REMARKS
TREES				
4	CR	LAGERSTROEMIA	CREPE MYRTLE	1 1/2" DIAMETER
6	LO	QUERCUS VIRGINIANA	LIVE OAK	14" DIAMETER
SHRUBS				
70	WL	LIGUSTRUM LUCIDUM	WAX LEAF HEDGES	(1 GAL) 12" HT.
PLANTS				
20	AZ	RHODODENDRON	AZALEA	(1 GAL) 12" HT.

PLANTING SCHEDULE SCALE: 1/64"=1'-0" 1 GENERAL NOTES

VCS architects
19251 Purus Dr.
Porter, TX 77365

CONSULTANTS

BATES ALLEN PARK
BLACK COWBOY MUSEUM
630 CHARLIE ROBERTS LANE
KENDLETON TX. 77451

REGISTERED ARCHITECT ROSINA MARK 10008 STATE OF TEXAS
9/20/24

Drawing Date: 06/03/2024
Drawn By: SMA
Checked By: DDV
Scale: AS NOTED

Revisions:

DESCRIPTION	
ISSUE FOR BID & CONSTRUCTION	09/23/2024

Drawing Name

LANDSCAPE PLANTING NOTES AND DETAILS

L-102

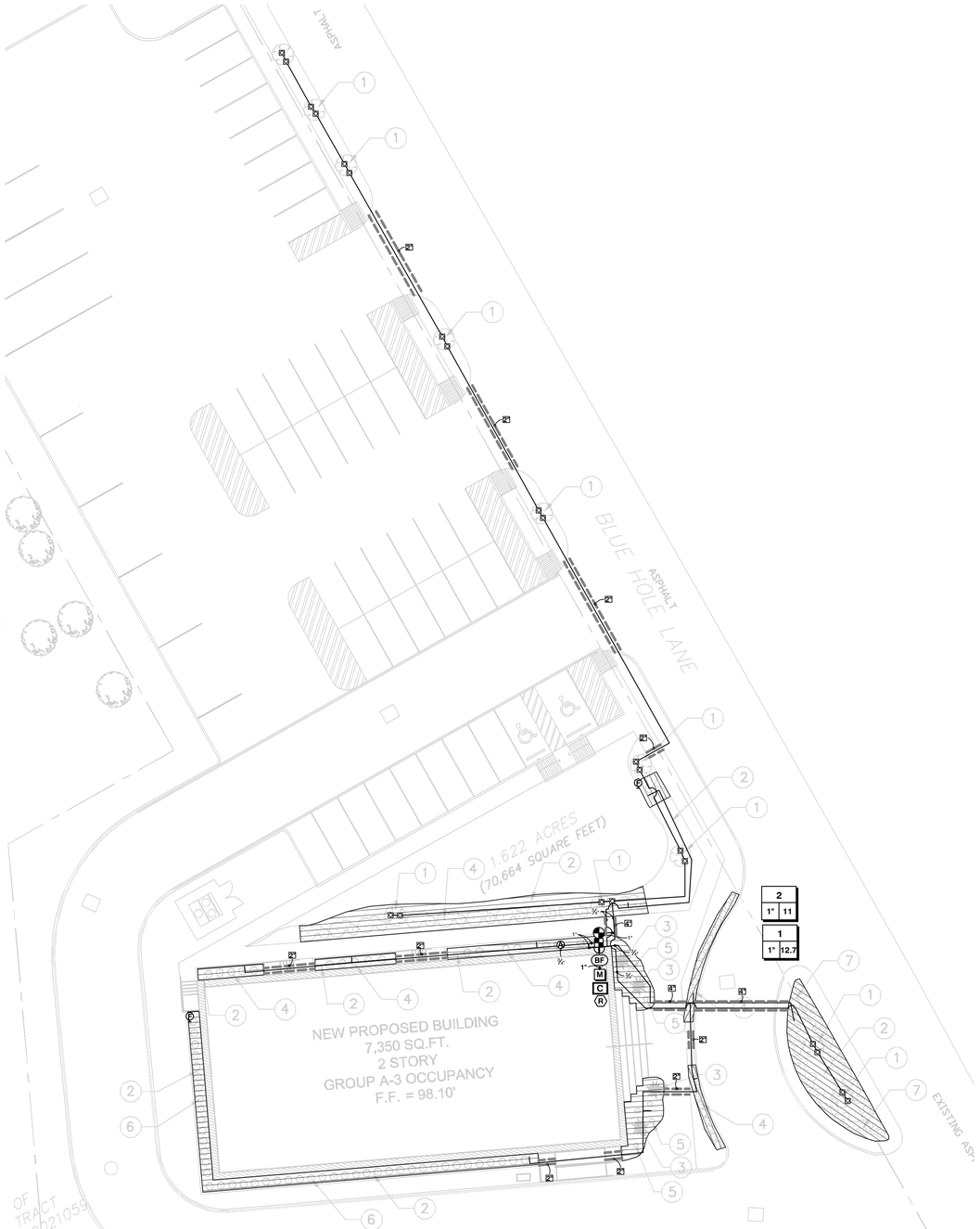

IRRIGATION SCHEDULE

SYMBOL	MANUFACTURER/MODEL	QTY	ARC	PSI	RADIUS
	Rain Bird 1800-1400 Flood 1402	22	360	30	3'

SYMBOL	MANUFACTURER/MODEL	QTY	PSI
	Rain Bird XCZ-100-PRF 1"	1	
F	Rain Bird MDCFCAP	2	
A	Rain Bird ARV050 1/2"	1	
	Area to Receive Dripline Rain Bird XFDe-06-18	1,904 l.f.	30

SYMBOL	MANUFACTURER/MODEL	QTY
	Rain Bird PGA Globe 1"	1
BF	Febco 765 1"	1
C	Rain Bird ESP4ME3	1
R	Rain Bird WR2-RC	1
M	Water Meter 1"	1
	Irrigation Lateral Line: PVC Class 200 SDR 21 3/4"	858.8 l.f.
	Irrigation Lateral Line: PVC Class 200 SDR 21 1"	14.5 l.f.
	Irrigation Mainline: PVC Class 200 SDR 21 1"	12.5 l.f.
	Pipe Sleeve: PVC Schedule 40 2"	144.8 l.f.
	Pipe Sleeve: PVC Schedule 40 4"	42.8 l.f.

Valve Callout

NORTH 1" = 20'

0 20 40 60 80 feet

Project Name :

BATES ALLEN PARK
BLACK COWBOY MUSEUM
CHARLIE ROBERTS LANE
EAST BERNARD,TX

Customer Name :

Design Date: 10/07/24

REVISIONS

Description	Date
1	
2	
3	
4	
5	
6	

Drawing Title:

Irrigation Plan

Drawing Scale: 1" =20'

Project Number: 0000000

Sheet Number:

IR-1

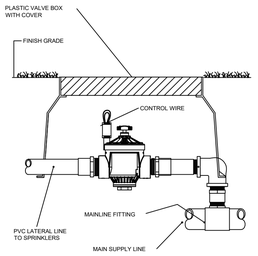

REMOTE CONTROL VALVE

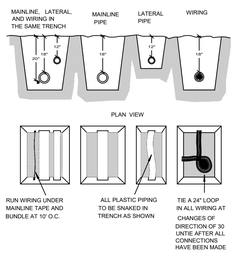

PIPE AND WIRE TRENCH

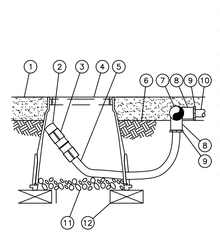

NOTE:
1. ALLOW A MINIMUM OF 6-INCHES OF DRIPLINE TUBING IN VALVE BOX IN ORDER TO DIRECT FLUSHED WATER OUTSIDE VALVE BOX.

DRIPLINE FLUSH POINT

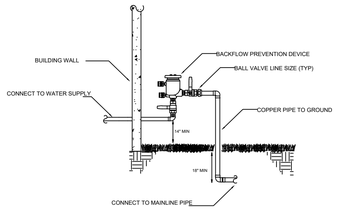

PRESSURE VACUUM BREAKER

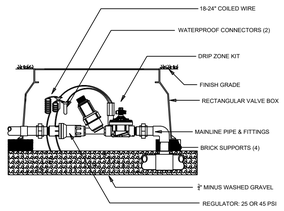

DRIP VALVE ASSEMBLY

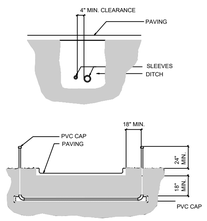

IRRIGATION SLEEVING

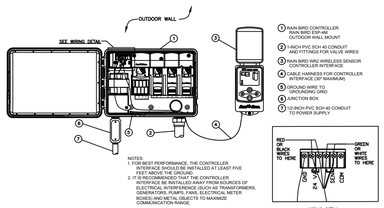

WIRELESS RAIN SENSOR (OUTDOOR)
NTS WR2 SERIES CONTROLLER INTERFACE

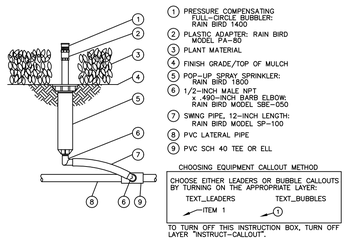

PRESSURE COMPENSATING
FULL-CIRCLE BUBBLER
RAIN BIRD 1400 ON 1800 POP-UP

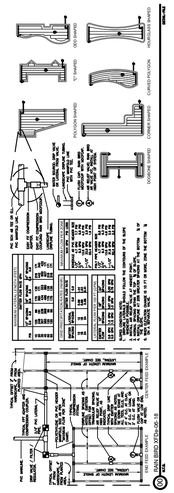

CRITICAL ANALYSIS

P.O.C. NUMBER: 01
Water Source Information: Location TBD

FLOW AVAILABLE	
Water Meter Size:	1"
Flow Available	18.2 GPM
PRESSURE AVAILABLE	
Static Pressure at POC:	57 PSI
Elevation Change:	5.00 ft
Service Line Size:	1"
Length of Service Line:	20 ft
Pressure Available:	52 PSI
DESIGN ANALYSIS	
Maximum Station Flow:	12.69 GPM
Flow Available at POC:	18.2 GPM
Residual Flow Available:	5.51 GPM
Design Pressure:	30 PSI
Friction Loss:	1.45 PSI
Fittings Loss:	0.15 PSI
Elevation Loss:	0 PSI
Loss through Valve:	13.7 PSI
Pressure Req. at Critical Station:	45.3 PSI
Loss for Fittings:	0.02 PSI
Loss for Main Line:	0.21 PSI
Loss for POC to Valve Elevation:	0 PSI
Loss for Backflow:	3.65 PSI
Loss for Water Meter:	0.97 PSI
Critical Station Pressure at POC:	50.1 PSI
Pressure Available:	52 PSI
Residual Pressure Available:	1.86 PSI

IRRIGATION SPECIFICATIONS

1. IRRIGATION POINT OF CONNECTION SHALL BE CAPABLE OF DELIVERING A VARIABLE FLOW RATE OF 15 GPM AT A CONSTANT PRESSURE OF 55 PSI DOWNSTREAM OF BACKFLOW PREVENTION DEVICE.POINT OF CONNECTION SHELL BE ABLE TO MAINTAIN THE MAXIMUM FLOW RATE AND PRESSURE FOR THE DURATION OF AN IRRIGATION CYCLE. CONTRACTOR SHALL VERIFY THESE PARAMETERS PRIOR TO CONSTRUCTION, AND NOTIFY OWNER'S REPRESENTATIVE AND IRRIGATION CONSULTANT IF THEY CANNOT BE MET.
2. IF THE POINT OF CONNECTION EXCEEDS THE ABOVE PRESSURE REQUIREMENTS, A PRESSURE REGULATOR SHALL BE INSTALLED AT THE OWNER'S EXPENSE. PRESSURE REGULATOR SHALL BE SET AT THE PRESSURE RECOMMENED ABOVE.
3. AN PVB TYPE BACKFLOW PREVENTION DEVICE SHALL BE INSTALLED IN A MANNER SATISFYING LOCAL CODES AND MANUFACTURER'S RECOMMENDATIONS.
4. POWER FOR THE IRRIGATION CONTROLLER, PUMP AND OTHER ELECTRICAL COMPONENTS SHALL BE PROVIDED BY OTHER. CONTRACTOR SHALL VERIFY POWER AVAILABLE MEETS THE REQUIREMENTS OF THE COMPONENT'S MANUFACTURER. IF POWER AVAILABLE IS INADEQUATE, CONTRACTOR SHALL NOTIFY THE OWNER'S REPRESENTATIVE PRIOR TO CONSTRUCTION.
5. IRRIGATION SYSTEM IS DISPLAYED SCHEMATIC IN NATURE. MINOR FIELD ADJUSTMENTS MAY BE NECESSARY TO ACCOMMODATE FOR LANDSCAPING CHANGES, PLANTING BEDS OR OTHER OBSTRUCTIONS. THESE ADJUSTMENTS MAY BE MADE ONLY AFTER NOTIFYING THE OWNER'S REPRESENTATIVE.
6. SOME IRRIGATION COMPONENTS AND PIPING ARE SHOWN IN HARDSCAPE AREAS AND OUTSIDE OF PROPERTY LINES TO IMPROVE ON THE READABILITY OF THE IRRIGATION PLAN. ALL COMPONENTS AND PIPING SHALL BE INSTALLED INSIDE OF THE PROPERTY LINES AND OUTSIDE OF HARDSCAPE AREAS.
7. MAINLINE, LATERALS AND CONTROL WIRES SHALL BE INSTALLED INSIDE THE SAME TRENCH WHENEVER POSSIBLE..
8. SYSTEM TO BE INSTALLED PER MANUFACTURER'S SPECIFICATIONS.
9. CONTROLLER SHALL BE GROUNDED PER MANUFACTURER'S SPECIFICATIONS.
10. ALL CONTROLLER/VALVE WIRE SHALL BE #14 GAUGE. THE COMMON WIRE SHALL BE COLORED WHITE, WHILE THE STATION WIRES SHALL BE OF AT LEAST ONE COLOR OTHER THAN WHITE.
11. ALL FIELD WIRE ABOVE GRADE OR WITHIN STRUCTURE TO BE INSTALLED IN CONDUIT PER LOCAL CODE.
12. ALL UNDERGROUND SPLICES TO UTILIZE 3M DBY, OR KING WATER PROOF SPLICE KITS, DEPENDING ON NUMBER AND SIZE OF WIRES. ALL SPLICES SHALL BE MADE INSIDE A VALVE BOX.
13. DEPTH OF IRRIGATION PIPING;18" ON MAINLINE; 12" ON LATERALS.
14. SLEEVING UNDER PAVED AREAS SHALL BE INSTALLED AT A DEPTH OF 24".

VALVE SCHEDULE

NUMBER	MODEL	SIZE	TYPE	GPM	HEADS	PIPE	DESIGN PSI	FRICTION LOSS	VALVE LOSS	PSI	PSI @ POC	PRECIP
1	Rain Bird XCZ-100-PRF	1"	Area for Dripline	12.69	1,904 l.f.	372.5	30	1.6	13.7	45.3	50.1	0.43 in/h
2	Rain Bird PGA Globe	1"	Bubbler	11	22	500.8	30	4.38	5.91	40.3	44.9	2.13 in/h

Project Name :
BATES ALLEN PARK
BLACK COWBOY MUSEUM
CHARLIE ROBERTS LANE
EAST BERNARD,TX

Customer Name :

Design Date: 10/07/24

REVISIONS

Description	Date
1	
2	
3	
4	
5	
6	

Drawing Title:
Irrigation Details

Drawing Scale: N.T.S

Project Number: 0000000

Sheet Number:
IR-DETAILS

STRUCTURAL GENERAL NOTES

I. COORDINATION

A. It is the responsibility of the General Contractor to obtain all Contract Documents and Addenda and to submit such documents to all subcontractors and material suppliers prior to the submittal of shop drawings, fabrication of any structural members, and construction.

B. The General Contractor shall compare the Architectural, Structural Mechanical, Electrical, Plumbing, and other series drawings and report any discrepancies between each set of drawings and within each set of drawings prior to fabrication and installation of any structural members.

C. Only larger sleeve openings and framed openings in structural framing component members are indicated on the Structural Drawings. However, all sleeves, inserts and openings, including frames and/or sleeves shall be provided for passage, provision and/or incorporation of the work of the contract, including but not limited to Mechanical, Electrical and Plumbing work. This work shall include the coordination of sizes, alignment, dimensions, position, locations, elevations and grades as required to serve the intended purpose. Openings not indicated on the Structural Drawings, but required as noted above, shall be submitted to the Engineer for review.

D. Refer to Architectural, Mechanical, Electrical and Plumbing drawings for floor elevations, slopes, drains and location of depressed and elevated floor areas.

E. Compatibility of the structure and provisions for building equipment supported on or from structural components shall be verified as to size, dimensions, clearances, accessibility, weights and reaction with the equipment for which the structure has been designed prior to submission of shop drawings and data for each piece of equipment and for structural components. Differences shall be noted on the submittals.

F. The details designated as "Typical Details" apply generally to the Drawings in all areas where conditions are similar to those described in the details.

G. All structural elements of the project have been designed by the Structural Engineer to resist the required code vertical and lateral forces that could occur in the final completed structure only. It is the responsibility of the Contractor to provide all required bracing during construction to maintain the stability and safety of all structural elements during the construction process until the lateral–load resisting or stability–providing system is completely installed and the structure is completely tied together.

H. Lateral–Force Resisting System: The ability of the structural frame to resist lateral loads and provide stability under gravity loads derives from the complete installation of the lateral–force resisting systems and diaphragms described below. It shall be the Contractor's responsibility to provide all temporary bracing required to maintain the stability and safety of all elements during the construction process until all of these elements are completely installed and all designated concrete elements (if any) have reach a minimum of 75% of their design strength. The temporary supports shall not result in the overstress or damage of the elements to be braced nor any elements used as brace supports. The required structural elements are:

1. Rigid Moment Frames and or X–Braces.
   a. Rigid Moment Frames and X–Braces attached to the structure by means of X–Roof Bracing.
   b. Horizontal Lateral–force Resisting System (Diaphragm)
      i. At the roof a series of X–Braces in the roof that attaches Portal Frames on opposite faces of Building together according to the metal Building Drawings and that creates an element linking the lateral–load resisting system to all columns.

I. The Contract Structural Drawings and Specifications represent the finished structure, and except where specifically shown, do not indicate the means or methods of construction.The Contractor and their Sub–Contractors shall supervise and direct the Work and shall be solely responsible for all construction means, methods, procedures, techniques, sequences and safety measures including, but not limited to, adherences to all OSHA guidelines.The Engineer shall not have control of, and shall not be responsible for, construction means, methods, techniques, sequences or procedures, for safety precautions and programs in connection with the Work, for the acts or omissions of the Contractor, Subcontractors, or any other person performing any of the Work, or for the failure of any of these persons to carry out the Work in accordance with the Contract Documents.

J. Where conflict exists among the various parts of the structural contract documents, structural drawings, general notes, and specifications, the strictest requirements, as indicated by the Engineer, shall govern.

K. Periodic site observation by field representatives of Garza + McLain Structural Engineers, Inc.is solely for the purpose of determining if the Work is proceeding in accordance with the Structural Contract Documents. This limited site observation is not intended to be a check of the quality or quantity of the Work, but rather a periodic check in an effort to inform the Owner against defects and deficiencies in the work of the Contractor.

II. SUBSTITUTIONS

All requests for substitutions of materials or details shown in the contract documents shall be submitted for approval during the bidding period. Once bids are accepted, proposed substitutions will be considered only when they are officially submitted with an identified savings to be deducted from the contract and/or schedule impact and the material or product has been approved by the International Code Council Evaluation Service (ICCES) and / or TDI and the ICCES reports and or TDI Certifications are included in the request. Submittals not satisfying the above criteria will not be considered.

III. MAINTENANCE STATEMENT

A. All structures require periodic maintenance to extend lifespan and to insure structural integrity from exposure to the environment. A planned program of maintenance shall be established by the building owner. This program shall include such items as but not limited to painting of structural steel, protective coating for concrete, sealants, caulked joints, expansion joints, control joints, spalls and cracks in concrete, pressure washing of exposed structural elements exposed to a salt environment or other harsh chemicals and maintaining positive drainage away from the edge of the building.

B. Site Drainage: it is recommended that the site drainage be well developed surface water should be directed away from the foundation soils. (Use a minimum slope of 5% within 10 feet of the foundation). no ponding of surface water shall be allowed near the structure during or after completion of the construction & the landscaping. the Contractor shall advise the owner of the site drainage requirements. The Engineer is not liable for foundation issues if the site is not maintained.

IV. CODES

A. The General Building Code used as the basis for the structural design is as follows:
1. International Building Code, 2015 Edition with Fort Bend County Amendments.

B. Structural Concrete: Building Code Requirements for Reinforced Concrete, American Concrete Institute, ACI 318.

C. Light Gauge Steel: Specifications for the design of cold–formed steel Structural members American Iron and steel Institute, Latest ed.

D. Structural Steel: Manual of Steel Construction, American Institute of Steel Construction, Latest Edition.

V. DESIGN LOADS

A. Dead Loads include the self weight of the structural elements and the following superimposed loads:

1. Collateral 5 psf

B. Live Loads

OCCUPANCY OR USE	UNIFORM (psf)	CONCENTRATED (lbs)
1. Roof (Reducible)	20	N/A
2. Mechanical	125	
3. Level 2	85	
4. Stairs	100	300

C. Wind loads
Wind lateral load on structural frame is based on ASCE 7–10 using the following:

1. Basic Wind Speed (3 sec, ultimate) 135 mph
2. Exposure C
3. Category II
4. Gross Wind Uplift on Roof Components and Cladding are as follows: (kd = 0.85)

Roof	10 sqft	100 sqft
1	–46.5	–38.6
2	–54.3	–46.5
3	–54.3	–46.5

5. Gross Wind Pressures on Wall Components and Cladding are as follows:

4	–50.4	–43.7
5	–67.2	–48.4

D. Texas Architectural Barrier Act Standard. The structural strength of grab bars, tub and shower seats, fasteners, and mounting devices shall meet the following specification:

1. Bending stress in a grab bar or seat induced by the maximum bending moment from the application of 250 lbf shall be less than the allowable stress for the material of the grab bar or seat.
2. Shear stress induced in a grab bar or seat by the application of 250 lbf shall be less than the allowable shear stress for the material of the grab bar or seat. If the connection between the grab bar or seat and its mounting bracket or other support is considered to be fully restrained, then direct and torsional shear stresses shall be totaled for the combined shear stress, which shall not exceed the allowable shear stress.
3. Shear force induced in a fastener or mounting device from the application of 250 lbf shall be less than the allowable lateral load of either the fastener or the mounting device or the supporting structure, whichever is the smaller allowable load.
4. Tensile force induced by a fastener by a direct tension force of 250 lbf plus the maximum moment from the application of 250 lbf shall be less than the allowable withdrawal load between the fastener and the supporting structure.
5. Grab bars shall not rotate within their fittings.

E. Handrails and Guardrails: Handrails and guardrails shall be designed for 50 pound/ft applied horizontally at right angles to the top rail as well as a 200 pound concentrated load applied in any direction at any point along the top rail. The railing shall have attachment devices to adequately anchor to the supporting structure. Intermediate rails (all except handrail), balusters, and panel fillers shall be designed to with stand a horizontally applied normal load of 50 lbs on an area not to exceed one square foot, including openings and space in between rails.

VI. SUBMITTALS

A. Shop drawings shall be prepared for all structural items and submitted for review by the Engineer. Contract Drawings shall not be reproduced and used as shop drawings. All items deviating from the Contract Drawings or from previously submitted shop drawings shall be clouded.

B. The contractor shall review shop drawings for compliance with the contract documents and shall certify that he has done so by a stamp noting that the drawings have been "Approved" and which bears the signature (or initials) of an authorized representative of the contractor and the date. Submittals which do not reflect the contractor's approval, signature and date will be returned without review.

C. The contractor shall be responsible for delays caused by rejection of inadequate shop drawings.

D. Where review and return of shop drawings is required or requested, the engineer will review each submittal and, where possible, return within two weeks of receipt.

E. Corrections or comments on shop drawings or manufacturer's data sheets do not relieve the contractor from compliance with requirements of the plans and specifications. The engineer's review is for general conformance with the requirements of the contract documents. The contractor is responsible for confirming and correcting all quantities and dimensions, selecting fabrication processes and techniques of construction, and coordinating his work with that of all other contractors.

F. General Contractor shall submit electrical PDFs of submittals. Engineer will review, comment and return electrical copy. General Contractor will be responsible for providing and distributing Engineers comments to their subcontractors.

G. Shop Drawings

1. The General Contractor shall submit for Engineer review shop drawings for the following items:
   a. Reinforcing Steel
   b. Penetrations in Grade Beams
   c. Concrete Mix Designs (30 Tests)
   d. Structural Steel
   e. CFMF
   f. Vapor Retarder.
   g. Roof Standing Seam panels
   h. Metal Roof Deck
   i. Floor Deck
   j. Steel Joists

   Items marked (*) shall be designed by an engineer and drawings shall be sealed by a registered engineer in the state where the project is located. Items marked (#) shall be submitted to Engineer for Owner's record only and will not have the Engineer's shop drawing stamp affixed.

2. The omission from the shop drawings of any material required by the Contract Documents to be furnished shall not relieve the Contractor of the responsibility of furnishing and installing such materials, regardless of whether the shop drawings have been reviewed and approved.

I. Manufacturers Literature – Submit two copies of manufacturer's literature for all materials and products used in the construction of the project.

J. Letters–
1. Steel erector shall provided letter stating all structural Frames and Components elements have been installed per the structural drawings and structural steel shop drawings without deviation.
2. Concrete Contractor shall provide a letter stating that the concrete reinforcing was installed per the contract documents.
3. G.C. to provide a letter to the Engineer stating all structural elements have been installed per the structural contract documents, shop drawings and supplemental sketches without deviation.

VII. CAST IN PLACE CONCRETE

A. CLASSES OF CONCRETE

All concrete shall conform to the requirements as specified in the table below unless noted otherwise on the drawings:

Concrete Mix Schedule:

Conc. Class	Strength psi	Agg. Type	Agg. Size	Slump Inches	Max w/c	Notes
A	3000	NWT	1 1/2"	5	----	
B	3000	NWT	3/8"	4	----	
C	3500	NWT	1 1/2"	4	0.45	

a) "NWT" refers to normal concrete having air dry unit weight of approximately 145 PCF (ASTM 33 aggregate).
b) Where w/c ratio is not indicated in the Concrete Mix Schedule, it shall be as necessary to meet strength requirements.
c) Where the w/c ratio is shown, it shall be adhered to regardless of strength requirements.
d) "Strength" is required compressive cylinder strength at an age of 28 days

Mix Usage Schedule:

Description of Use	Concrete Class	Air Content
Drilled Piers	A	-------
LEVEL 2	B	
Grade Beams		
Slab–on–Fill		

B. Maximum shrinkage of the concrete shall be 0.03% at 28 days as determined by ASTM C157.

C. Horizontal construction joints in concrete pours shall be permitted only where indicated on the drawings. All vertical construction joints shall be made in the center of spans in accordance with the typical details. Contractor shall submit proposed locations for construction joints not shown on drawings for review by the Architect and Structural Engineer. Additional construction joints may require additional reinforcing as specified by the Engineer which shall be provided by the contractor at no additional cost to the owner.

D. There shall be no embedded conduits, or pipes in the slab.

E. Embedded conduits, pipes, and sleeves shall meet the requirements of ACI 318–95, Section 6.3, including the following:

1. Conduits and pipes embedded within a wall, or beam (other than those passing through) shall not be larger in outside dimension than 1/3 the overall thickness of the slab, wall or beam in which they are embedded.
2. Conduits, pipes and sleeves shall not be spaced closer than three diameters or widths on center.
3. There shall be no conduits or pipes running within the slab thickness or beam.

VIII. CONCRETE REINFORCING

A. Concrete reinforcement for the project shall conform to the following:

1. All Reinforcing Steel shall be ASTM A615, Grade 60 unless noted otherwise in the drawings or these notes.
2. Welded Reinforcing Steel. Provide reinforcing steel conforming to ASTM A706.
3. Deformed Bar Anchors. ASTM A496 minimum yield strength 70,000 PSI as noted on the drawings. Reinforcing bars shall not be substituted for deformed bar anchors.
4. Welded wire reinforcement.Welded smooth wire reinforcement, ASTM A 185, yield strength 65,000 PSI where noted on the drawings. Welded deformed wire reinforcement, ASTM A 497, yield strength 70,000 PSI where noted on the drawings. Welded wire reinforcement to be provided in flat sheets.

B. Detailing of reinforcing steel shall conform to the American Concrete Institute 315 Detailing Manual and all hooks and bends in reinforcing bars shall conform to ACI detailing standards unless shown otherwise.

C. Placement of Welded Wire Reinforcement Wherever welded wire reinforcement is specified as reinforcement, it shall be continuous across the entire concrete surface and not interrupted by beams or girders and properly lapped one cross wire spacing plus 2".

D. Reinforcement in Housekeeping Pads Provide welded smooth wire reinforcement 6x6 W2.9 x W2.9 minimum in all housekeeping pads supporting mechanical equipment whether shown on the drawings or not unless heavier reinforcement is called for on the drawings.

E. In unscheduled grade beams, walls, and slabs, detail reinforcing as follows:

1. Class B Lap beam top reinforcing bars at mid span.
2. Class B Lap beam bottom reinforcing bars at the supports.
3. Provide Class B lap at other location pending Engineer's approval.
4. Provide standard hooks in top bars at cantilever and discontinuous ends of beams, walls and slabs.
5. Provide corner bars for all horizontal bars at the inside and outside faces of intersecting beams or walls. Corner bars are not required if horizontal bars are hooked.
6. Provide 2–#4 diagonal bars at all slab re–entrant corners placed under the top mat of steel.

F. Welding of reinforcing steel will not be permitted unless specifically shown on drawings.

G. Heat shall not be used in the fabrication or installation of reinforcement.

H. Reinforcing steel clear cover shall be as follows:

1. Drilled Piers	3" Sides
2. Earth Formed Beams	2" top, 3" sides, 3" bottom
3. Slab–on–fill	Centered
4. Pier Caps	1½" top, 3" sides, 3" bottom

I. Concrete Reinforcement subcontractor shall provide an allowance for one ton of concrete reinforcement to be furnished and installed as directed per engineer/TDI inspector. If Reinforcing steel is not used during the progress of the project, the owner shall receive a credit for the portion not used.

IX. TESTING LABORATORY SERVICES

A. Work specified herein shall be performed by a qualified Independent Testing Laboratory, selected and paid by the Owner. The Contractor shall be responsible for notifying the Independent Testing Laboratory at least 24 hours of advance of materials that require testing. The contractor shall pay for all retests of materials not meeting the requirements in the Contract Documents. Reports of each Test shall be prepared by the Independent Testing Laboratory and submitted promptly to the Owner, Contractor, Architect, and Engineer. Items found not to comply with the Construction Documents shall be brought to the immediate attention of the Contractor and Architect/ Engineer for resolution.

B. Drilled pier drilling operation: Make continuous inspections to determine that the proper bearing stratum is obtained and utilized for bearing and that the shafts are clean and dry before pouring concrete. Provide reports of all pertinent data as shown in ACI 336.

C. Earthwork operation:

1. Analyze backfill samples delivered by the contractor to determine compliance with gradation and quality requirements of the geotechnical report.
2. Make in place compaction test for moisture content, moisture density relationship, and density of materials in place. Perform one test for each 5000 square feet of area per lift.

D. Concrete and testing:

1. Secure composite samples of concrete at the jobsite in accordance with ASTM C172.
2. Mold and cure four specimens from each sample in accordance with ASTM C31. Test specimens in accordance with ASTM C39 for each pour of concrete.
3. Test one cylinder @ 7 days, 2 @ 28 days, and hold one for 56 days (test only if 28 day strength is low.)
4. Perform one strength test (four cylinders) for each 50 cubic yards of fraction thereof, of each mix design placed in one day. Test one cylinder @ 7 days, 2 @ 28 days, and hold one for 56 days (test only if 28 day strength is low.)
5. Make one slump test for each set of cylinders following the procedural requirements of ASTM C143 and C172.
6. Determine total air content of air entrained concrete in accordance with ASTM C231. Perform one test for each strength test.

E. Special Inspections: Special Inspections shall be performed in accordance with Chapter 17 of the 2015 IBC by a Special Inspector hired by the Owner to perform the Special Inspections listed below. The Special Inspector shall be qualified by an approved agency according to the City to perform the special inspections for which they will be undertaking. The Contractor shall coordinate with and notify the Special Inspector of all tests. The Special Inspector shall be responsible to verify that the items detailed in the Construction Documents were built accordingly and shall prepare, sign, and submit reports to the Registered Design Professional (RDPIRC) in Responsible Charge for all time spent at the site and shall notify the General Contractor responsible for the quality of the Project of the non–complying items. These Special inspections are in addition to other listed in these Structural Notes, or Project Specifications, or TDI inspections.

1. Steel Construction
   a. High strength bolted connections
      i. Periodic visual inspection of identification markings to conform to ASTM standards specified in the approved construction documents
      ii. Periodic visual inspection of high strength bolted connections
      iii. Periodic inspection of bearing–type connections
      iv. Continuous inspection of slip critical connections
   b. Material verification of structural steel
      i. Periodic visual inspection of identification markings to conform to ASTM standards specified in the approved construction documents
   c. Material verification of weld filler materials
      i. Periodic visual inspection of identification markings to conform to AWS specification in the approved construction documents
   d. Inspection of welding
      i. Structural Steel
         1. Continuous non–destructive testing of complete and partial penetration groove welds
         2. Continuous inspection of multipass fillet welds
         3. Continuous inspection of single–pass fillet welds greater than 5/16"
         4. Periodic inspection of single–pass fillet welds less than or equal to 5/16"
         5. Periodic inspection of floor and deck welds
      ii. Reinforcing Steel
         1. Periodic verification of weldability of reinforcing steel other than ASTM A706
         2. Continuous inspection of welding of reinforcing steel resisting flexural and axial forces in intermediate and special moment resisting frames, and boundary elements of special reinforced concrete shear walls and shear reinforcement
         3. Continuous inspection of welding of all shear reinforcement
         4. Periodic inspection of welding of all other steel reinforcement
   e. Inspection of steel frame joint details for compliance with approved construction documents including:
      i. Details such as bracing and stiffening
      ii. Member locations
      iii. Application of joint details at each location
   f. Continuous Inspection of Grouting Under base plates.
2. Concrete Construction
   a. Continuous inspection of embedded structural items installed in concrete prior to and during placement of concrete
   b. Continuous verification of use of approved concrete design mix and that the mix is not altered at the site (excluding the addition of any mixing water withheld at the plant).
   c. At the time fresh concrete is sampled to fabricate specimens for strength tests, perform slump and air content tests, and determine the temperature of the concrete
   d. Continuous inspection of concrete placement for proper application techniques
   e. Periodic inspection for maintenance of specified curing temperature and techniques
   f. Periodic inspection of the erection of tilt wall concrete members
3. Concrete Reinforcement: Inspect all concrete reinforcing steel and embedded metal assemblies prior to placement of concrete compliance with Contract Documents and shop drawings. All instances of non–compliance shall be immediately brought to the attention of the contractor for correction, and if uncorrected, reported to the engineer.
4. Post–installed Anchors: Provide continuous inspection of post–installed anchoring installation to ensure that holes are of the specified size, and that bolts are properly installed including application of minimum installation torques.

Special Inspection Report, upon completion of the erection of the structure; submit a final report to the owner that includes all the daily inspection reports, testing reports and special inspector qualifications.

X. DRILLED PIERS

A. Pier design is in accordance with the recommendations in the following Design geotechnical report:
   a. Geotechnical Engineer: HTS, Inc.
   b. Date of report: May 17, 2024
   c. Report number: 24–5–217

B. Pier design based on straight sided drilled shaft ultimate axial capacity in compression curves provided on plate F–1.

C. Footings not specifically located on the plan shall be located on centerline of column above. Where no column occurs, locate on centerline of wall or beam.

D. Provide dowels from Shafts into concrete above using same bar size and number as shown for pilaster above. Where no pilaster occurs, use dowels of same size and number as shaft reinforcing steel. Extend dowels 36 bar diameters into beam, wall, pilaster or column u.n.o.

E. Elevation of top of Shafts, unless noted otherwise on the drawings is at the bottom of the deepest intersecting beam or wall supported by the pier.

F. Reinforcing cage shall be held securely away from earth at sides and bottom by sets of 3 spacers at a maximum spacing of 8_ft. along the length of the cage and 1'–0" from the bottom.

G. Shaft reinforcing and concrete shall be placed immediately after drilling operations are complete; in no case shall a pier be drilled that cannot be poured by the end of the workday.

H. See plans and details for pier diameter, reinforcing and depth.

I. Reinforcing steel shop drawings shall include placing drawings for templates to set dowels in Shafts

J. Top of Pier shall be of the specified diameter. Form top of shaft required to maintain the specified diameter. Any concrete extending beyond the specified diameter shall be removed.

K. Temporary steel casing may be required during shaft drilling operations. Refer to Geotechnical Report. Prior to the placement of concrete, any seepage water shall be removed from the pier holes. Special construction procedures in accordance with ACI 336.1–89 and ACI 336.3R–89 and specifications shall be followed during extraction of the casing and during concrete placement.

L. All Footings shall be inspected by a representative of the testing laboratory in order to ensure that the proposed bearing material has been reached in accordance with the recommendations given in the geotechnical report.

M. The contractor and Geotechnical Engineer shall make and maintain accurate records of the drilled Shaft depths, bearing stratum, depth of penetration into bearing stratum, diameter and location (including off center eccentricities), Footing Under–reamed and shall submit this information to the Engineer.

XI. BUILDING PAD SUBGRADE PREPARATION

Site improvements within the building footprint shall be per the geotechnical report to reduce PVR to 1".

VCS architects
19251 Purus Dr.
Porter, TX 77365

CONSULTANTS

Garza + McLain
www.garza-mclain.com STRUCTURAL ENGINEERS, INC.
13313 Southwest Freeway, Suite 163
Sugar Land, Texas 77478
(281) 494-1230 (voice)
(281) 494-1234 (fax)
FIRM NO.: F-9331
EXPIRATION: 5-31-2025
JOB NO.: 220170

BATES ALLEN PARK
BLACK COWBOY MUSEUM
CHARLIE ROBERTS LANE

STATE OF TEXAS
GABRIEL GARZA
90960
LICENSED
STRUCTURAL ENGINEER
06-03-24

Drawing Date: 06/03/2024
Drawn By: SMA
Checked By: DDV
Scale: AS NOTED

Revisions:

DESCRIPTION	
100% CD'S	06/03/2024

Drawing Name

STRUCTURAL GENERAL NOTES

S0.01

STRUCTURAL GENERAL NOTES

A. Building pad preparation information must be based on the recommendations in the geotechnical report and it is the Contractor's responsibility to follow the geotechnical recommendations without deviation.
B. Plug all utility trenches entering and existing the building per the requirements outlined in the geotechnical report.

XII. VAPOR RETARDER

A. Provide a Vapor Retarder that conforms to ASTM E1745, Class A, with a maximum water vapor permeance of 0.008 perms per ASTM E96. Moisture retarder shall be no less than 15 mills thick.

XIII. STRUCTURAL STEEL CONNECTIONS

A. Base Plates

1. Column base plates shall be set to the elevation indicated on the drawings and leveled using shims or by double nuts on anchor bolts. Base plates shall then be grouted with a non-shrink, high strength nonmetallic grout. Tighten anchor bolts after supported members have been positioned and plumbed.
2. Hole sizes in base plates may be oversized; However washers per AISC table 14-2 are required.

B. All anchor bolts shall conform to ASTM 1554 Grade 55 U.N.O. supplement 2

C. Welded Connections

1. All welding shall conform to ANSI/AWS D1.1, latest edition.
2. Fillet welds with no size specified shall be 3/16" or minimum size required by AISC, whichever is larger.

D. Unless noted otherwise on the drawings, Bolts shall be 3/4" diameter and conform to ASTM A325. Bolts shall be designed using values for bearing type bolts with thread allowed in the shear plane.

1. Bolts shall be tightened to "snug tight" as defined by AISC U.N.O.

E. Structural steel connections not specifically detailed on the Drawings shall be designed and detailed by the Contractor under the direct supervision of the registered engineer licensed in the State of Texas. Sealed calculations for all connections designed by the Contractor shall be submitted with steel shop drawings where connections are not designed as specified G+M shall mark up shop dwgs and fabricator shall revise shop dwgs at no cost to owner.

F. Beam connections shall be detailed as follows, unless noted otherwise on the Drawings:

1. Connections shall be AISC type 2 simple framing connections. Shear tab connections shall not be used.
2. In general, shop connections shall be bolted or welded and field connections shall be bolted.
3. The minimum number of rows of bolts shall be 1/6 of the beam depth with any fraction be rounded to the next higher number.
4. Bolts shall be "snug tight", U.N.O..
5. Short slotted holes shall be permitted provided washers are installed in accordance with AISC requirements. Washers shall be hardened where A325 bolts are utilized.

G. For connections not specifically addressed by these notes or the Drawings, provide fillet welds at all contact surfaces sufficient to develop the tensile strength of the smaller member at the joint.

H. All Electrode for welding Structural steel members shall conform to E70XX.

XIV. STRUCTURAL STEEL

A. Material

1. All hot rolled steel members shall be new and conform to ASTM specification A6.
2. ASTM Specification and Grade. Clearly mark the grade on each member.
3. Unless noted otherwise structural steel members shall be:

a. W-shapes shall conform to ASTM A992. ASTM A572 Grade 50 may be substituted for A992.
b. Angles shall conform to ASTM A36.
c. Square or rectangular hollow structural shape members shall conform to ASTM A500 Grade B, Fy = 46ksi.
d. Structural steel plate shall conform to ASTM A36 U.N.O.
e. Miscellaneous steel elements for Brace connections including but not limited to gusset plates, stiffeners, transfer plates, etc. shall conform to ASTM A572 Grade 50, Fy=50ksi.
f. Channels shall conform to ASTM A36.

B. Fabrication

1. Fabricate and assemble structural assemblies in shop to greatest extent possible.
2. Dimensional tolerances of fabricated structural steel shall conform to Section 6.4 of the AISC Code of Standard Practice unless noted otherwise.
3. Splicing of structural steel members is prohibited without prior approval of the Engineer as to location and type of splice to be made. Any member having splice not shown and detailed on shop drawings will be rejected.
4. Shop painting: Paint structural steel with one coat of manufacturer's standard water based primer applied at a rate to provide a uniform dry film thickness of 2.5 mils.
5. All hollow Structural shapes shall have fitted end caps.

C. Erection

1. Erection tolerance of anchor bolts, embedded items, and all structural steel unless specified otherwise on the drawings shall conform to the AISC Code of Standard Practice.
2. Field cutting of structural steel or any field modifications to structural steel shall not be made without prior approval of the Engineer.
3. Contractor shall protect any unprimed structural steel from detrimental effects of corrosion, as required, until the steel is enclosed and protected by the new construction.

D. Hot Dip galvanize after fabrication all structural steel items and connections permanently exposed to the outside, whether specified on the drawings or not. Such items include, but are not limited to:

1. Shelf angles
2. All embedded plates in concrete Exposed to Weather
3. Building cladding support steel in space not air conditioned and/or exposed to moisture outside the exterior waterproofing surface if any.
4. Examine the architectural and structural drawings for other items required to be hot dipped galvanized. Galvanize all nuts, bolts, and washers used in connection with such steel. Field welded connections shall have welds protected with "Z.R.C. Cold Galvanizing Compound" as manufactured by Z.R.C. Company.

E. Contractor shall coordinate structural steel fireproofing requirements. All interior structural steel, including steel joists, scheduled or indicated to receive spray applied fireproofing shall be delivered to the project site unprimed. Steel exposed to corrosive conditions after installation shall be primed with a protective coating which does not diminish the bond between the spray applied fireproofing, and the steel substrate. Any primer, and/or coating applied to structural steel shall be approved for use in the applicable U.L. Fire Resistance Assembly used on the project.

XV. LIGHT GAUGE METAL STRUCTURAL MEMBERS

A. All studs and runner tracks shall be formed from steel that corresponds to the minimum requirements of AISI Standards, Latest Edition.

B. Physical properties and allowable load capacities of members shall be developed in accordance with the latest edition of the AISI "Specification for the Design of Cold-Formed Steel Structural Members."

C. Cutting of light gage steel members shall be performed with a saw. Torch cutting shall not be permitted.

D. Holes that are field cut through light gage members shall be made with the limitations of the product design and shall be reinforced as recommended by the manufacturer.

E. Horizontal bracing for walls shall be provided at 4 ft o.c. maximum in accordance with the typical details.

F. All power actuated fasteners shall be 0.157" diamter X-U fasteners as manufactured by Hilti with an embedment equal to 1¼ inches unless noted otherwise.

G. Place a continuous runner at the bottom and top of all stud walls. Bottom runner shall be connected to support member with one P.A.F. at a maximum spacing of 16" o.c. unless noted otherwise.

H. Product Identification

1. All material 16 Ga or less shall meet the requirements of ASTM A653 with minimum yield strength of 33 KSI unless noted otherwise, 14 Ga material shall have a minimum yield stress of 50 ksi.

2. All galvanized material to meet the requirements of ASTM A525 with a minimum G60 coating.

3. Fastening of components shall eb with #10 or #12 self tapping screws.

4. Installation of studs shall eb as per Metal Lath/Steel Framing Association - Light Weight Steel Framing Systems Manual, ASTM C955, ASTM C1007 and Project Specifications.

5. Minimum 12" unpunched steel required at both ends of members.

6. Thicknesses
18 GA = 0.0451"
16 GA = 0.0566"
14 GA = 0.0713"
12 GA = 0.1017"

I. Stud

1. Use three studs of the corner of all exterior walls.
2. Ends of studs must seat firmly in runner track which must have full bearing on structure.
3. Attach each runner track leg to each stud flange with one #10-16 screw or #12 screw.
4. No notching or coping of stud is allowed.
5. All light gage steel wall studs shall be full height or span to supports with no splices in stud unless detailed otherwise.
6. All horizontal bracing shall be installed at the time the wall is erected.
7. All multiple studs attach together with 2-#12 TEK screws @ 12"o.c. vertically no exceptions.

J. Attachments

1. Use #10-16 screws for steel to steel connections except as noted on plans and 1 details.
2. A ¾" (minimum) clearance must be maintained from all edges of steel members in locating screws. A ¾" (minimum) on center spacing must be maintained between adjacent screws.
3. For attachment of single layer ⅝" Dens Glass Sheathing to steel studs, use 1¼" long #6-18 bugle head screws. 6"o.c. at panel edges and in the field typical. At the back side of parapets use 1¼", #6 screws @ 4"o.c. edges and at field.

K. System Components

1. Slide clips are used for curtain wall conditions to accommodate vertical movement of structure, Slide clips are attached with powder actuated fasteners (see details), and shall confirm to the Steel Network, Inc. (888)-474-4876

L. Headers

XVI. OPEN WEB JOISTS

A. Open Web Joists shall conform to the Standard Specifications of the Steel Joist Institute (SJI). Chords of joist shall be angles or tees steel shall be fabricated from domestic steel.

B. Provide bridging in accordance with SJI specifications and OSHA Standard 29CFR-1926.751(C)2. Bridging shall be continuous through structural steel members, and shall be anchored to spandrel members or walls. Provide additional bridging where required for uplift.

C. Joist manufacturer shall design bottom chords of all open web joist to support a 50 lb load located anywhere along the length of the chord.

D. Hangers for mechanical equipment with reactions in excess of 50 lbs must be located at the panel points of the joists. Provide joist reinforcing in accordance with the typical details where hanger are required to be located more than 3" from the joist panel points.

E. All joists shall be inspected and certified by an independent testing laboratory to meet the weld requirements as follows:

1. The weld has no cracks.
2. Thorough fusing exists between adjacent layers of weld metal and between weld metal and the based metal at the welded connection.
3. All craters are filled to the full cross section of the weld joint.
4. All weld profiled shall be reasonably uniform. It is recognized that all web joint welds will not have a perfect profiled, however, the effective throat and penetration shall be equal to the throat required by the design drawings. Visual inspection of the welds shall be made to confirm that unequal legs, excessive convexity, or overlap conditions do not detract from the effective throat of the weld.
5. Undercutting of welds is undesirable but is acceptable if the depth of undercutting does not exceed 1/32". Welds that have undercutting in excess of 1/32" shall be repaired and reinspected.
6. Any cluster of surface porosity in the weld area is to be removed and replaced with sound weld metal.
7. The surface of the shop welds shall be reasonably clean prior to the inspection.
8. All repair procedures shall be in accordance with AWS D1.1 Contractor shall bear the cost for all reinspeciton. Results of the inspection shall be provided to the Structural Engineer prior to shipment of joists.

F. Provide flat bearing for all joist. Bear joists on supports in accordance with SJI specifications.

G. Joists shall be connected to their supports in accordance with SJI specifications and/or with a 1/8"-inch fillet along the entire length the joist seat each side typical.

H. Shop painting: Joists shall receive one coat of fabricator's standard primer.

I. Joist sizes specified have been sized for ASD load combinations considering a 10 psf downward and pressure.

XVI METAL DECKS

A. Metal Roof Deck

1. Metal Roof Deck Schedule:

Location	SDI Deck Gauge	Deck Deck Type	Sheet Depth (In.)	Min. Width (In.)	Min. Ix (In.4)	Min. Sp (In.3)	Sn (In.3)
Roof	22	WR	1.5	36	0.155	0.186	0.192

Sp = positive section modulus in3
Sn = negative section modulus in3
Ix = moment of inertia

2. Roof deck shall be galvanized.
3. Sheet steel for galvanized roof deck and accessories shall conform to ASTM A653-94, Structural Quality, with a minimum yield strength of 33 ksi. Galvanizing shall conform to ASTM A924-94 with a minimum coating of G90 as defined in A653-94.
4. Roof deck shall be continuous over four or more supports.
5. Place deck panels on structural supports and adjust to final position with ends lapped 2 inches over structural supports. Provide minimum end bearing of 2 inches.
6. Roof deck connections shall be as follows:

Support Location	Connx Pattern	Support Fastener	Sidelap Fastener/ No per Span.
Roof	36/7	#12 TEK	9-#10 TEK

PW=Puddle Welds, TS=Tek Screw
HILTI FASTENER= Hilti X-ENP-19 L15 Fastener.

See plans for "a" dimension and Interior Fields, Perimeter Band, Ridge Band, and Corner Zones wind loads.

a. At interior supports: Weld @12"o.c. (U.N.O)
b. At perimeter supports: Puddle welds at 6" on center. (U.N.O)
c. at corners puddle welds @6"o.c. (U.N.O)

7. Power driven fasteners shall be selected by the contractor for the combinations of deck gauge and deck support member thickness. Submit proposed fasteners with complete manufacturer's information, including diaphragm shear values for Engineer's review.
8. Mechanical, electrical & plumbing systems shall not be supported by the metal roof deck.

B. Form Deck

1. Metal Roof Deck Schedule

Location	Dense Depth	Gauge	Concrete Type	Section Sp	Sn	Properties Ip	In
Floor	1.0	24	NWT	0.098	0.103	0.057	0.059

Sp = positive section modulus in3
Sn = negative section modulus in3
Ip = moment of inertia
In = negative moment of inertia

2. Sheet steel for galvanized floor deck and accessories shall conform to ASTM A653-94, Structural Quality, with a minimum yield strength of 33 ksi. Galvanizing shall conform to ASTM A924-94 with a minimum coating of G60 as defined in A653-94.
3. Place deck panels on structural supports and adjust to final position with ends lapped 2 inches over structural supports. Lap sides of deck 1 corrugation. Provide minimum end bearing of 2 inches.
4. Attach form deck to members with puddle welds with washers on a 33/4 pattern with 2-#10 TEK screw side lap fasteners.
5. Do not use admixtures with chloride salts in concrete for slabs over metal deck,

architects
19251 Purus Dr.
Porter, TX 77365

CONSULTANTS
Garza + McLain
www.garza-mclain.com STRUCTURAL ENGINEERS, INC.
13313 Southwest Freeway, Suite 163
Sugar Land, Texas 77478
(281) 494-1230 (voice)
(281) 494-1234 (fax)
FIRM NO.: F-9331
EXPIRATION: 5-31-2025
JOB NO.: 220170

BATES ALLEN PARK
BLACK COWBOY MUSEUM
CHARLIE ROBERTS LANE

STATE OF TEXAS
GABRIEL GARZA
90960
LICENSED
PROFESSIONAL ENGINEER
06-03-24

Drawing Date: 06/03/2024
Drawn By: SMA
Checked By: DDV
Scale: AS NOTED

Revisions:

DESCRIPTION	
100% CD'S	06/03/2024

Drawing Name

STRUCTURAL GENERAL NOTES

S0.02

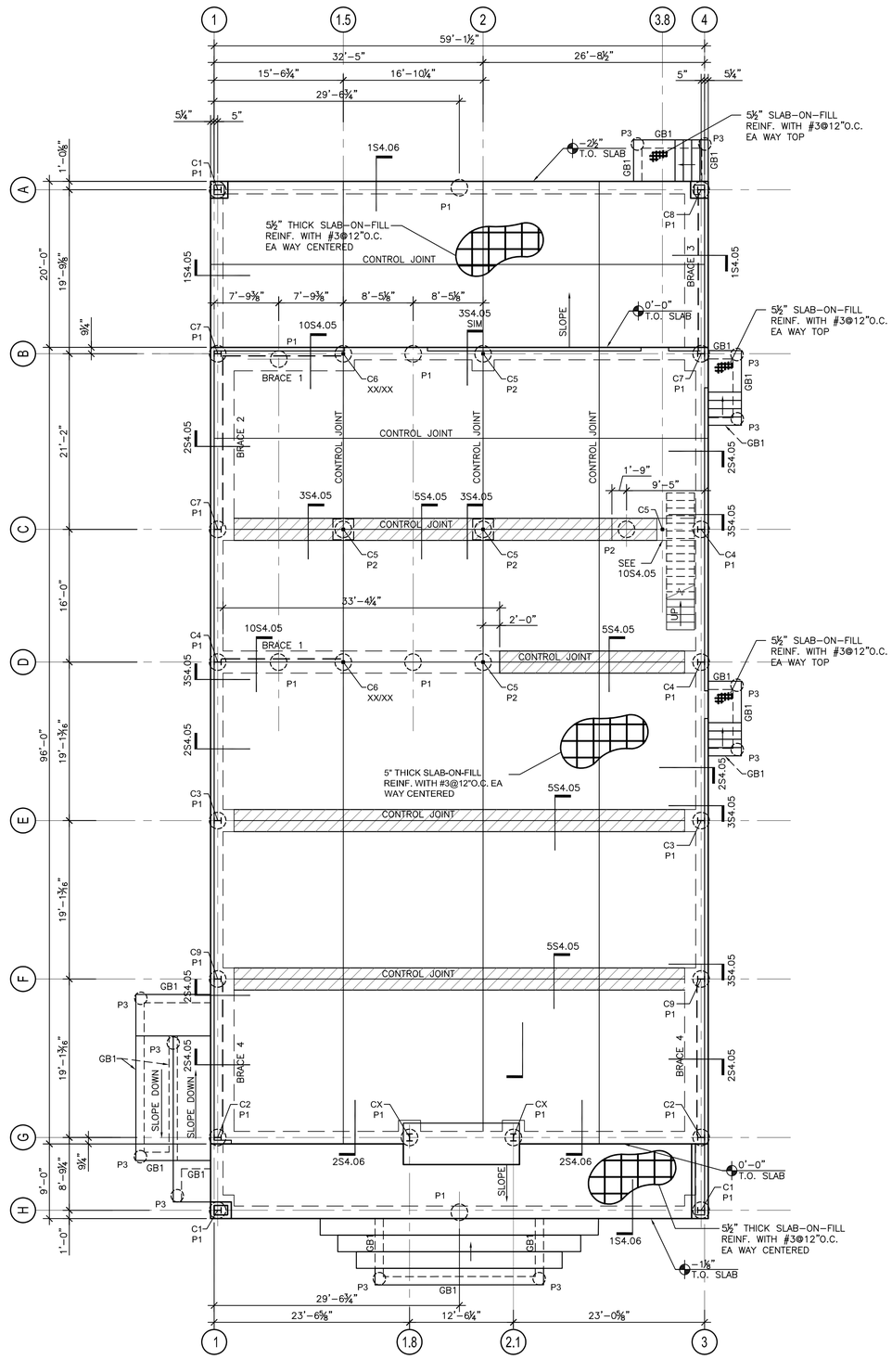

PLAN NOTES:

1. REFERENCE FINISH FLOOR ELEVATION = 0'-0" UNLESS NOTED OTHERWISE, REFER TO CIVIL DRAWINGS FOR MEAN SEA LEVEL ELEVATION.
2. CENTERLINES OF DRILLED AND REAM FOOTINGS NOT SPECIFICALLY LOCATED ON PLAN BY NOTE OR DIMENSION SHALL BE LOCATED AS FOLLOWS:
   A. SUPPORTING FREESTANDING COLUMNS: CENTERLINES OF COLUMN.
   B. SUPPORTING GRADE BEAMS: CENTER LINE OF GRADE BEAM IN ONE DIRECTION, GRID OR AS NOTED IN OTHER DIRECTION. AT CORNER CONDITIONS: CENTER LINES OF GRADE BEAMS.
   C. SUPPORTING WALLS: CENTER LINE OF WALL IN ONE DIRECTION, AT CORNER CONDITIONS: LINES AT WALLS
3. NOTATION THUS: 0'-9" INDICATES TOP OF CONCRETE
4. REFER TO S4.1 TO S4.3 SHEETS FOR TYPICAL FOUNDATION DETAILS.
5. REFER TO STRUCTURAL GENERAL NOTES FOR ADDITIONAL INFORMATION.
6. C.J. DENOTES CONTROL JOINT, SEE 6S4.0.
7. REFER TO METAL BUILDING DRAWINGS FOR ALL COLUMN INFORMATION.
8. DRILLED AND UNDERREAMED FOOTINGS ARE NOTED ON PLAN AS THUS: XX/XX — UNDERREAMED FOOTING; SHAFT DIA.
9. NOTATION THUS: GB1 INDICATES A 16" WIDE x 21" DEEP GRADE BEAM REINF. WITH (2)-#6 CONT TOP AND BOTTOM WITH #3S2@8"O.C.

PIER SCHEDULE		
MARK	DIAMETER	LENGTH
P1	24"ø	20'-0"
P2	24"ø	16'-0"
P3	18"ø	12'-0"

1 FOUNDATION PLAN

SCALE: 1/8" = 1'-0"

NORTH

architects

19251 Purus Dr.
Porter, TX 77365

CONSULTANTS

Garza + McLain
www.garza-mclain.com STRUCTURAL ENGINEERS, INC.
13313 Southwest Freeway, Suite 163
Sugar Land, Texas 77478
(281) 494-1230 (voice)
(281) 494-1234 (fax)
FIRM NO.: F-9331
EXPIRATION: 5-31-2025
JOB NO.: 220170

BATES ALLEN PARK
BLACK COWBOY MUSEUM
CHARLIE ROBERTS LANE

STATE OF TEXAS
GABRIEL GARZA
90960
LICENSED
PROFESSIONAL ENGINEER
06-03-24

Drawing Date: 06/03/2024
Drawn By: SMA
Checked By: DDV
Scale: AS NOTED

Revisions:

DESCRIPTION	
100% CD'S	06/03/2024

Drawing Name

FOUNDATION PLAN

S1.01

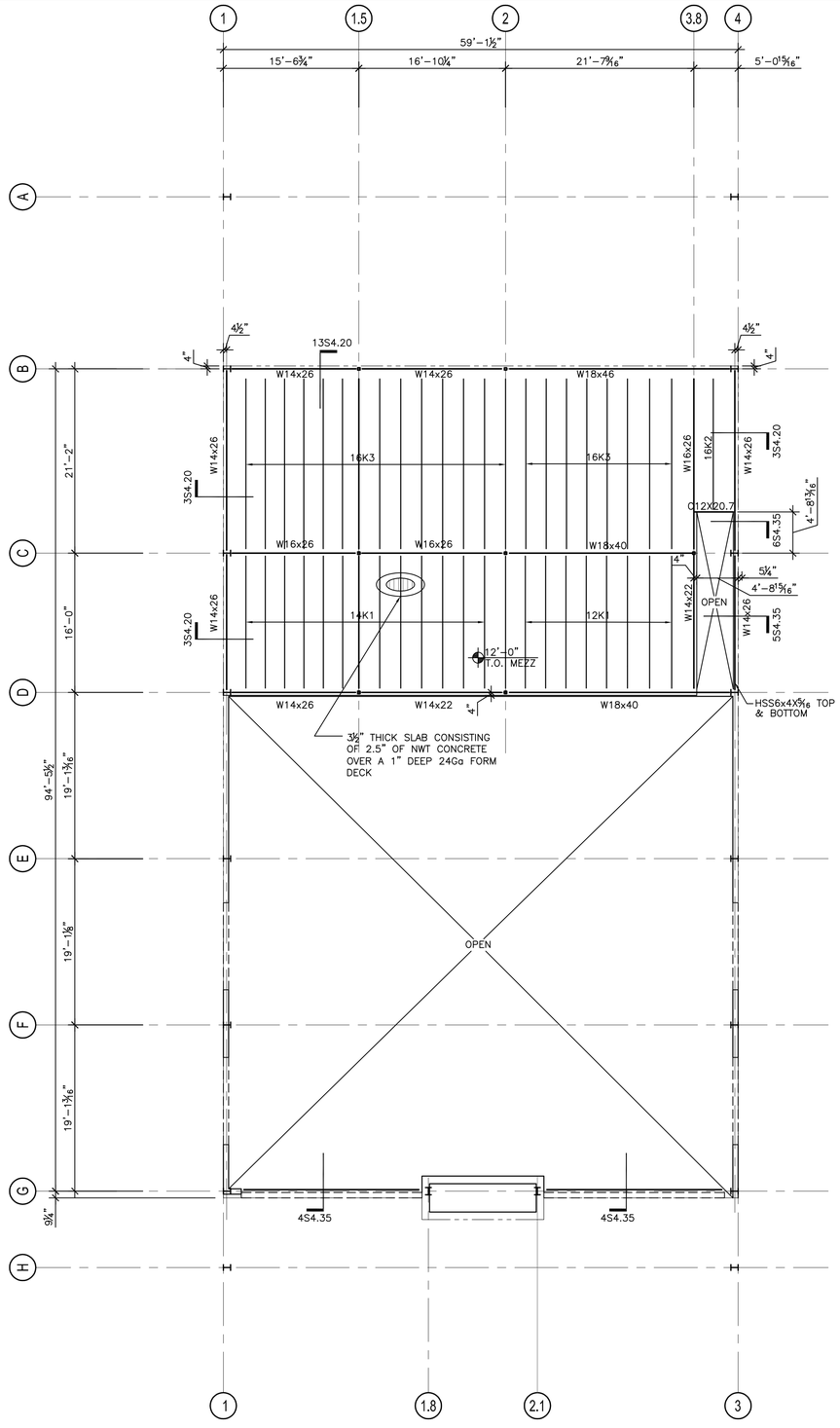

PLAN NOTES:
1. REFER TO SHEET S0.01 AND S0.02 FOR STRUCTURAL GENERAL NOTES AND ADDITIONAL INFORMATION.
2. SEE TYPICAL DETAILS SHEET S4.20 FOR ADDITIONAL INFORMATION.
3. JOISTS ARE EQUALLY SPACED BETWEEN COLUMNS U.N.O.
4. PROVIDE AN L4x3½x¼ LLH AROUND THE MEZZANINE PLAN NO EXCEPTIONS.

1 MEZZANINE PLAN

SCALE: 1/8" = 1'-0"

NORTH

VCS architects

19251 Purus Dr.
Porter, TX 77365

CONSULTANTS

Garza + McLain
www.garza-mclain.com STRUCTURAL ENGINEERS, INC.
13313 Southwest Freeway, Suite 163
Sugar Land, Texas 77478
(281) 494-1230 (voice)
(281) 494-1234 (fax)
FIRM NO.: F-9331
EXPIRATION: 5-31-2025
JOB NO.: 220170

BATES ALLEN PARK
BLACK COWBOY MUSEUM
CHARLIE ROBERTS LANE

STATE OF TEXAS
GABRIEL GARZA
90960
LICENSED
PROFESSIONAL ENGINEER
06-03-24

Drawing Date: 06/03/2024
Drawn By: SMA
Checked By: DDV
Scale: AS NOTED

Revisions:

DESCRIPTION	
100% CD'S	06/03/2024

Drawing Name

MEZZANINE PLAN

S1.02

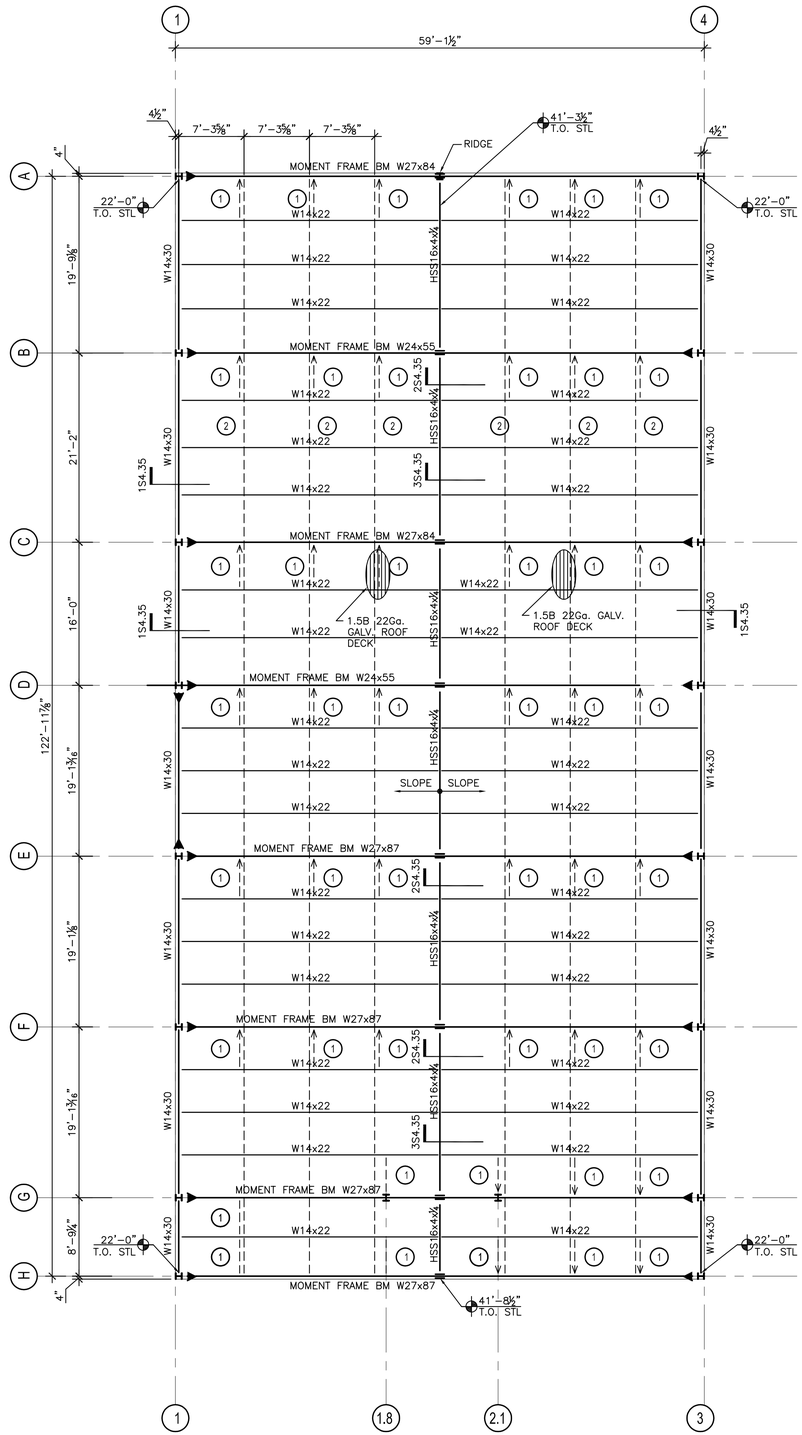

PLAN NOTES:

1. REFER TO S4.30 SERIES SHEETS FOR TYPICAL ROOF DETAILS.
2. REFER TO SHEET S0.01 AND S0.02 FOR STRUCTURAL GENERAL NOTES AND ADDITIONAL INFORMATION.
3. REFER TO ARCH'L AND MEP DRAWINGS FOR ADDITIONAL INFORMATION.
4. NOTATION THUS: X'-X" T.O. STL INDICATES BOTTOM OF ROOF DECK,TOP OF STEEL JOIST, OR TOP OF STEEL BEAM.
5. SEE STRUCTURAL GENERAL NOTES FOR ROOF DECK ATTACHMENT.
6. BEAMS ARE EQUALLY SPACED BETWEEN COLUMNS U.N.O.
7. NOTATION THUS: (1) INDICATES A BOTTOM FLANGE BRACE. SEE 1S4.30.
8. NOTATION THUS: ▶— INDICATES A MOMENT CONNECTION.
9. NOTATION THUS: (1) INDICATES BOTTOM FLANGE BRACING, SEE TYP. DETAIL.
10. PROVIDE A ¾" BENT PLATE WITH A 4" VERTICAL LEG AROUND THE ENTIRE ROOF PERIMETER.

1 ROOF PLAN

SCALE: 1/8" = 1'-0"

NORTH

VCS architects

19251 Purus Dr.
Porter, TX 77365

CONSULTANTS

Garza + McLain
www.garza-mclain.com STRUCTURAL ENGINEERS, INC.
13313 Southwest Freeway, Suite 163
Sugar Land, Texas 77478
(281) 494-1230 (voice)
(281) 494-1234 (fax)
FIRM NO.: F-9331
EXPIRATION: 5-31-2025
JOB NO.: 220170

BATES ALLEN PARK
BLACK COWBOY MUSEUM
CHARLIE ROBERTS LANE

STATE OF TEXAS
GABRIEL GARZA
90960
LICENSED
PROFESSIONAL ENGINEER
06-03-24

Drawing Date: 06/03/2024
Drawn By: SMA
Checked By: DDV
Scale: AS NOTED

Revisions:

DESCRIPTION	
100% CD'S	06/03/2024

Drawing Name

ROOF PLAN

S1.03

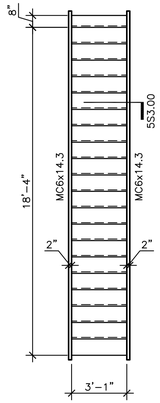

PLAN NOTES:
1. REFER TO ARCH'L DRAWINGS FOR ADDITIONAL INFORMATION
2. STAIR PARTIAL PLANS SHOW MEMBER SIZES THAT MEET THE MINIMUM PRESCRIBED LIVE LOADS IN THE IBC 2015. EXACT LAYOUT OF THE STAIRS AND ADDITIONAL MISC STEEL MEMBERS REQUIRED IS THE RESPONSIBILITY OF THE STAIR FABRICATOR AND MUST BE SHOWN ON THE STAIR SHOP DRAWINGS FOR REVIEW BY THE ARCHITECT AND ENGINEER REFER TO TYPICAL STAIR DETAILS FOR ADDITIONAL INFORMATION.
3. NOTATION THUS: ⊣⊢ DENOTES A BENT BEAM.
4. REFER TO PROJECT STRUCTURAL NOTES FOR ADDITIONAL INFORMATION REGARDING LOADS, STEEL STRENGTH ETC.
5. STEEL FABRICATOR OF STAIRS TO DETERMINE ALL ELEVATIONS AND DIMENSIONS FROM ARCH'L DWGS TO LAYOUT STAIR FRAMING.
6. STAIR STRINGERS AND LANDINGS ARE DESIGNED FOR A LIVE LOAD OF 100 PSF AS WELL AS A 300 LB CONCENTRATED LOAD.
7. VERTICAL GUIDE RAILS ARE DESIGN FOR 50#/1 ALONG THE TOP HORIZONTAL RAIL AND/OR A 200LB FORCE IN ANY DIRECTION. VERTICAL GUIDE RAILS MUST BE SPACED SUCH THAT THE TOP RAIL EITHER HORIZONTAL OR ON A SLOPE DOES NOT EXCEED A 4'-0" SPAN.

1 STAIR PLAN

SCALE: 1/4" = 1'-0"

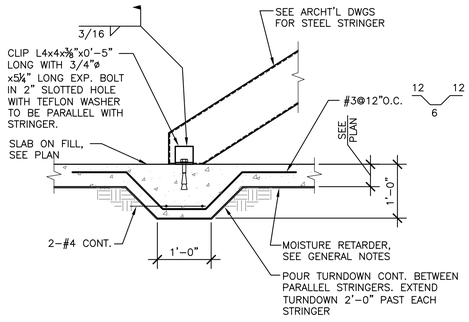

NOTES:
1. GENERAL CONTRACTOR IS RESPONSIBLE FOR THE COORDINATION OF STAIR STRINGER LOCATIONS WITH ARCHITECTURAL DRAWINGS AND PROVIDE TURNDOWNS WHERE REQUIRED. NOT SHOWN ON DRAWINGS.

2 TYPICAL DETAIL SLAB-ON-GRADE TURNDOWN AT STEEL STAIR

SCALE: NTS

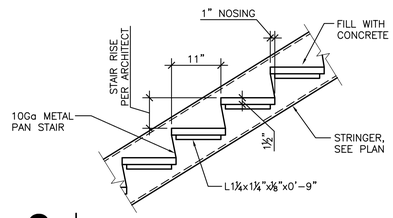

3 TYPICAL SECTION AT STAIRWAY

SCALE: 3/4"=1'-0"

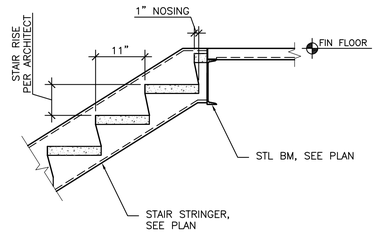

4 TYPICAL STAIR STRINGER TO STEEL CONNECTIONS DETAIL

SCALE: 3/4"=1'-0"

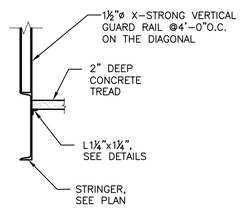

5 TYPICAL VERTICAL GUARDRAIL TO STAIR STRINGER DETAIL

SCALE: 3/4"=1'-0"

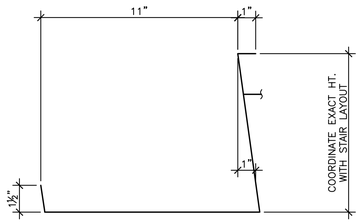

6 TYPICAL TREAD SUPPORT BEAM

SCALE: 3" = 1'-0"

19251 Purus Dr.
Porter, TX 77365

CONSULTANTS

Garza + McLain
www.garza-mclain.com STRUCTURAL ENGINEERS, INC.
13313 Southwest Freeway, Suite 163
Sugar Land, Texas 77478
(281) 494-1230 (voice)
(281) 494-1234 (fax)
FIRM NO.: F-9331
EXPIRATION: 5-31-2025
JOB NO.: 220170

BATES ALLEN PARK
BLACK COWBOY MUSEUM
CHARLIE ROBERTS LANE

STATE OF TEXAS
GABRIEL GARZA
90960
LICENSED
PROFESSIONAL ENGINEER
06-03-24

Drawing Date: 06/03/2024
Drawn By: SMA
Checked By: DDV
Scale: AS NOTED

Revisions:

DESCRIPTION	
100% CD'S	06/03/2024

Drawing Name

STAIR PLAN
AND DETAILS

S3.00

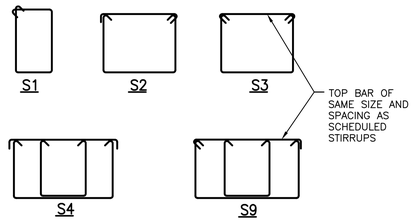

NOTES:
1. ALL HOOKS TO BE FABRICATED AS REQUIRED BY ACI.
2. TOP CAP OF STIRRUPS S2 AND S9 SHALL BE INSTALLED SUCH THAT 135° HOOK END IS NOT ON THE SIDE CONFINIED BY THE SLAB.

1 TYPICAL STIRRUP TYPES

SCALE: 3/4" = 1'-0"

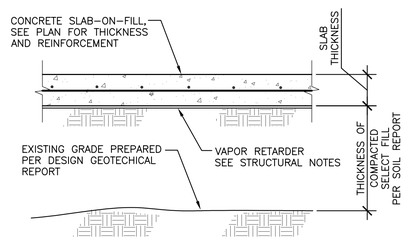

2 TYPICAL DETAIL SUBGRADE PREPARATION 6" THICK SLAB-ON-FILL CONSTRUCTION

SCALE: 3/4" = 1'-0"

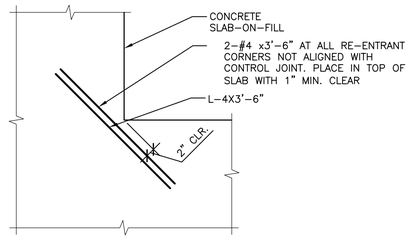

PLAN

3 TYPICAL SLAB-ON-FILL RE-ENTRANT CORNER REINFORCING DETAIL

SCALE: 3/4" = 1'-0"

DRILLED PIER VERTICAL SHAFT REINFORCEMENT SCHEDULE

SHAFT DIAMETER	VERTICAL BARS	TIES (USE #3@12" U.N.O.)
12	3-#5	#3@12
14,16	4-#6	#3@12
18	5-#6	#3@12
20	6-#6	#3@12
24	8-#6	#3@12
30	12-#6	#3@12
36	10-#7	#3@12

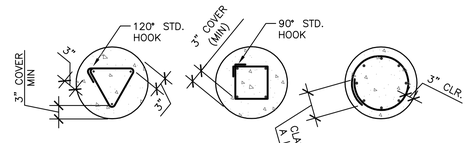

3 BARS 4 BARS 5 OR MORE BARS

NOTES:
1. SEE TYPICAL DRILLED PIER WITH UNDERREAMED SHAFT DETAIL.
2. EQUALLY SPACE ALL VERTICAL BARS.

4 SHAFT BAR PLACEMENT PLANS

SCALE: 3/4" = 1'-0"

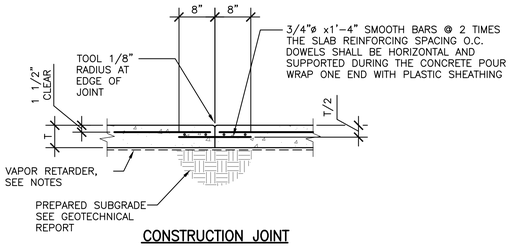

CONSTRUCTION JOINT

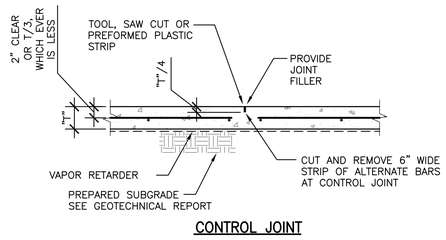

CONTROL JOINT

5 TYPICAL SLAB-ON-FILL CONSTRUCTION AND CONTROL JOINT DETAIL

SCALE: 3/4" = 1'-0"

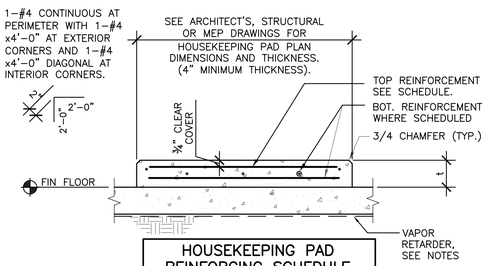

HOUSEKEEPING PAD REINFORCING SCHEDULE

t, PAD THICKNESS	TOP REINFORCING	BOTTOM REINFORCING
4"-6"	4x4 W4xW4	NONE
7"-8"	4"x4" W5.5xW5.5	NONE
9"-12"	#4@12"EW	#3@18"EW
13"-16"	#4@12"EW	#4@12"EW

NOTES:
1. GENERAL CONTRACTOR TO DETERMINE REQUIREMENTS FOR HOUSEKEEPING PADS OVER STRUCTURAL SLABS AND PROVIDE WHERE REQUIRED WHETHER SHOWN ON DRAWINGS OR NOT. COORDINATE DIMENSIONS AND OTHER SPECIAL REQUIREMENTS WITH EQUIPMENT MANUFACTURER AS REQUIRED.

6 TYPICAL DETAIL CONCRETE HOUSEKEEPING PAD OVER STRUCTURAL SLAB-ON-FILL

SCALE: 3/4" = 1'-0"

"ld" TENSION DEVELOPMENT LENGTH FOR BEAM, SLAB & WALL REBARS
(GRADE 60 UNCOATED BARS-NORMAL WEIGHT CONCRETE)

BAR SIZE	F'c=3000 psi		F'c=4000 psi		F'c=5000 psi	
	ld TOP	ld BOT	ld TOP	ld BOT	ld TOP	ld BOT
#3	1'-9"	1'-4"	1'-6"	1'-2"	1'-5"	1'-1"
#4	2'-4"	1'-10"	2'-1"	1'-7"	1'-10"	1'-5"
#5	3'-0"	2'-3"	2'-7"	2'-0"	2'-4"	1'-9"
#6	3'-7"	2'-9"	3'-1"	2'-4"	2'-9"	2'-1"
#7	5'-2"	4'-0"	4'-6"	3'-6"	4'-0"	3'-1"
#8	5'-11"	4'-7"	5'-2"	3'-11"	4'-7"	3'-6"
#9	6'-8"	5'-2"	5'-9"	4'-5"	5'-2"	4'-0"
#10	7'-6"	5'-10"	6'-6"	5'-0"	5'-10"	4'-6"
#11	8'-4"	6'-5"	7'-3"	5'-7"	6'-6"	5'-0"

NOTES:
1. "TOP" BARS ARE HORIZONTAL REBARS WITH MORE THAN 12 IN. OF FRESH CONCRETE CAST BELOW THE BARS AT THE DEVELOPMENT LENGTH.

2. "ld" FOR #3 & #4 BARS IN SLAB OR WALL ARE CONSERVATIVE & MAY BE REDUCED TO 0.75 TIMES (FOR #3 BARS) AND 0.94 TIMES (FOR #4 BARS) FROM THE TABULATED VALUES.

3. FOR LIGHT-WEIGHT CONCRETE MULTIPLY THE TABULATED VALUES BY 1.3.

7 TENSION DEVELOPMENT LENGTH FOR BEAM, SLAB AND WALL REBARS

SCALE: 3/4" = 1'-0"

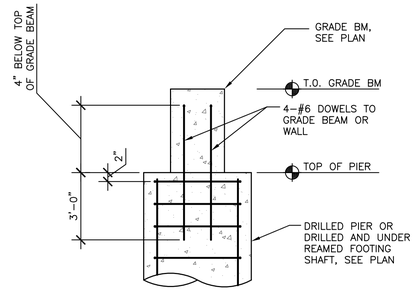

8 TYPICAL GRADE BEAM OR WALL TO DRILLED SHAFT DETAIL

SCALE: 3/4" = 1'-0"

TENSION LAP SPLICES - CLASS B FOR TOP & BOTTOM BARS
(GRADE 60 UNCOATED BARS-NORMAL WEIGHT CONCRETE)

BAR SIZE	F'c=3000 psi		F'c=4000 psi		F'c=5000 psi	
	ld TOP	ld BOT	ld TOP	ld BOT	ld TOP	ld BOT
#3	2'-4"	1'-9"	2'-0"	1'-6"	1'-10"	1'-5"
#4	3'-1"	2'-4"	2'-8"	2'-1"	2'-5"	1'-10"
#5	3'-10"	3'-0"	3'-4"	2'-7"	3'-0"	2'-4"
#6	4'-8"	3'-7"	4'-0"	3'-1"	3'-7"	2'-9"
#7	6'-9"	5'-2"	5'-10"	4'-6"	5'-3"	4'-0"
#8	7'-9"	5'-11"	6'-8"	5'-2"	6'-0"	4'-7"
#9	8'-8"	6'-8"	7'-6"	5'-9"	6'-9"	5'-2"
#10	9'-10"	7'-6"	8'-6"	6'-6"	7'-7"	5'-10"
#11	10'-11"	8'-4"	9'-5"	7'-3"	8'-5"	6'-6"

NOTE:
FOR CLASS "A" SPLICE (PERMITTED ONLY WHEN NOT MORE THAN HALF THE BARS SPLICED & SPICES STAGGERED BY THE DISTANCE OF SPLICE LENGTH), USE SAME AS "ld" = TENSION DEVELOPMENT LENGTH TABLE.

9 TENSION LAP SPLICES - CLASS B FOR TOP AND BOTTOM BARS

SCALE: 3/4" = 1'-0"

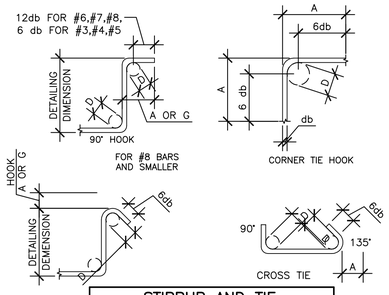

STIRRUP AND TIE HOOK SCHEDULE

BAR SIZE	D (IN.)	90° HOOK A OR G (IN.)	135° HOOK A OR G (IN.)
#3	1 1/2	4	4
#4	2	4 1/2	4 1/2
#5	2 1/2	6	5 1/2

D= INSIDE DIAMETER OF BEND

10 TYPICAL DETAIL STIRRUP AND TIE HOOK TYPES

SCALE: 3/4" = 1'-0"

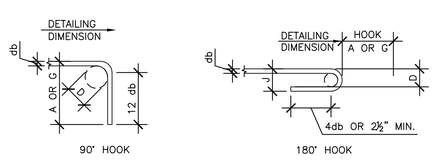

RECOMMENDED END HOOKS, ALL GRADES

BAR SIZE	FINISHED BEND DIAMETER D, (IN.)	180° HOOK		90° HOOK
		A OR G,(IN.)	J. (IN.)	A OR G,(IN.)
#3	2 1/2	5	3	6
#4	3	6	4	8
#5	3 3/4	7	5	10
#6	4 1/2	8	6	12
#7	5 1/2	10	7	14
#8	6	11	8	16
#9	9 1/2	15	11 3/4	19
#10	10 1/2	17	13 1/4	22
#11	12	19	14 3/4	24
#14	18 1/2	27	21 3/4	31
#18	24	36	28 1/2	41

D= INSIDE DDIAMETER OF BEND

11 TYPICAL DETAIL END HOOK TYPES

SCALE: 3/4" = 1'-0"

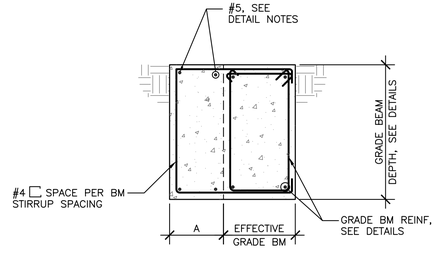

NOTES:
1. ADDITIONAL REINFORCING REQUIRED FOR BEAMS WIDENED BY 3" OR MORE.
2. FOR A < 6" PROVIDE 1-#5 CONT. TOP AND BOTT.
3. FOR 6"≤ A≤ 14" PROVIDE 2-#5 CONT. TOP AND BOTTOM.
4. NOTIFY ENGINEER IF A IS GREATER THAN 14"

12 TYPICAL WIDENED GRADE BEAM DETAIL

SCALE: 3/4" = 1'-0"

VCS architects
19251 Purus Dr.
Porter, TX 77365

CONSULTANTS
Garza + McLain
www.garza-mclain.com STRUCTURAL ENGINEERS, INC.
13313 Southwest Freeway, Suite 163
Sugar Land, Texas 77478
(281) 494-1230 (voice)
(281) 494-1234 (fax)
FIRM NO.: F-9331
EXPIRATION: 5-31-2025
JOB NO.: 220170

BATES ALLEN PARK
BLACK COWBOY MUSEUM
CHARLIE ROBERTS LANE

STATE OF TEXAS
GABRIEL GARZA
90960
LICENSED PROFESSIONAL ENGINEER
06-03-24

Drawing Date: 06/03/2024
Drawn By: SMA
Checked By: DDV
Scale: AS NOTED

Revisions:

DESCRIPTION	
100% CD'S	06/03/2024

Drawing Name

TYPICAL FOUNDATION DETAILS

S4.00

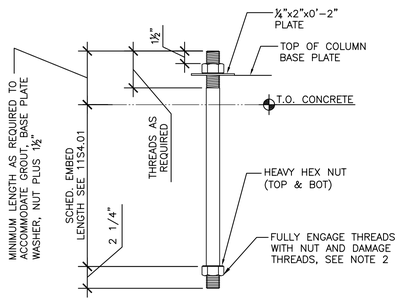

NOTES:
1. SEE BASE PLATE SCHEDULE FOR ANCHOR ROD SIZE.
2. ANCHOR ROD THREADS AT THE EMBEDDED END SHALL BE STRIKED AT TWO PLACES DIRECTLY BELOW THE HEAVY HEX NUT.
3. UNLESS NOTED OTHERWISE, ALL RODS SHALL BE TIGHTENED TO A "SNUG TIGHT" CONDITION AS DEFINED BY AISC AFTER THE CONCRETE IS AT LEAST 14 DAYS OLD.
4. THE HOLE IN THE PLATE WASHER SHALL BE 1/16" LARGER THAN THE BOLT DIAMETER.
5. ALL ANCHOR RODS SHALL CONFORM TO ASTM F1554 GRADE 55 WITH SUPPLEMENT.

1 TYPICAL ANCHOR ROD DETAIL

SCALE: 3/4" = 1'-0"

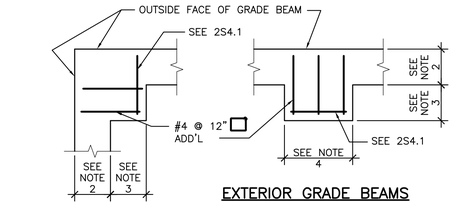

EXTERIOR GRADE BEAMS

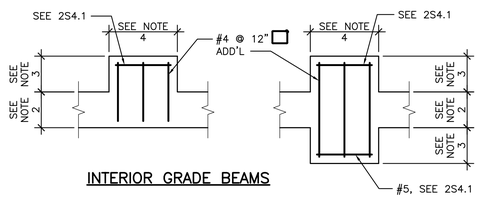

INTERIOR GRADE BEAMS

NOTE:
1. PLAN VIEWS FOR TYPICAL WIDENED GRADE BEAMS ARE SHOWN. FOR SIMILAR CONDITION NOT SHOWN, SEE 2S4.1.
2. SEE DETAILS FOR GRADE BEAM WIDTH.
3. GRADE BM WIDTH OR 1'-4" WHICH EVER IS GREATER.
4. WIDTH TO BE 2'-8" MIN.

2 TYPICAL DETAIL ADDITIONAL BARS AT WIDENED GRADE BEAM (PLAN VIEW) AT COLUMNS

SCALE: 3/4" = 1'-0"

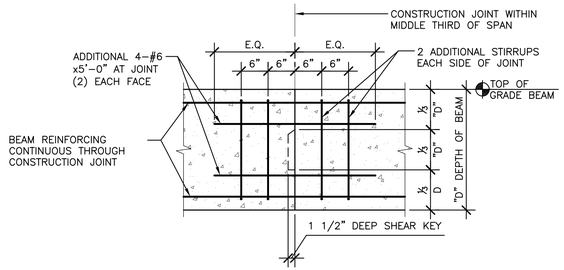

ELEVATION

NOTES:
1. CONTRACTOR TO SUBMIT CONSTRUCTION JOINT LAYOUT AND COORDINATE WITH REINFORCING STEEL FABRICATOR.
2. JOINT TO BE LOCATED AT MIDDLE THIRD OF SPAN.
3. THIS DETAIL, APPLIES TO BEAMS ≤ 4'-0" DEPTH.

KEY WIDTH	
GRADE BEAM WIDTH	W
12"	3 1/2"
12" TO 16"	5 1/2"
16" TO 20"	7 1/4"
20" TO 24"	9 1/4"
24" TO 30"	11 1/4"

3 TYPICAL BEAM CONSTRUCTION JOINT DETAIL

SCALE: 3/4" = 1'-0"

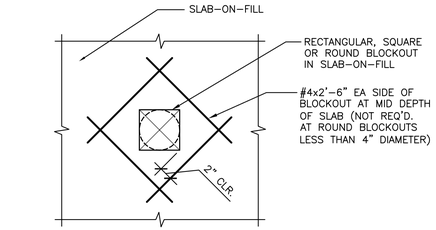

PLAN

4 TYPICAL ADDITIONAL REINFORCING AT BLOCKOUT IN SLAB-ON-FILL DETAIL

SCALE: 3/4" = 1'-0"

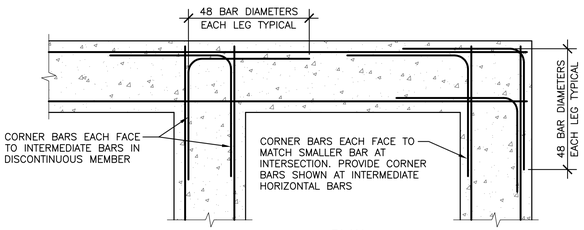

PLAN

NOTES:
1. MATCH SIZE, LOCATION AND NUMBER OF HORIZONTAL BEAM AND WALL BARS.
2. STOP DETAILED REINF. 2" SHORT OF FORM.

5 TYPICAL CORNER BARS FOR INTERMEDIATE (FACE BARS) AT WALL OR GRADE BEAM INTERSECTION DETAIL

SCALE: 3/4" = 1'-0"

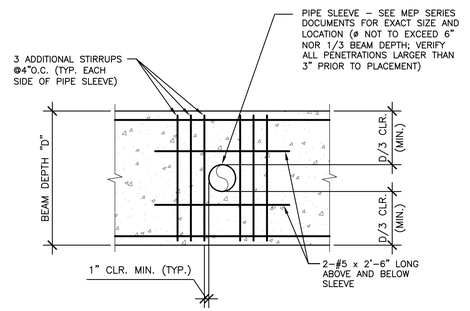

NOTES:
1. NOTIFY ENGINEER IMMEDIATELY IF HORIZONTAL SLEEVE CAN NOT BE INSTALLED AS SHOWN. ADDITIONAL REINFORCING MAY BE REQUIRED.
2. PIPE OR PIPE SLEEVE TO COMPLETELY PASS THROUGH WIDTH OF BEAM PRIOR TO TURNING VERTICAL NO EXCEPTIONS.

6 TYPICAL HORIZONTAL GRADE BEAM PENETRATION DETAIL

SCALE: 3/4" = 1'-0"

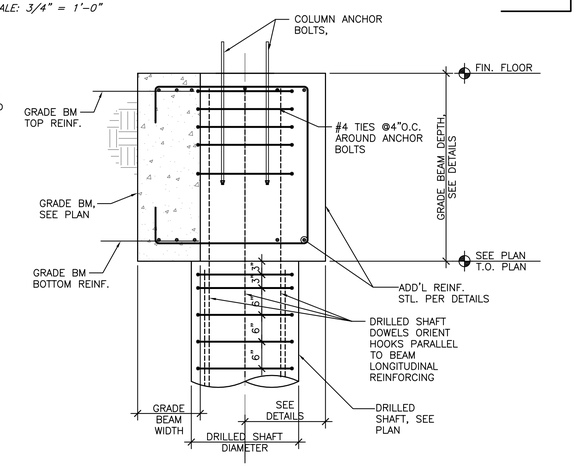

7 TYPICAL DOWEL AND ADDITIONAL REINFORCING DETAIL AT COLUMNS

SCALE: 3/4" = 1'-0"

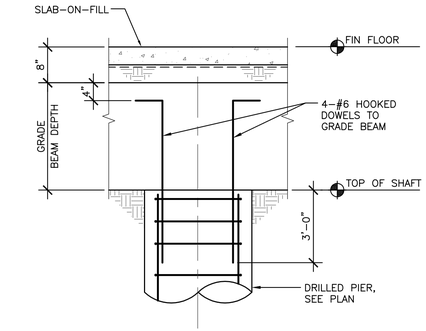

8 TYPICAL GRADE BEAM TO PIER DETAIL

SCALE: NTS

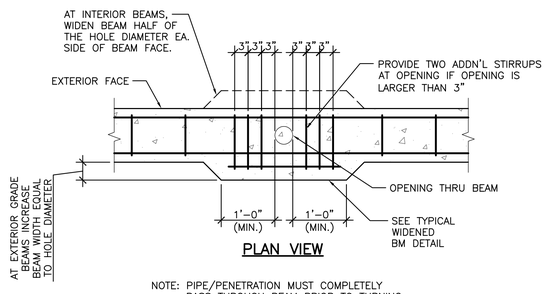

PLAN VIEW

NOTE: PIPE/PENETRATION MUST COMPLETELY PASS THROUGH BEAM PRIOR TO TURNING

9 TYPICAL DETAIL VERTICAL PENETRATION THRU GRADE BEAM LARGER THAN 15% OF THE GRADE BEAM WIDTH

SCALE: 3/4" = 1'-0"

COLUMN SCHEDULE		
COLUMN MARK	COLUMN SIZE	BASE PLATE
C1	W12X87	BP1
C2	W12X120	BP1
C3	W12X170	BP1
C4	W12X72	BP1
C5	HSS4X4X⅜	BP2
C6	HSS4X4X⅜	BP3
C7	W12X72	BP4
C8	W12X87	BP4
C9	W12X170	BP4

NOTES:
1. REFER TO 6S4.02 FOR TYPICAL BASE PLATE ELEVATION DETAIL.
2. REFER TO 7S4.02 FOR BASE PLATE PLAN DETAIL.
3. WELD DIRECTLY TO BEAM
4. SEE 8S4.02 BASE PLATE SCHEDULE.

10 COLUMN SCHEDULE

SCALE: NTS

BASE PLATE SCHEDULE										
MARK	BASE PLATE DIMENSIONS					DETAIL	DEFORMED BAR ANCHORS			BASE PLATE WELD
	V	W	Y	Z	T		NO.	DIA.	EMBED LENGTH	
BP1	14	14	3.5	4	½"	7S4.03	(4)	¾"ø	1'-6"	5/16
BP2	12	12	4.5	4.5	½"	7S4.03	(4)	¾"ø	1'-6"	5/16
BP3	22	14	4.5	4.5	¾"	7S4.03	(6)	1"ø	1'-6"	⅜
BP4	22	14	4.5	4.5	1"	7S4.03	(6)	1"ø	1'-6"	⅜

NOTES:
1. ALL BASE PLATES SHALL BE ASTM A572 GRADE 50KSI.
2. ALL ANCHOR RODS SHALL CONFORM TO ASTM F1554 GRADE 55 WITH SUPPLEMENT
3. DIMENSION V TO BE PARALLEL WITH COLUMN LONG SIDE.
4. SEE DETAIL 7S4.02 FOR ADDITIONAL INFORMATION.

11 BASE PLATE SCHEDULE

SCALE: NTS

VCS architects
19251 Purus Dr.
Porter, TX 77365

CONSULTANTS

Garza + McLain
www.garza-mclain.com STRUCTURAL ENGINEERS, INC.
13313 Southwest Freeway, Suite 163
Sugar Land, Texas 77478
(281) 494-1230 (voice)
(281) 494-1234 (fax)
FIRM NO.: F-9331
EXPIRATION: 5-31-2025
JOB NO.: 220170

BATES ALLEN PARK
BLACK COWBOY MUSEUM
CHARLIE ROBERTS LANE

STATE OF TEXAS
GABRIEL GARZA
90960
LICENSED PROFESSIONAL ENGINEER
06-03-24

Drawing Date: 06/03/2024
Drawn By: SMA
Checked By: DDV
Scale: AS NOTED

Revisions:

DESCRIPTION	
100% CD'S	06/03/2024

Drawing Name

TYPICAL FOUNDATION DETAILS

S4.01

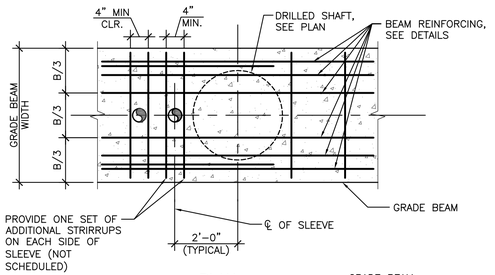

PLAN

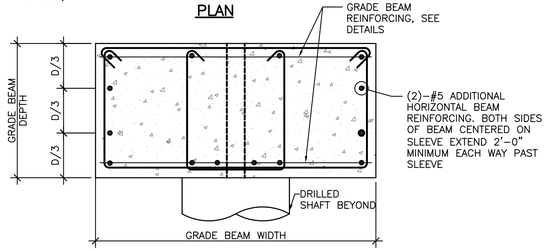

SECTION

NOTES:
1. REQUIRED BEAM SLEEVES ARE TO BE COORDINATED WITH MEP CONTRACTORS. REQUIRED SLEEVES MAY OR MAY NOT BE SHOWN ON THE STRUCTURAL DRAWINGS. GENERAL CONTRACTOR SHALL SUBMIT PLAN SHOWING LAYOUT OF ALL SLEEVES.
2. SLEEVES SHALL BE LOCATED ON THE BEAM CENTERLINE OR AT LEAST WITHIN THE MIDDLE THIRD OF THE GRADE BEAM WIDTH.
3. CONTINUOUS BEAM REINFORCING MAY BE SLIGHTLY DISPLAY (3" MAXIMUM) OR ADJACENT BARS BUNDLED (2 BAR BUNDLE MAXIMUM) TO FACILITATE SLEEVE INSTALLATION. DO NOT CUT, OFFSET, OR BEND REINFORCING.
4. SLEEVES OCCURRING ON OPPOSITE SIDES OF A PIER MUST BE IN LINE.
5. THE OUTSIDE DIAMETER OF A SLEEVE MAY NOT EXCEED 15% OF THE WIDTH OF THE GRADE BEAM THROUGH WHICH IT MUST PASS. THE CONTRACTOR SHALL CONTACT THE ENGINEER OF THE RECORD FOR DIRECTIONS WHEN A SLEEVE SIZE OR LOCATION DOES NOT MEET THE CONDITIONS ESTABLISHED ABOVE.
6. SLEEVE OR PIPE MUST COMPLETELY PASS THROUGH BEAM DEPTH PRIOR TO TURNING HORIZONTAL, NO EXCEPTIONS.

1 TYPICAL DETAIL VERTICAL PENETRATION, CONCRETE GRADE BEAM

SCALE: NTS

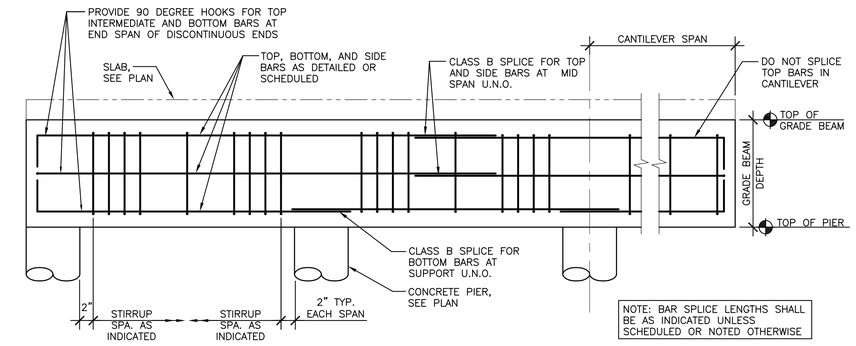

2 GRADE BEAM REINFORCING TYPICAL DETAIL

SCALE: NTS

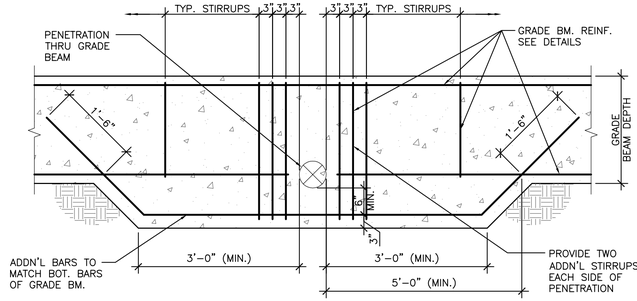

ELEVATION VIEW

NOTE: PIPE/PENETRATION MUST COMPLETELY PASS THROUGH BEAM PRIOR TO TURNING

3 TYPICAL DETAIL HORIZONTAL PENETRATION OPENING THRU GRADE BEAM AT BOTTOM LONGITUDIAL REINFORCEMENT

SCALE: 3/4" = 1'-0"

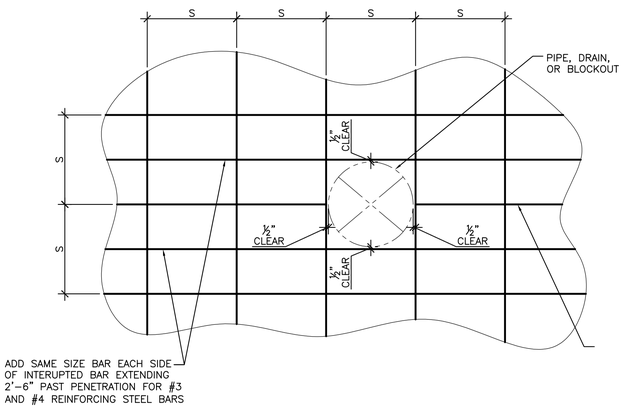

4 TYPICAL ADDTIONAL SLAB REINFORCING STEEL DETAIL AT INTERUPTED BARS

SCALE: 3/4"=1'-0"

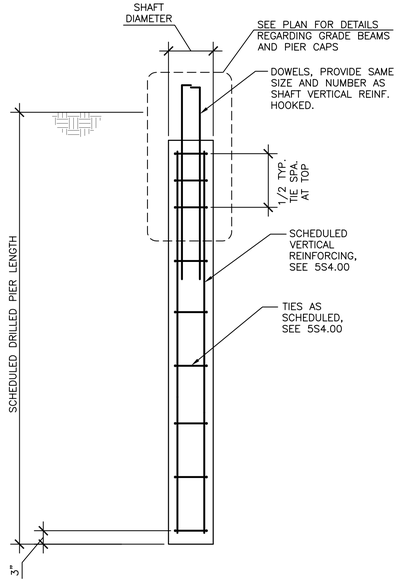

ELEVATION

NOTES:
1. SEE TYPICAL DETAIL "DRILLED SHAFT BAR PLACEMENT PLANS" FOR SHAFT REINFORCING AND BAR PLACEMENT.
2. MINIMUM DEPTH IS BASED ON EXISTING NATURAL GRADE AS SPECIFIED IN SOILS REPORT.

5 TYPICAL DRILLED SHAFT WITH UNDERREAMED FOOTING DETAIL

SCALE: NTS

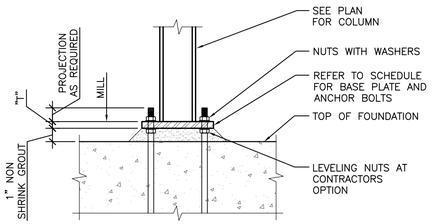

NOTES: THE LETTER "T" DENOTES BASE PLATE THICKNESS.

6 TYPICAL BASE PLATE ELEVATION DETAIL

SCALE: NTS

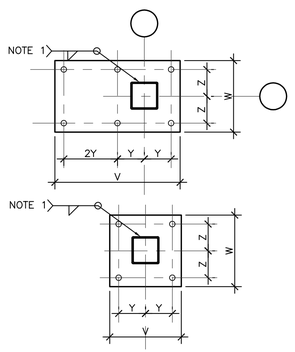

"A"

NOTES:
1. REFER TO BASE PLATE SCHEDULE FOR WELD SIZE.
2. BASE PLATE MAY UTILIZE ANCHOR BOLTS OR DEFORMED BAR ANCHORS, SEE SCHEDULE.

7 TYPICAL BASE PLATE DETAIL

SCALE: NTS

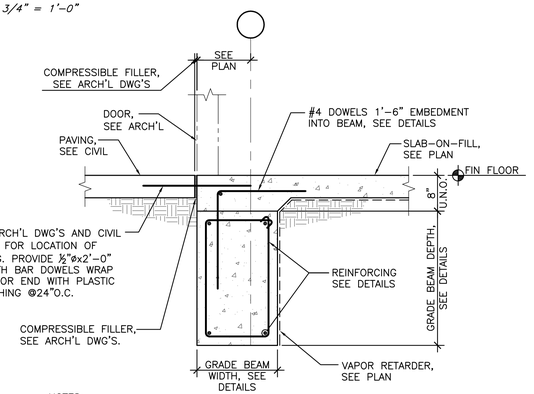

NOTES:
1. SEE STRUCTURAL GENERAL NOTES FOR CLEAR COVER AT SIDES, TOP AND BOTTOM OF BEAM

8 TYPICAL DETAIL PAVING ATTACHMENT TO PERIMETER FOUNDATION

SCALE: NTS

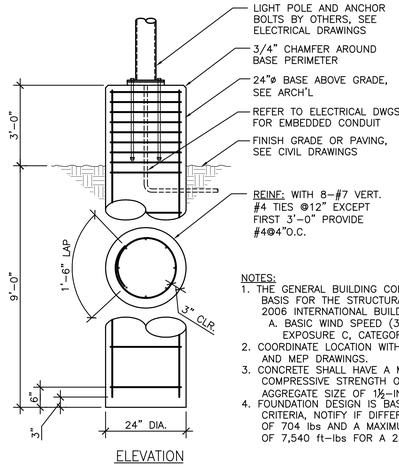

ELEVATION

NOTES:
1. THE GENERAL BUILDING CODE USED AS THE BASIS FOR THE STRUCTURAL DESIGN IS THE 2006 INTERNATIONAL BUILDING CODE WITH
   A. BASIC WIND SPEED (3 SEC) 135 MPH EXPOSURE C, CATEGORY II
2. COORDINATE LOCATION WITH ARCHT'L, CIVIL AND MEP DRAWINGS.
3. CONCRETE SHALL HAVE A MINIMUM COMPRESSIVE STRENGTH OF 3000 psi. WITH AGGREGATE SIZE OF 1½-INCHES.
4. FOUNDATION DESIGN IS BASED ON FOLLOWING CRITERIA, NOTIFY IF DIFFERENT: BASE SHEAR OF 704 lbs AND A MAXIMUM BASE MOMENT OF 7,540 ft-lbs FOR A 25'-0" POLE

11 TYPICAL LIGHTPOLE FOUNDATION DETAIL

SCALE: NTS

VCS architects
19251 Purus Dr.
Porter, TX 77365

CONSULTANTS
Garza + McLain
www.garza-mclain.com STRUCTURAL ENGINEERS, INC.
13313 Southwest Freeway, Suite 163
Sugar Land, Texas 77478
(281) 494-1230 (voice)
(281) 494-1234 (fax)
FIRM NO.: F-9331
EXPIRATION: 5-31-2025
JOB NO.: 220170

BATES ALLEN PARK
BLACK COWBOY MUSEUM
CHARLIE ROBERTS LANE

STATE OF TEXAS
GABRIEL GARZA
90960
LICENSED PROFESSIONAL ENGINEER
06-03-24

Drawing Date: 06/03/2024
Drawn By: SMA
Checked By: DDV
Scale: AS NOTED

Revisions:

DESCRIPTION	
100% CD'S	06/03/2024

Drawing Name

TYPICAL FOUNDATION DETAILS

S4.02

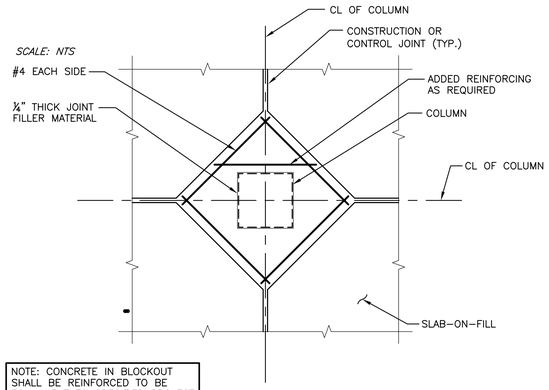

NOTE: CONCRETE IN BLOCKOUT SHALL BE REINFORCED TO BE EQUIVALENT TO SPECIFIED PROJECT SLAB REINFORCING BUT MAXIMUM SPACING SHALL NOT EXCEED 12"

PLAN

NOTES:
1. GENERAL CONTRACTOR TO COORDINATE REQUIRED SIZE OF BLOCKOUT FOR STRUCTURAL STEEL COLUMNS WITH STEEL ERECTOR. SUBMIT THE DESIRED BLOCKOUT SIZE TO ARCHITECT/ENGINEER FOR APPROVAL.
2. PROVIDE 3" MINIMUM CONCRETE COVER ALL AROUND COLUMN, AND BASE PLATE.
3. CONSTRUCTION JOINTS AND REINFORCING MUST BE INSTALLED AS IF BLOCKOUT FOR COLUMN WAS TO OCCUR. CONTRACTOR MAY FLOAT FORM AND POUR AT ONE TIME HOWEVER, SAW CUTS MAY NOT EXTEND BEYOND DIAMOND CONSTRUCTION JOINTS.

1 TYPICAL DETAIL SLAB-ON-FILL BLOCKOUT AROUND COLUMNS

SCALE: NTS

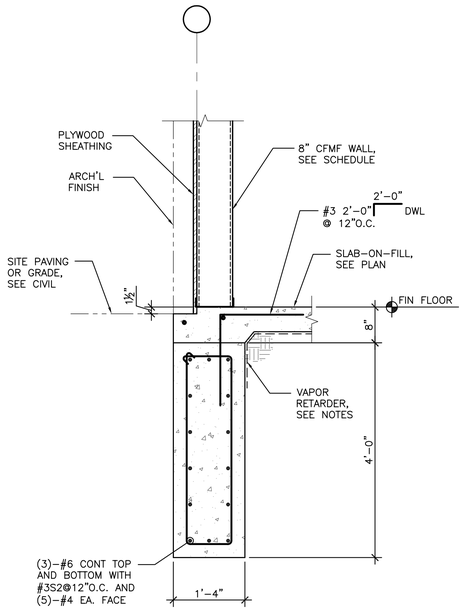

2 DETAIL

SCALE: 3/4" = 1'–0"

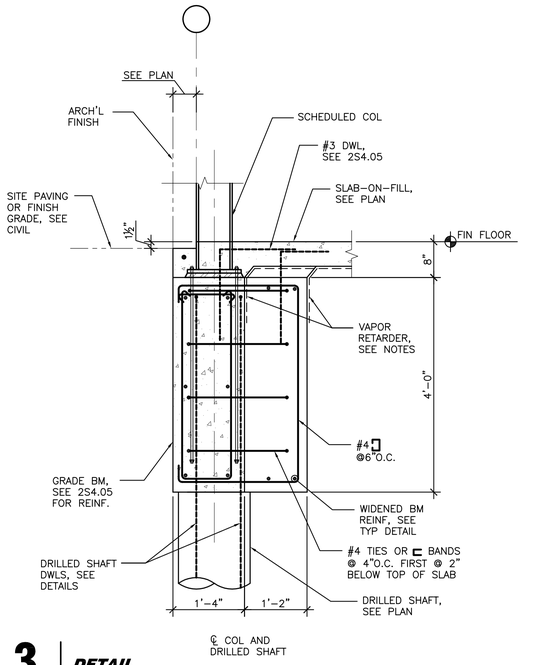

3 DETAIL

SCALE: 3/4" = 1'–0"

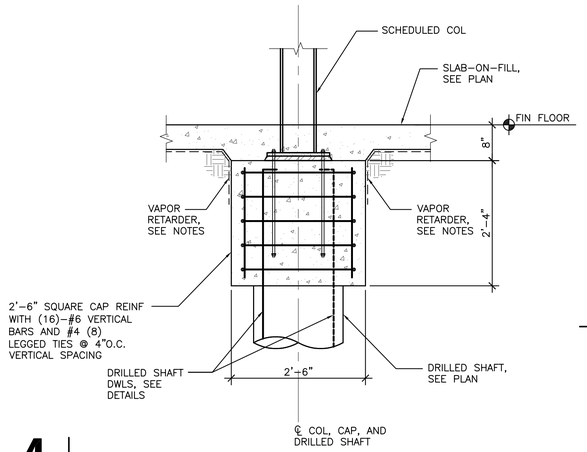

4 DETAIL

SCALE: 3/4" = 1'–0"

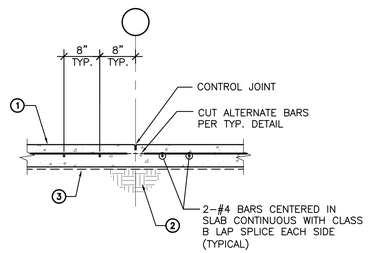

5 TYPICAL SLAB-ON-FILL CONSTRUCTION JOINT DETAIL

SCALE: 3/4"=1'–0"

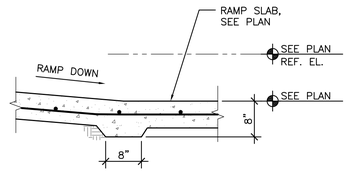

6 DETAIL

SCALE: NTS

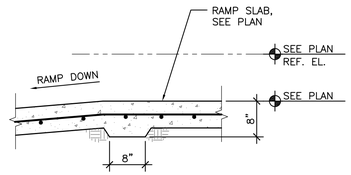

7 DETAIL

SCALE: NTS

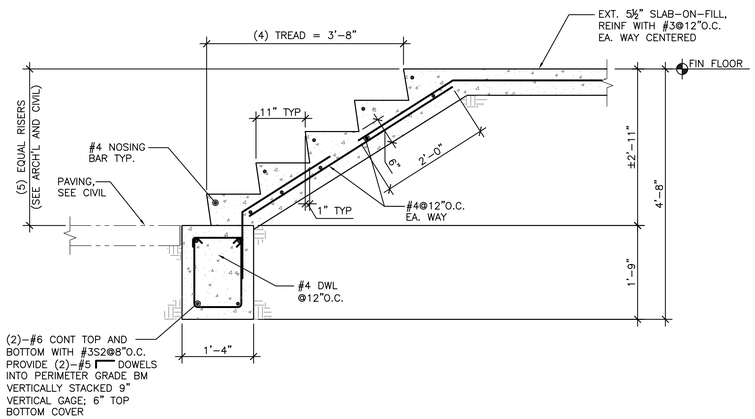

8 DETAIL

SCALE: 3/4" = 1'–0"

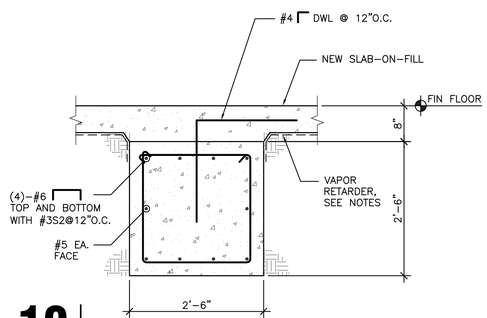

10 DETAIL

SCALE: 3/4" = 1'–0"

VCS architects
19251 Purus Dr.
Porter, TX 77365

CONSULTANTS
Garza + McLain
www.garza-mclain.com STRUCTURAL ENGINEERS, INC.
13313 Southwest Freeway, Suite 163
Sugar Land, Texas 77478
(281) 494-1230 (voice)
(281) 494-1234 (fax)
FIRM NO.: F-9331
EXPIRATION: 5-31-2025
JOB NO.: 220170

BATES ALLEN PARK
BLACK COWBOY MUSEUM
CHARLIE ROBERTS LANE

STATE OF TEXAS
GABRIEL GARZA
90960
LICENSED
PROFESSIONAL ENGINEER
06-03-24

Drawing Date: 06/03/2024
Drawn By: SMA
Checked By: DDV
Scale: AS NOTED

Revisions:

DESCRIPTION	
100% CD'S	06/03/2024

Drawing Name

FOUNDATION DETAILS

S4.05

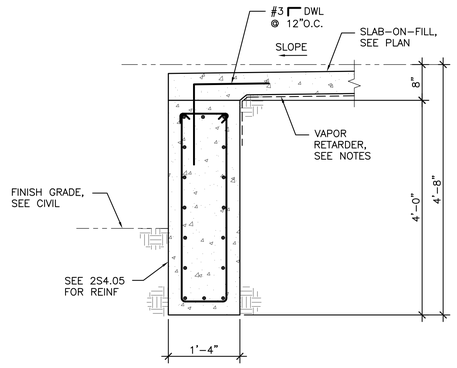

1 DETAIL

SCALE: 3/4" = 1'–0"

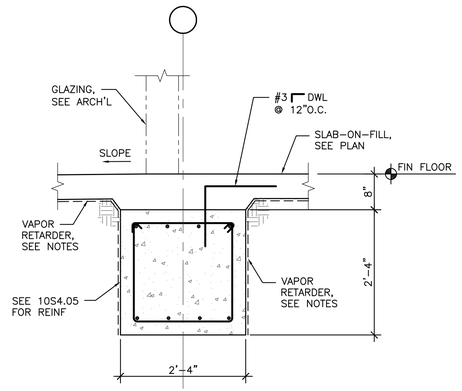

2 DETAIL

SCALE: 3/4" = 1'–0"

architects

19251 Purus Dr.
Porter, TX 77365

CONSULTANTS

Garza + McLain
www.garza-mclain.com STRUCTURAL ENGINEERS, INC.
13313 Southwest Freeway, Sulte 163
Sugar Land, Texas 77478
(281) 494-1230 (voice)
(281) 494-1234 (fax)
FIRM NO.: F-9331
EXPIRATION: 5-31-2025
JOB NO.: 220170

BATES ALLEN PARK
BLACK COWBOY MUSEUM
CHARLIE ROBERTS LANE

STATE OF TEXAS
GABRIEL GARZA
90960
LICENSED
PROFESSIONAL ENGINEER
06-03-24

Drawing Date: 06/03/2024
Drawn By: SMA
Checked By: DDV
Scale: AS NOTED

Revlslons:

DESCRIPTION	
100% CD'S	06/03/2024

Drawing Name

FOUNDATION
DETAILS

S4.06

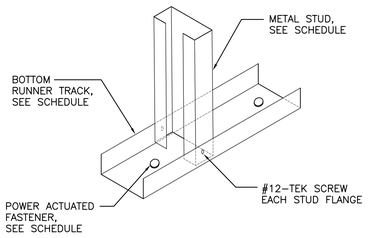

1 TYPICAL DETAIL STUD ATTACHMENT TO BOTTOM RUNNER TRACK

SCALE: NTS

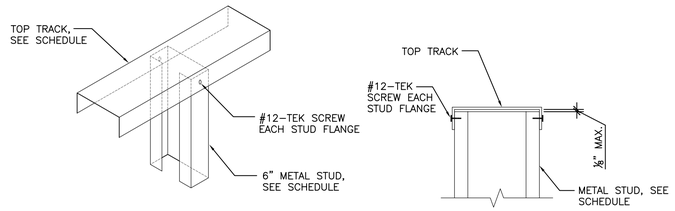

2 TYPICAL DETAIL STUD ATTACHMENT TO TOP RUNNER TRACK

SCALE: NTS

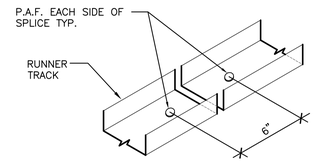

NOTE: SPLICE AT CENTER BETWEEN STUDS

3 TYPICAL DETAIL BOTTOM RUNNER TRACK AT SPLICE

SCALE: NTS

LOCATION	STUDS (TYPICAL)	SPACING	TRACK	BOTTOM CONNX.	INT. CONNX.	TOP CONNX.
h < 21'-0"	800S162-54	16"O.C.	800T125-54	(2)-0.157 X-U	SEE DETAILS	8S4.15

SCHEDULE NOTES:
1. WALL HEIGHT IS THE DISTANCE BETWEEN LEVELS.
2. REFER TO STRUCTURAL GENERAL NOTES FOR REQUIREMENTS OF X-U FASTENERS
3. CONNECTION OF TOP TRACK IS BASED ON ATTACHING METAL STUD TO ⅛" THICK MATERIAL.
4. METAL STUD TOP AND BOTTOM TRACK GAUGE SHALL BE SAME AS STUD U.N.O.
5. BOTTOM FASTENER AT EACH STUD UNLESS NOTED OTHERWISE.
6. REFER TO STRUCTURAL GENERAL NOTES FOR ATTACHMENT OF SHEATHING AT FRONT SIDE OF STUD AS WELL AS BACK SIDE OF PARAPET.

4 EXTERIOR NON LOAD BEARING METAL STUD SCHEDULE

SCALE: NTS

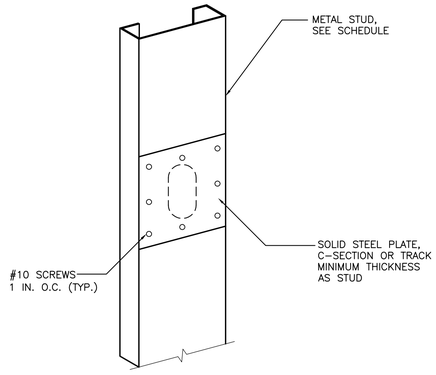

5 TYPICAL HOLE PATCH DETAIL

SCALE: NTS

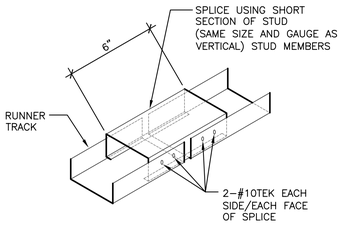

6 TYPICAL DETAIL RUNNER TRACK SPLICE (TOP)

SCALE: NTS

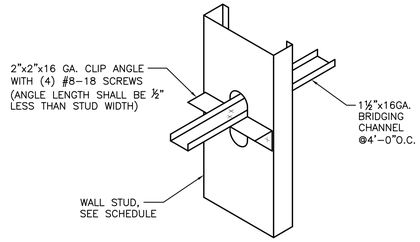

NOTE: PROVIDE BRIDGING @4'-0"O.C. VERTICALLY

7 TYPICAL U-CHANNEL BRIDGING DETAIL

SCALE: NTS

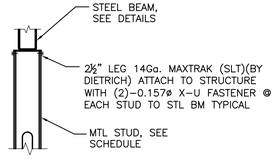

8 TYPICAL STUD TO TOP TRACK @ STEEL ATTACHMENT DETAIL

SCALE: NTS

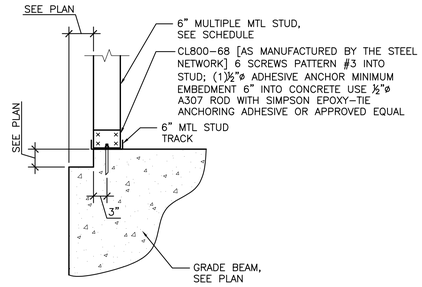

9 TYPICAL MULTIPLE METAL STUD CONNECTION AT FOUNDATION DETAIL

SCALE: NTS

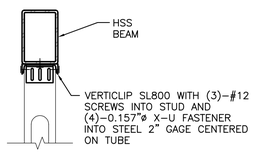

10 TYPICAL METAL STUD CONNECTION DETAIL AT 1'-0" FROM END OF TRACK

SCALE: 3/4"=1'-0"

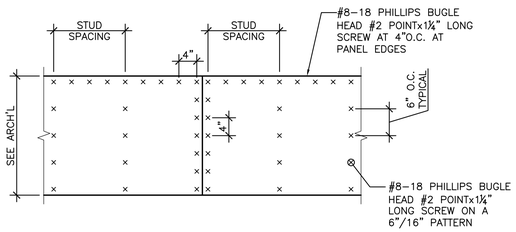

11 PLYWOOD TO METAL STUD ATTACHMENT PATTERN

SCALE: 3/4"=1'-0"

VCS architects

19251 Purus Dr.
Porter, TX 77365

CONSULTANTS

Garza + McLain
www.garza-mclain.com STRUCTURAL ENGINEERS, INC.
13313 Southwest Freeway, Suite 163
Sugar Land, Texas 77478
(281) 494-1230 (voice)
(281) 494-1234 (fax)
FIRM NO.: F-9331
EXPIRATION: 5-31-2025
JOB NO.: 220170

BATES ALLEN PARK
BLACK COWBOY MUSEUM
CHARLIE ROBERTS LANE

STATE OF TEXAS
GABRIEL GARZA
90960
LICENSED
PROFESSIONAL ENGINEER
06-03-24

Drawing Date: 06/03/2024
Drawn By: SMA
Checked By: DDV
Scale: AS NOTED

Revisions:

DESCRIPTION	
100% CD'S	06/03/2024

Drawing Name

TYPICAL WALL DETAILS

S4.15

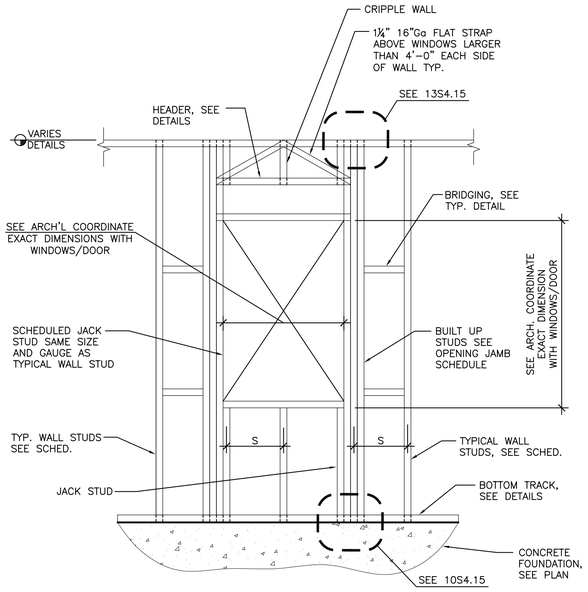

NOTES:
1. ATTACH MULTIPLE STUDS WITH 2–#12 TEK @12"O.C.
2. REFER TO ARCH'L DRAWINGS FOR WINDOW/DOOR OPENING SIZE.
3. ATTACH DOORS AND WINDOWS PER MANUFACTURER'S GUIDELINES AND RECOMMENDATIONS.
4. NOTATION THUS "S" DENOTES WALL STUD SPACING REFER TO SCHEDULE.
5. REFER TO SCHEDULE FOR TYPICAL STUD SIZES, PROVIDE SAME STUD AT DOORS AND WINDOWS AS SPECIFIED IN METAL STUD SCHEDULE.
6. REFER TO TYPICAL DETAILS FOR P.A.F. SIZE AND EMBEDMENT.
7. HEIGHT LESS THAN 11'–0"
8. HEIGHT LESS THAN 21'–0"

EXTERIOR OPENING NON–LOAD BEARING METAL STUD SCHEDULE H≤

OPENING SIZE	No. OF JAMB STUDS	NOTES	HEAD DETAIL	SILL DETAIL	CONNX TO STRUC	BOTTOM TRACK DETAIL
≤ 3'–4"	(2) 800S162–54	7	C		10S4.15	9S4.15
≤ 10'–0"	(2) 800S162–54	7	2S4.16		10S4.15	9S4.15
7'–0" < W ≤ 10'–0"	(2) 800S200–68	8	2S4.16	2S4.16	(2) 10S4.15	9S4.15

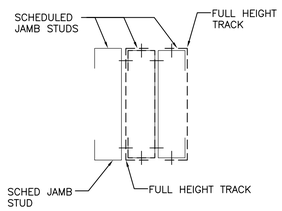

NOTE: JACK STUD NOT SHOWN FOR CLARITY

DETAIL A

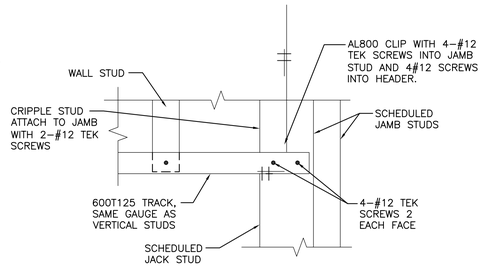

DETAIL B

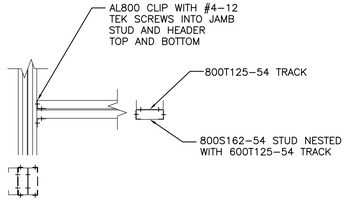

DETAIL C

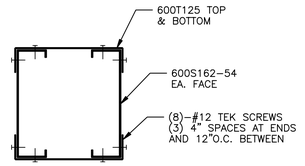

NOTE:
CONNECT TO STUD AT JAMB WITH L2x2x12Ga x 0'–6" WITH (5)–#12 SCREWS 1" GAGE TYP TOP AND BOTTOM, SEE DETAIL 12S4.15

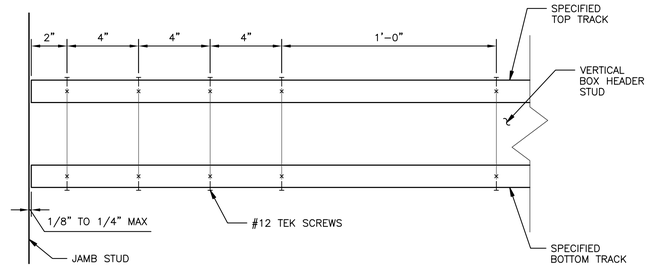

BOX HEADER ELEVATION

1 TYPICAL WINDOW/DOOR JAMB STUD SCHEDULE DETAIL

SCALE: 3/4" = 1'–0"

2 BOX HEADER DETAIL

SCALE: 3" = 1'–0"

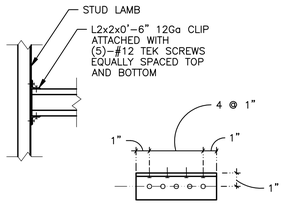

3 TYPICAL BOX HEADER CONNECTION DETAIL

SCALE: 3/4" = 1'–0"

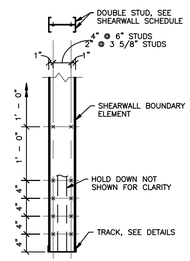

5 DOUBLE STUD BOUNDARY ELEMENT ATTACHMENT DETAIL TYPICAL DETAIL

SCALE: 3/4" = 1'–0"

VCS architects

19251 Purus Dr.
Porter, TX 77365

CONSULTANTS

Garza + McLain
www.garza-mclain.com STRUCTURAL ENGINEERS, INC.
13313 Southwest Freeway, Suite 163
Sugar Land, Texas 77478
(281) 494-1230 (voice)
(281) 494-1234 (fax)
FIRM NO.: F-9331
EXPIRATION: 5-31-2025
JOB NO.: 220170

BATES ALLEN PARK
BLACK COWBOY MUSEUM
CHARLIE ROBERTS LANE

STATE OF TEXAS
GABRIEL GARZA
90960
LICENSED
PROFESSIONAL ENGINEER
06-03-24

Drawing Date: 06/03/2024
Drawn By: SMA
Checked By: DDV
Scale: AS NOTED

Revisions:

DESCRIPTION	
100% CD'S	06/03/2024

Drawing Name

TYPICAL WALL DETAILS

S4.16

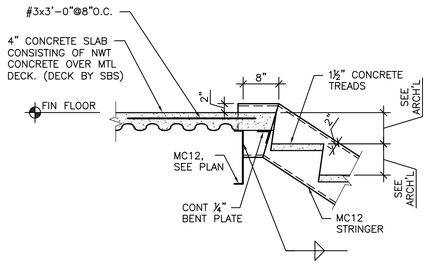

1 DETAIL

SCALE: 3/4" = 1'-0"

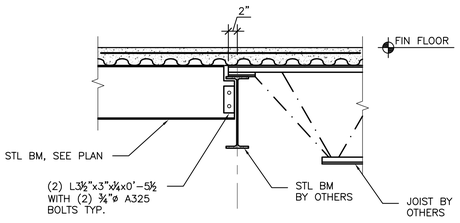

2 DETAIL

SCALE: 3/4" = 1'-0"

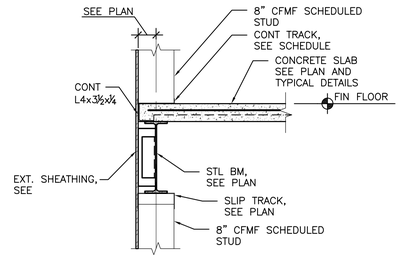

3 DETAIL

SCALE: 3/4" = 1'-0"

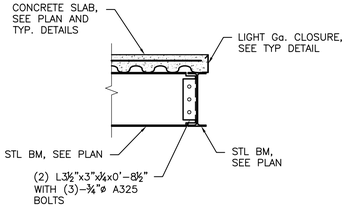

4 DETAIL

SCALE: 3/4" = 1'-0"

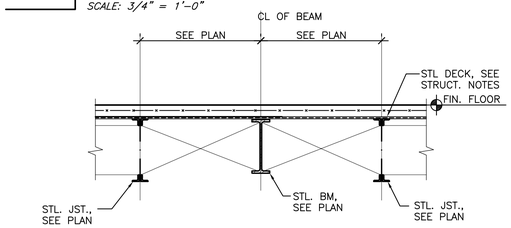

5 TYPICAL JOIST WITH BEAM PARALLEL CONDITION

SCALE: 3/4"= 1'-0"

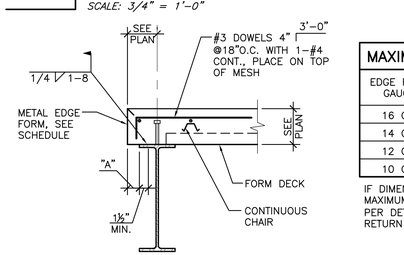

MAXIMUM SLAB OVERHANG – "A"			
EDGE FORM GAUGE	SLAB THICKNESS		
	3"	5 1/2"	6 1/2"
16 GA.	4 1/2"	3"	1 1/2"
14 GA.	6"	4 1/2"	3"
12 GA.	9 1/2"	8"	6"
10 GA.	12"	11"	9 1/2"

IF DIMENSION "A" EXCEEDS TABLE MAXIMUMS, PROVIDE ANGLE SUPPORT, PER DETAIL SC-2A. PROVIDE 1/2" RETURN LIP ON EDGE FORMS.

6 TYPICAL SLAB EDGE CONDITION DETAIL

SCALE: NTS

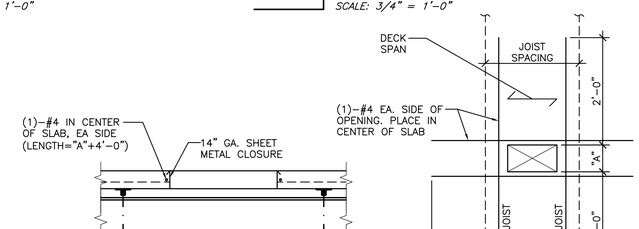

NOTES:
1. SEE PLAN FOR SLAB REINFORCEMENT NOT SHOW CLARITY.
2. COORDINATE SIZE AND LOCATIONS OF OPENINGS ARCHITECTURAL & MECHANICAL DRAWINGS.
3. MAXIMUM DIMENSION "A" (PERPENDICULAR TO DECK SPAN) SHALL BE 2'-2". FOR "A" DIMENSION GREATER THAN 2'-2", OPENING SHALL BE REFERED TO ENGINEER FOR FRAMING.
4. FIELD CUT OPENING IN METAL DECK AFTER CONCRETE SLAB HAS ATTAINED A MINIMUM OF 75% OF ITS SPECIFIED 28-DAY COMPRESSIVE STRENGTH.
5. WWF SLAB REINFORCEMENT SHALL BE CUT AROUND OPENING, WWF SHALL EXTEND TO WITHING 2" OF OPENING ON ALL SIDES.
6. PROVIDE REINFORCEMENT AS SHOWN FOR SQUARE, RECTANGULAR AND ROUND OPENINGS.

7 TYPICAL DETAIL FLOOR OPENING

SCALE: NTS

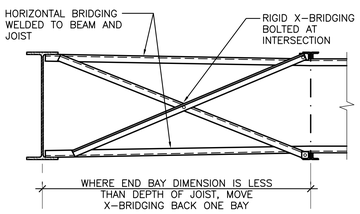

BRIDGING TO BE DESIGNED BY JOIST MANUFACTURER – REFER TO "OPEN WEB JOISTS" STRUCTURAL GENARAL NOTES

8 TYPICAL CROSS-BRIDGING AT END BAY FOR K & KCS SERIES JOISTS DETAIL

SCALE: NTS

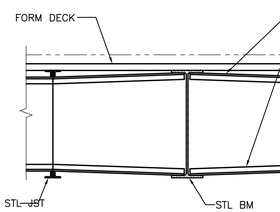

9 TYPICAL CROSS-BRIDGING CONNECTION AT BEAM PARALLEL TO JOISTS DETAIL

SCALE: NTS

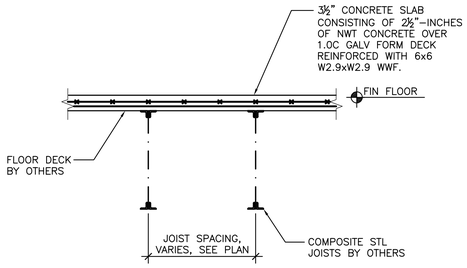

10 TYPICAL CONCRETE SLAB REINFORCEMENT DETAIL

SCALE: 3/4" = 1'-0"

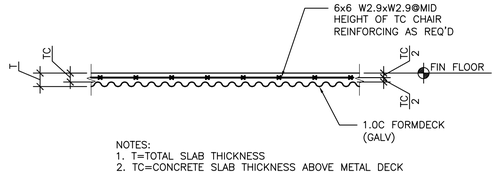

NOTES:
1. T=TOTAL SLAB THICKNESS
2. TC=CONCRETE SLAB THICKNESS ABOVE METAL DECK

11 TYPICAL DECK REINFORCEMENT PLACEMENT DETAIL

SCALE: 3/4" = 1'-0"

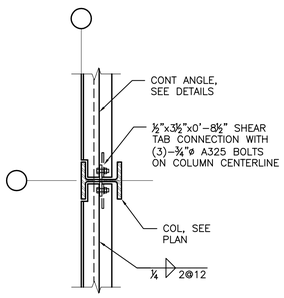

12 TYPICAL PLAN VIEW EDGE ANGLE

SCALE: 3/4" = 1'-0"

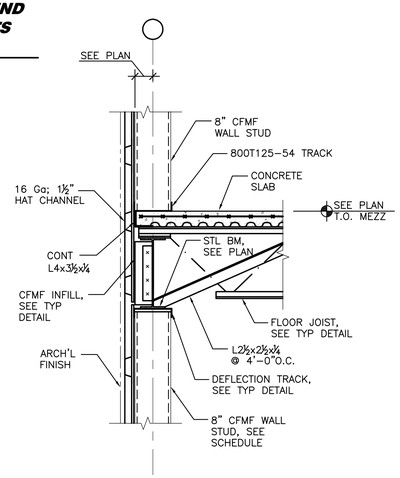

13 DETAIL

SCALE: 3/4" = 1'-0"

VCS architects

19251 Purus Dr.
Porter, TX 77365

CONSULTANTS

Garza + McLain
www.garza-mclain.com STRUCTURAL ENGINEERS, INC.
13313 Southwest Freeway, Suite 163
Sugar Land, Texas 77478
(281) 494-1230 (voice)
(281) 494-1234 (fax)
FIRM NO.: F-9331
EXPIRATION: 5-31-2025
JOB NO.: 220170

BATES ALLEN PARK
BLACK COWBOY MUSEUM
CHARLIE ROBERTS LANE

STATE OF TEXAS
GABRIEL GARZA
90960
LICENSED
PROFESSIONAL ENGINEER
06-03-24

Drawing Date: 06/03/2024
Drawn By: SMA
Checked By: DDV
Scale: AS NOTED

Revisions:

DESCRIPTION	
100% CD'S	06/03/2024

Drawing Name

TYPICAL FLOOR DETAILS

S4.20

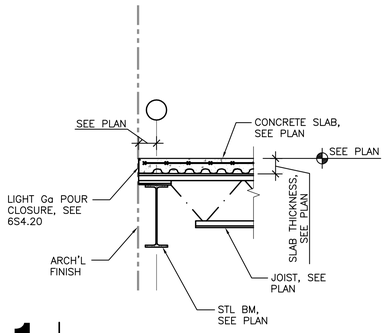

1 ***DETAIL***

SCALE: 3/4" = 1'-0"

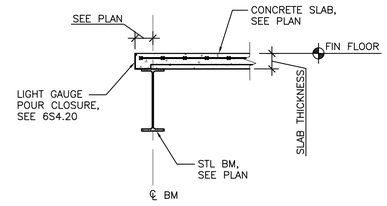

2 ***DETAIL***

SCALE: 3/4" = 1'-0"

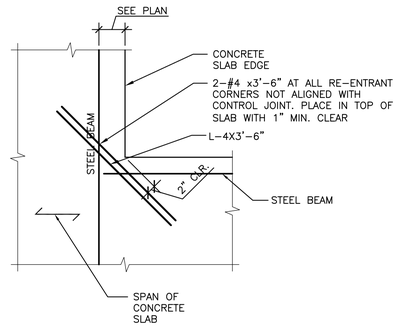

PLAN

3 ***TYPICAL CONCRETE SLAB RE-ENTRANT CORNER REINFORCING DETAIL***

SCALE: 3/4" = 1'-0"

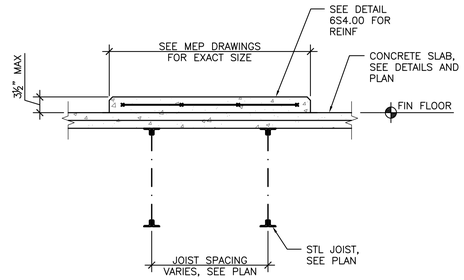

4 ***TYPICAL DETAIL HOUSE KEEPING PAD OVER ELEVATED CONCRETE SLAB***

SCALE: 3/4" = 1'-0"

VCS architects

19251 Purus Dr.
Porter, TX 77365

CONSULTANTS

Garza + McLain
www.garza-mclain.com STRUCTURAL ENGINEERS, INC.
13313 Southwest Freeway, Suite 163
Sugar Land, Texas 77478
(281) 494-1230 (voice)
(281) 494-1234 (fax)
FIRM NO.: F-9331
EXPIRATION: 5-31-2025
JOB NO.: 220170

BATES ALLEN PARK
BLACK COWBOY MUSEUM
CHARLIE ROBERTS LANE

STATE OF TEXAS
GABRIEL GARZA
90960
LICENSED
PROFESSIONAL ENGINEER
06-03-24

Drawing Date: 06/03/2024
Drawn By: SMA
Checked By: DDV
Scale: AS NOTED

Revisions:

DESCRIPTION	
100% CD'S	06/03/2024

Drawing Name

TYPICAL FLOOR DETAILS

S4.21

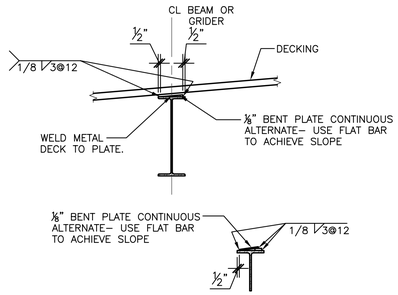

1 TYPICAL DETAIL SLOPING METAL DECK SUPPORT ON ROOF BEAM WITH VERTICAL WEB

SCALE: NTS

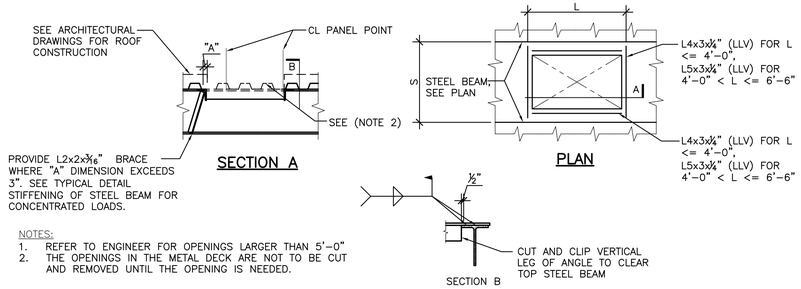

NOTES:
1. REFER TO ENGINEER FOR OPENINGS LARGER THAN 5'–0"
2. THE OPENINGS IN THE METAL DECK ARE NOT TO BE CUT AND REMOVED UNTIL THE OPENING IS NEEDED.

2 TYPICAL DETAIL ROOF OPENING, STEEL BEAM CONSTRUCTION

SCALE: NTS

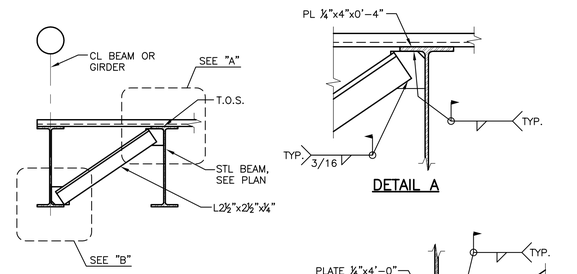

NOTES:
1. BRACE BOTTOM OF FLANGE AT ALL BEAMS WITH IN 10'–0" OF COLUMN.
2. SEE PLAN FOR OTHER LOCATIONS OF ANGLE BRACES.
3. FIELD WELDING OF 1/4" CONNECTION PLATES SHALL BE AT FABRICATOR'S OPTION.
4. ALL BRACING SHALL BE IN PLACE AND WELDED BEFORE DECK INSTALLATION.
5. BRACE SIZES SHOWN ARE TYPICAL UNLESS OTHERWISE NOTED ON PLAN.
6. SEE STRUCTURAL GENERAL NOTES FOR DECK CONSTRUCTION.

3 TYPICAL DETAIL BEAM BOTTOM FLANGE BRACE

SCALE: NTS

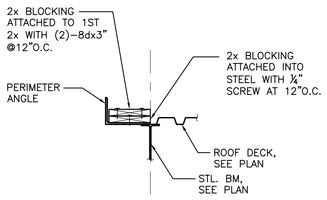

4 TYPICAL EDGE BLOCKING TO STRUCTURE DETAIL

SCALE: 3/4" = 1'–0"

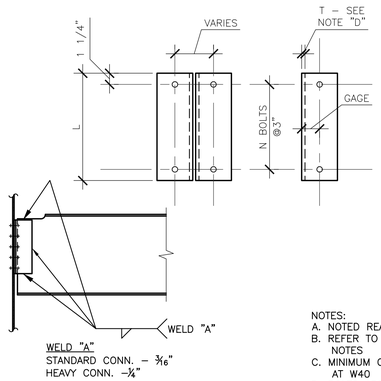

BEAM SIZE	STANDARD ANGLE LENGTH (L)	STANDARD NO. OF ROWS OF BOLTS (N)	STANDARD MAX. BEAM REACTION (KIPS)
W8	5 1/2"	2	45
W10	5 1/2"	2	48
W12	5 1/2"	3	76
W14	8 1/2"	3	76
W16	8 1/2"	4	101
W18	14 1/2"	5	125
W21	17 1/2"	6	101
W24	17 1/2"	6	160
W27	20 1/2"	7	180
W30	30"	9	318

NOTES:
A. NOTED REACTIONS ARE FOR FACTOR LOADS.
B. REFER TO "STRUCTURAL STEEL CONNECTIONS" STRUCTURAL GENERAL NOTES
C. MINIMUM CONNECTION: ANGLE THICKNESS IS 1/4" TYPICAL AND 5/16" AT W40
D. BOLTS ARE ¾"ø TYPICAL BOLTS ARE A325–N.
E. BEAM CONNECTIONS ARE "STANDARD" U.N.O. ON PLAN.
F. CONTRACTOR SHALL CHECK DESIGN OF ALL BEAMS REQUIRING COPES GREATER THAN SHOWN IN DETAIL BASED ON REACTIONS SHOWN IN TABLE. CONNECTION ANGLES, BOLTS AND WELDS SHALL NOT BE LESS THAN THAT SHOWN.

5 AISC TYPE 2 SIMPLE FRAMING CONNECTIONS

SCALE: NTS

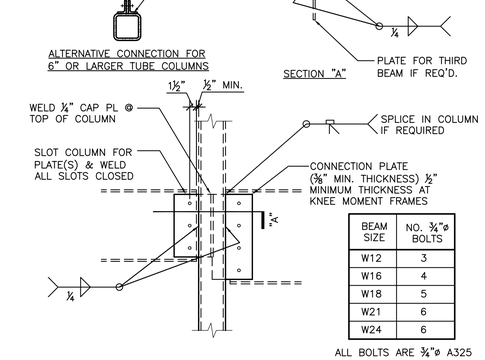

BEAM SIZE	NO. ¾"ø BOLTS
W12	3
W16	4
W18	5
W21	6
W24	6

ALL BOLTS ARE ¾"ø A325

6 TYPICAL BEAM WEB TO TUBE COLUMN CONNECTION

SCALE: NTS

VCS architects
19251 Purus Dr.
Porter, TX 77365

CONSULTANTS

Garza + McLain
www.garza-mclain.com STRUCTURAL ENGINEERS, INC.
13313 Southwest Freeway, Suite 163
Sugar Land, Texas 77478
(281) 494-1230 (voice)
(281) 494-1234 (fax)
FIRM NO.: F-9331
EXPIRATION: 5-31-2025
JOB NO.: 220170

BATES ALLEN PARK
BLACK COWBOY MUSEUM
CHARLIE ROBERTS LANE

STATE OF TEXAS
GABRIEL GARZA
90960
LICENSED PROFESSIONAL ENGINEER
06-03-24

Drawing Date: 06/03/2024
Drawn By: SMA
Checked By: DDV
Scale: AS NOTED

Revisions:

DESCRIPTION	
100% CD'S	06/03/2024

Drawing Name

STEEL DETAILS

S4.30

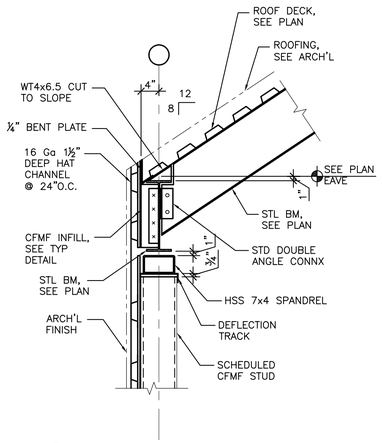

1 DETAIL

SCALE: 3/4" = 1'-0"

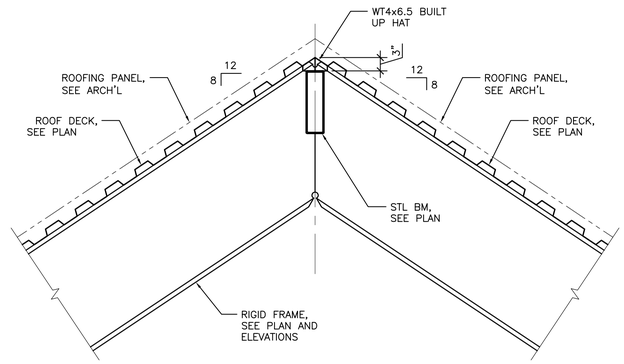

2 DETAIL

SCALE: 3/4" = 1'-0"

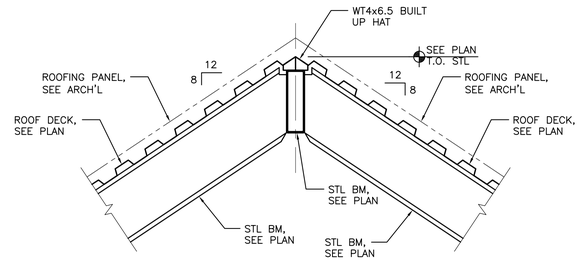

3 DETAIL

SCALE: 3/4" = 1'-0"

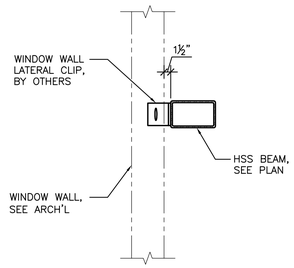

4 DETAIL

SCALE: 3/4" = 1'-0"

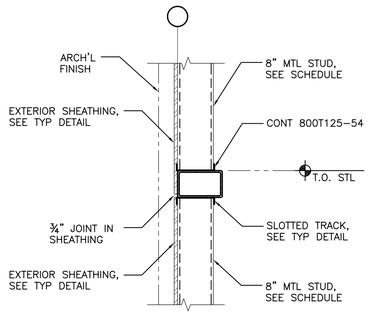

5 DETAIL

SCALE: 3/4" = 1'-0"

VCS architects

19251 Purus Dr.
Porter, TX 77365

CONSULTANTS

Garza + McLain
www.garza-mclain.com STRUCTURAL ENGINEERS, INC.
13313 Southwest Freeway, Suite 163
Sugar Land, Texas 77478
(281) 494-1230 (voice)
(281) 494-1234 (fax)
FIRM NO.: F-9331
EXPIRATION: 5-31-2025
JOB NO.: 220170

BATES ALLEN PARK
BLACK COWBOY MUSEUM
CHARLIE ROBERTS LANE

STATE OF TEXAS
GABRIEL GARZA
90960
LICENSED
PROFESSIONAL ENGINEER
06-03-24

Drawing Date: 06/03/2024
Drawn By: SMA
Checked By: DDV
Scale: AS NOTED

Revisions:

DESCRIPTION	
100% CD'S	06/03/2024

Drawing Name

ROOF DETAILS

S4.35

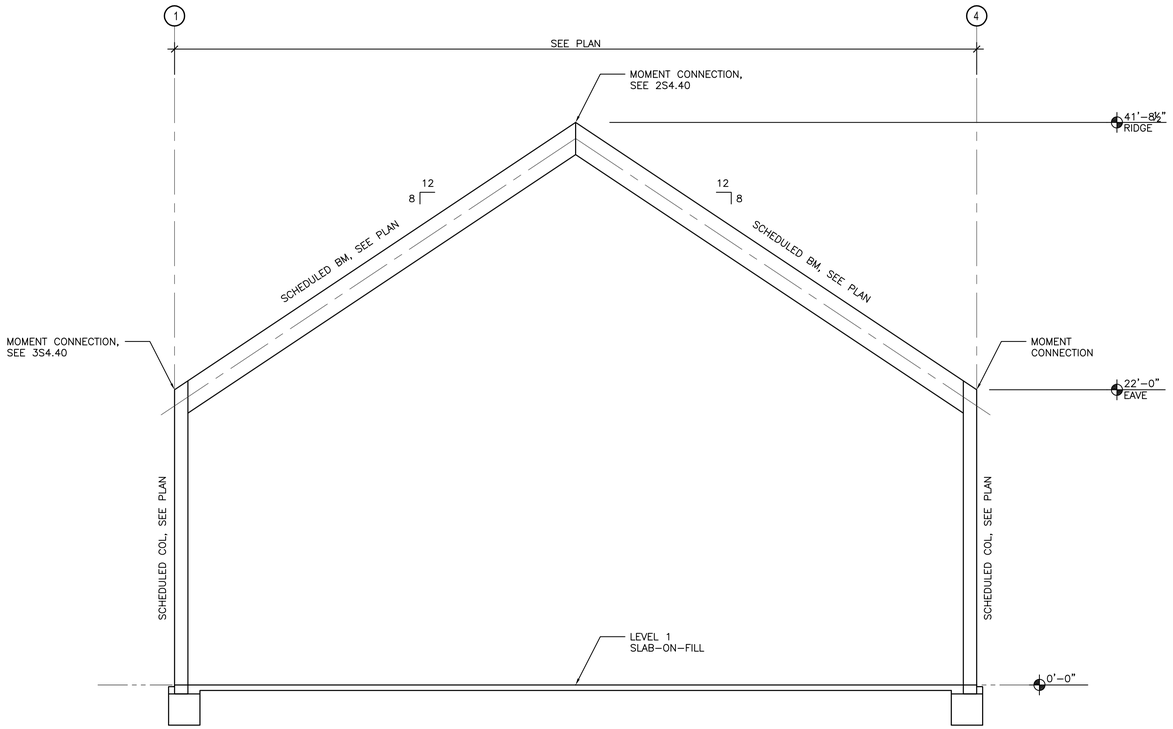

ELEVATION NOTES:
1. SEE FOR ADDITIONAL INFORMATION
2. REFER TO STRUCTURAL GENERAL NOTES.
3.

1 TYPICAL FRAME ELEVATION

SCALE: 3/16" = 1'-0"

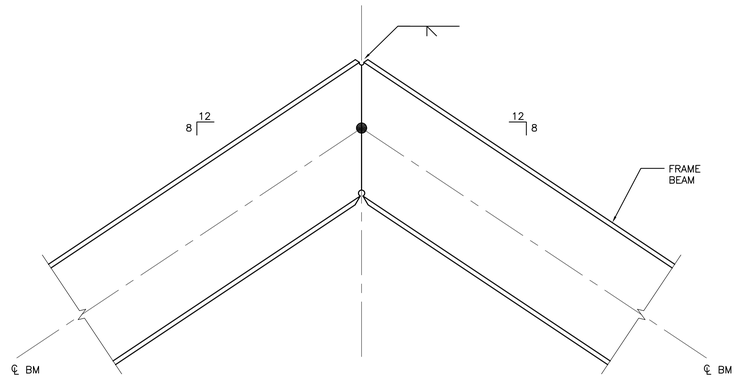

NOTE:
RIGID BEAM AND CONNECTION
NOT SHOWN FOR CLARITY

2 MOMENT CONNECTION AT RIDGE

SCALE: 3/4" = 1'-0"

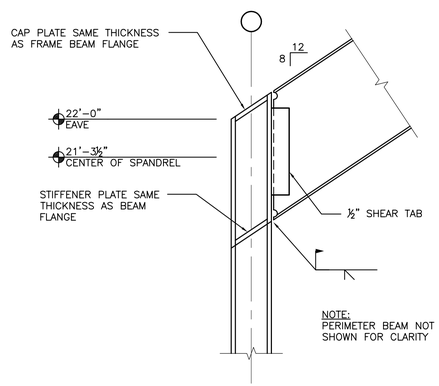

3 MOMENT CONNECTION AT EAVE

SCALE: 3/4" = 1'-0"

VCS architects

19251 Purus Dr.
Porter, TX 77365

CONSULTANTS

Garza + McLain
www.garza-mclain.com STRUCTURAL ENGINEERS, INC.
13313 Southwest Freeway, Suite 163
Sugar Land, Texas 77478
(281) 494-1230 (voice)
(281) 494-1234 (fax)
FIRM NO.: F-9331
EXPIRATION: 5-31-2025
JOB NO.: 220170

BATES ALLEN PARK
BLACK COWBOY MUSEUM
CHARLIE ROBERTS LANE

STATE OF TEXAS
GABRIEL GARZA
90960
LICENSED
PROFESSIONAL ENGINEER
06-03-24

Drawing Date: 06/03/2024
Drawn By: SMA
Checked By: DDV
Scale: AS NOTED

Revisions:

DESCRIPTION	
100% CD'S	06/03/2024

Drawing Name

STEEL FRAME DETAILS

S4.40

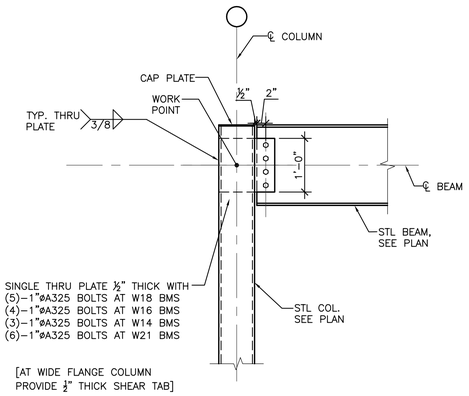

1 TYPICAL BRACED FRAME CONNECTION DETAIL

SCALE: 3/4" = 1'-0"

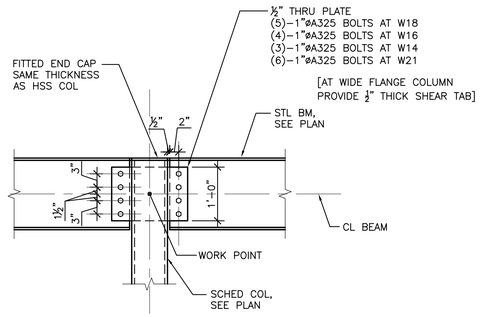

2 TYPICAL BEAM TO COLUMN CONNECTION AT KNEE MOMENT FRAME BEAM EACH SIDE

SCALE: 3/4" = 1'-0"

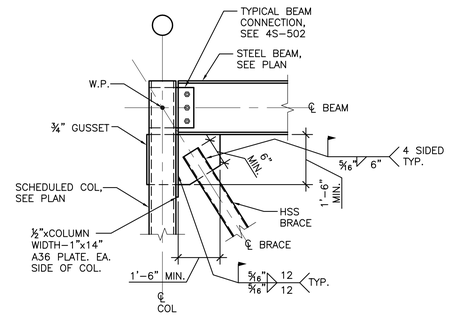

3 TYPICAL BRACED FRAME CONNECTION DETAIL SINGLE STORY

SCALE: 3/4" = 1'-0"

BRACE NOTES:
1. ALL CONNECTIONS FOR BRACES OR KNEE-MOMENT FRAMES ARE TO BE DETAILED WITH BOLTED CONNECTIONS AS SHOWN WITH WORK POINT AT CENTER LINE OF BEAMS AND COLUMNS PER UNIFORM FORCE METHOD.
2. GUSSET PLATES ARE APPROXIMATE SIZES AND WILL BE FINALIZED BASED ON GEOMETRY IN SHOP DRAWINGS. NO COST SHALL BE BACK CHARGED FOR BRACE RED LINES.
3. GARZA + MCLAIN IS EOR AND CONNECTION DESIGNER.

4 TYPICAL BRACE CONNECTION NOTES

SCALE: 3/4" = 1'-0"

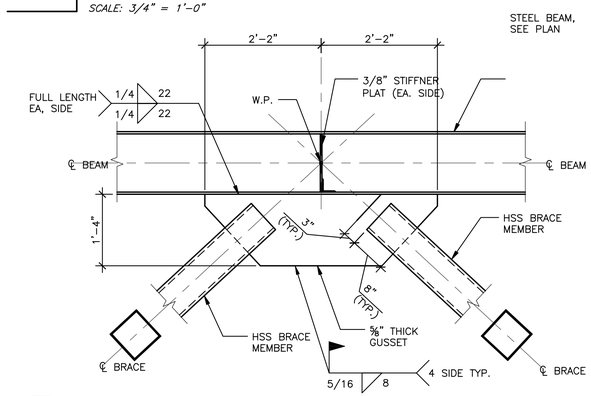

5 DETAIL

SCALE: 3/4" = 1'-0"

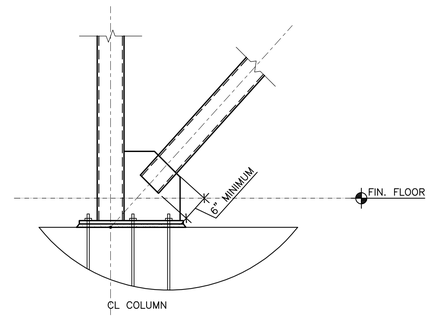

NOTES:
1. SEE COLUMN SCHEDULE, PLANS, OR DETAILS FOR ELEVATION OF BASE PLATE
2. MINIMUM FILLET WELD ACCORDING TO AISC SPECIFICATIONS 1/4" MIN)
3. REFER TO BRACE ELEVATIONS AND BRACE NOTES FOR FORCES AND CONNECTION DESIGN CRITERIA
4. GUSSET PLATE AT CENTER OF COLUMN. SIZE AS REQUIRED TO DEVELOP BRACE FORCE
5. MINIMUM GROUT IS 1" UNLESS NOTED OTHERWISE ON PLANS, DETAILS OR IN GROUT THICKNESS SCHEDULE

6 TYPICAL BRACE AT BASE DETAIL

SCALE: 3/4" = 1'-0"

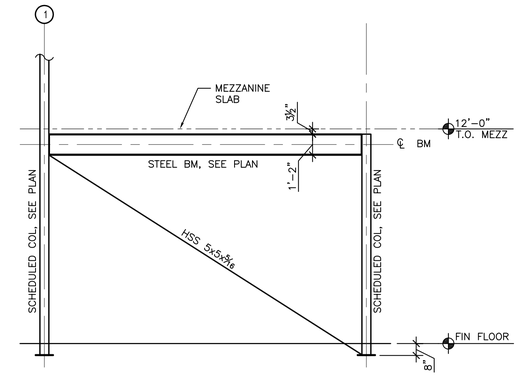

7 BRACE 1 ELEVATION

SCALE: 1/4" = 1'-0"

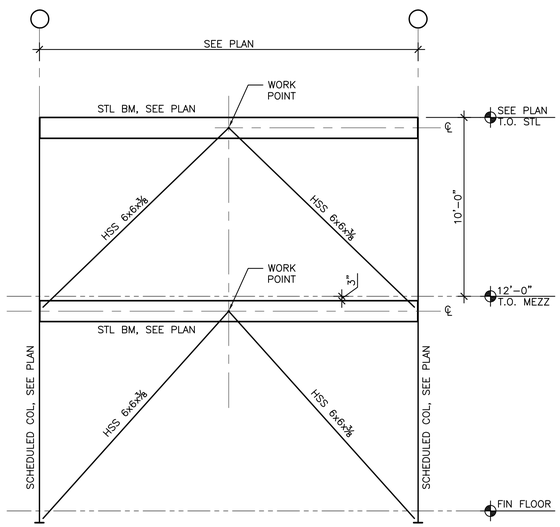

8 BRACE 2 ELEVATION

SCALE: 1/4" = 1'-0"

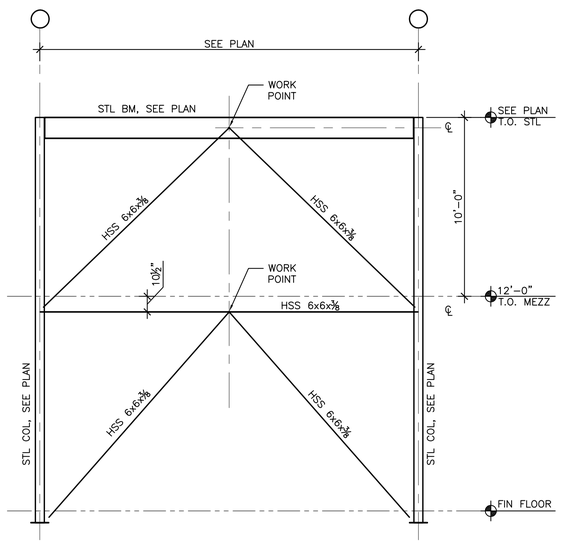

9 BRACE 3 ELEVATION

SCALE: 1/4" = 1'-0"

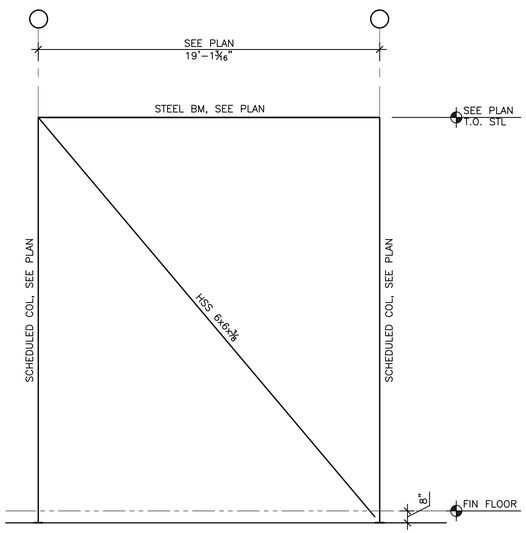

10 BRACE 4 ELEVATION

SCALE: 1/4" = 1'-0"

19251 Purus Dr.
Porter, TX 77365

CONSULTANTS

Garza + McLain
www.garza-mclain.com STRUCTURAL ENGINEERS, INC.
13313 Southwest Freeway, Suite 163
Sugar Land, Texas 77478
(281) 494-1230 (voice)
(281) 494-1234 (fax)
FIRM NO.: F-9331
EXPIRATION: 5-31-2025
JOB NO.: 220170

BATES ALLEN PARK
BLACK COWBOY MUSEUM
CHARLIE ROBERTS LANE

STATE OF TEXAS
GABRIEL GARZA
90960
LICENSED
PROFESSIONAL ENGINEER
06-03-24

Drawing Date: 06/03/2024
Drawn By: SMA
Checked By: DDV
Scale: AS NOTED

Revisions:

DESCRIPTION	
100% CD'S	06/03/2024

Drawing Name

BRACE ELEVATION DETAILS

S4.41

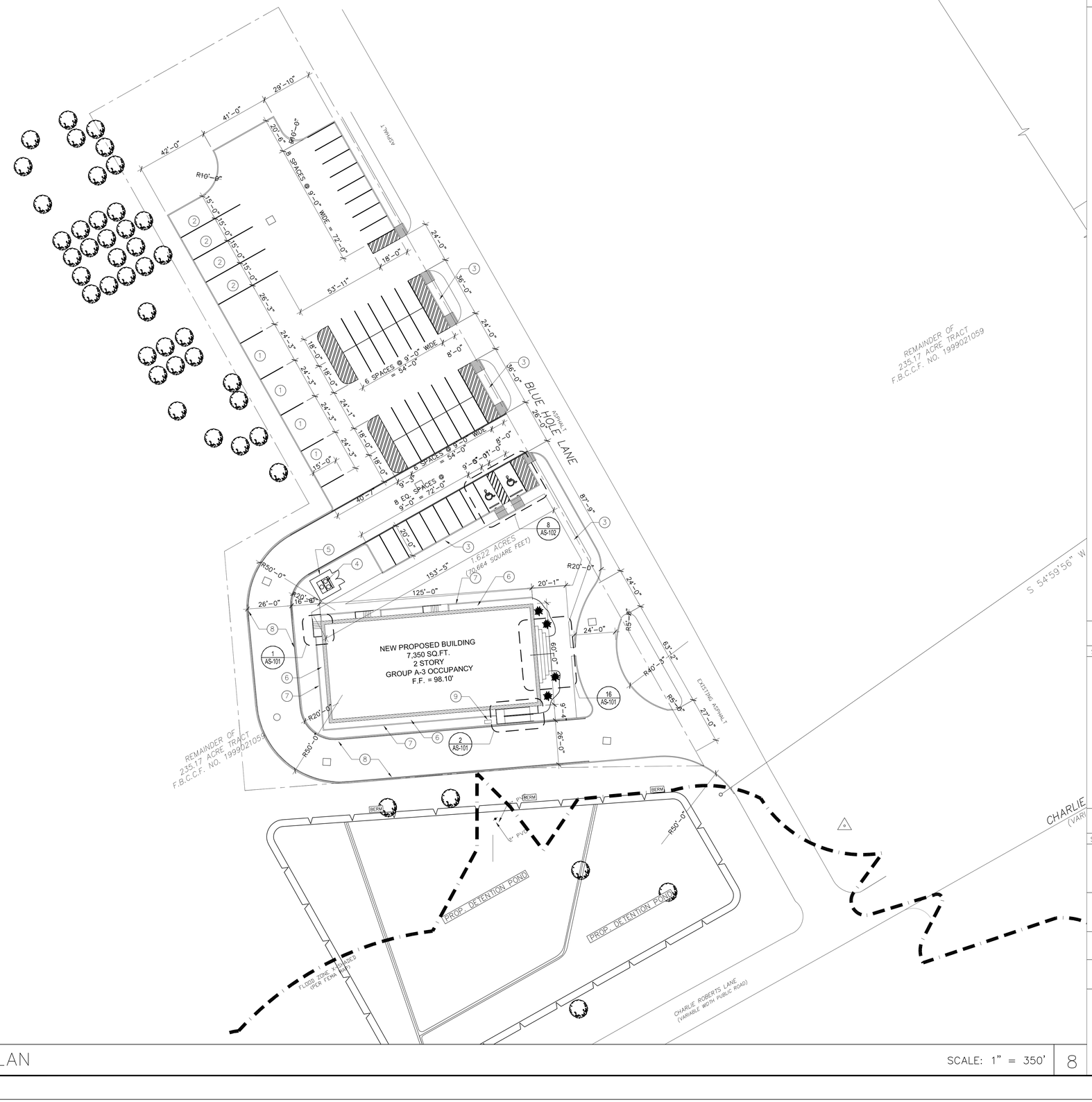

OVERALL SITE PLAN

SCALE: 1" = 350'

8

GENERAL NOTES

A. CONTRACTOR TO PROTECT ALL ITEMS THAT ARE NOT PART OF DEMOLITION.

B. VERIFY LOCATION OF ALL EXISTING UTILITIES PRIOR TO COMMENCEMENT OF ANY DEMOLITION ACTIVITIES.

C. CONTRACTOR SHALL VERIFY ALL DIMENSIONS AND CONDITIONS IN THE FIELD PRIOR TO CONSTRUCTION. ANY DISCREPANCIES SHOULD BE BROUGHT TO THE ATTENTION OF THE ARCHITECT AND OWNER PRIOR TO CONSTRUCTION AND/OR MATERIALS PROCUREMENT.

D. AFTER COMPLETION OF ALL WORK, THE CONSTRUCTION SITE SHALL BE CLEARED OF ALL EXCESS MATERIALS, DEBRIS AND TRASH. THESE ARE O BE DISPOSED AND RECYCLED IN ACCORDANCE WITH THE CITY OF HOUSTON REGULATIONS. ALL NEW FINISHES SHALL BE CLEANED PRIOR TO OCCUPANCY BY OWNER.

E. THE CONTRACTOR SHALL PATCH, REPAIR OR REPLACE ALL DAMAGED OR EXPOSED SURFACES DUE TO CONTRACT WORK. ALL NEWLY INSTALLED, PATCHED WORK AND ALL AFFECTED AREAS SHALL BE PAINTED OR FINISHED AS INDICATED. ALL WORK SHALL BE PERFORMED TO COVER THE ENTIRE HORIZONTAL OR VERTICAL SURFACE TO THE CLOSEST CORNER IN ALL FOUR DIRECTIONS TO MATCH EXISTING CONDITIONS.

F. CONTRACTOR SHALL COMPLY WITH THE RULES AND REGULATIONS OF THE BUILDING AS TO THE HOURS OF AVAILABILITY OF LOADING DOCKS AND ELEVATORS FOR THE PURPOSES OF DELIVERY AND ALSO AS TO THE MANNER OF HANDLING AND STORAGE AND STAGING OF MATERIALS, EQUIPMENT AND DEBRIS TO AVOID CONFLICT AND INTERFERENCE WITH NORMAL BUILDING OPERATIONS.

G. THE CONTRACTOR SHALL MAINTAIN A CURRENT AND COMPLETE SET OF CONSTRUCTION DOCUMENTS AND APPROVED SUBMITTALS ON THE CONSTRUCTION SITE DURING ALL PHASES OF CONSTRUCTION.

H. ALL WORK SHALL BE PERFORMED BY SKILLED AND QUALIFIED WORKMEN IN ACCORDANCE WITH THE BEST PRACTICES OF THE TRADES INVOLVED AND IN COMPLIANCE WITH BUILDING REGULATIONS AND/OR GOVERNMENTAL LAWS, STATUES OR ORDINANCES.

I. THE ARCHITECT SHALL NOT HAVE CONTROL OVER OR CHARGE OF, NOR BE RESPONSIBLE FOR, THE CONSTRUCTION MEANS, METHODS, TECHNIQUES, SEQUENCES OR PROCEDURES, OR FOR SAFETY PRECAUTIONS AND PROGRAMS IN CONNECTION WITH THE WORK, SINCE THESE ARE SOLELY THE CONTRACTOR'S RIGHTS AND RESPONSIBILITIES. THE ARCHITECT SHALL NOT BE RESPONSIBLE FOR THE CONTRACTOR'S FAILURE TO PERFORM THE WORK IN ACCORDANCE WITH THE REQUIREMENTS OF THE CONSTRUCTION DOCUMENTS. THE ARCHITECT SHALL NOT HAVE CONTROL OVER OR CHARGE OF AND SHALL NOT BE RESPONSIBLE FOR ACTS OR OMISSIONS OF THE CONTRACTOR, SUBCONTRACTORS, OR THEIR AGENTS OR EMPLOYEES OR OF ANY OTHER PERSONS OR ENTITIES PERFORMING PORTIONS OF THE WORK. THE TERM "WORK" MEANS THE CONSTRUCTION AND SERVICES REQUIRED BY THE CONSTRUCTION DOCUMENTS, AND INCLUDES ALL OTHER LABOR, MATERIALS, EQUIPMENT AND SERVICES PROVIDED, OR TO BE PROVIDED, BY THE CONTRACTOR TO FULFILL THE CONTRACTOR'S OBLIGATIONS.

J. ALL WORK IS TO CONFORM TO THE DRAWINGS AND SPECIFICATIONS. IN THE CASE OF CONFLICTS BETWEEN OR WITHIN THE CONSTRUCTION DOCUMENTS, THE CONTRACTOR SHALL REQUEST IN WRITING AN INTERPRETATION FROM THE ARCHITECT.

K. THE CONSTRUCTION DOCUMENTS ARE STRICTLY A GRAPHIC REPRESENTATION AND ARE NOT TO BE SCALED. WRITTEN DIMENSIONS SHALL ALWAYS GOVERN, AND SCALE DETAILS SHALL GOVERN OVER SMALL SCALE PLANS. IF A DISCREPANCY IS FOUND TO EXIST BETWEEN SCALED AND WRITTEN DIMENSIONS OR BETWEEN LARGE SCALE DETAILS AND SMALL SCALE PLANS, THE CONTRACTOR SHALL NOTIFY THE ARCHITECT IMMEDIATELY.

L. ALL WORK SHALL BE IN COMPLIANCE WITH ALL LOCAL BUILDING CODES AND ORDINANCES, AND THE REGULATIONS OF ALL FEDERAL, STATE, AND MUNICIPAL AUTHORITIES HAVING JURISDICTION. THE CONTRACTOR SHALL BE RESPONSIBLE FOR OBTAINING ALL NECESSARY PERMITS, INSPECTIONS AND APPROVALS.

M. THE CONTRACTOR SHALL VISIT THE SITE, BECOME FAMILIAR WITH LOCAL CONDITIONS UNDER WHICH THE WORK IS TO BE PERFORMED, AND CORRELATE PERSONAL OBSERVATIONS WITH THE REQUIREMENTS OF THE CONSTRUCTION DOCUMENTS. THE CONTRACTOR IS RESPONSIBLE FOR VERIFYING THE LOCATIONS OF ALL EXISTING CONDITIONS INCLUDING UTILITIES, SANITARY, AND SEWER. THE ARCHITECT SHALL BE NOTIFIED OF ANY DISCREPANCY BETWEEN FIELD CONDITIONS AND DRAWING INDICATIONS. ALL DIMENSIONS TO EXISTING SITE ELEMENTS ARE TO BE FILED VERIFIED. THE ARCHITECT SHALL BE NOTIFIED OF ANY DISCREPANCY BETWEEN FIELD DIMENSIONS AND DRAWING DIMENSIONS.

KEY NOTES

SYMBOL	DESCRIPTION
1	SPACE DESIGNATED FOR FOOD TRUCKS.
2	SPACE DESIGNATED FOR SCHOOL BUSES.
3	NEW 5'-0" CONC. SIDEWALK.
4	HVAC UNITS, RE: MEP FOR ADDITIONAL INFORMATION.
5	6'-0" TALL WOOD FENCE.
6	SLOPED LANDSCAPED AREA.
7	6" TALL RETAINING WALL.
8	FIRE LANE. STRIPING TO BE DONE IN ACCORDANCE WITH COUNTY STANDARDS.
9	FDC CONNECTION, RE: CIVIL FOR ADDITIONAL INFORMATION.

FLOOR PLAN LEGEND

SYMBOL	DESCRIPTION
1 / A-307	BUILDING SECTION TAG WALL SECTION TAG
1 / A-201	EXTERIOR ELEVATION TAG
1 / A-211	INTERIOR ELEVATION TAG
1 / A-431	PLAN REFERENCE TAG

PLAN NORTH

TRUE NORTH

architects

19251 Purus Dr.
Porter, TX 77365

CONSULTANTS

BATES ALLEN PARK
BLACK COWBOY MUSEUM
630 CHARLIE ROBERTS LANE

REGISTERED ARCHITECT
STATE OF TEXAS

9/20/24

Drawing Date: 06/03/2024
Drawn By: SMA
Checked By: DDV
Scale: AS NOTED

Revisions:

DESCRIPTION	
ISSUE FOR BID & CONSTRUCTION	09/23/2024

Drawing Name

OVERALL SITE PLAN

AS-100

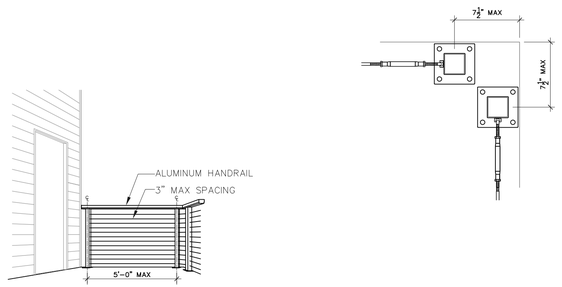

MAINTAIN 5'-0" MAX SPACING
BETWEEN POSTS TO MINIMIZE CABLE DEFLECTION

NOTE: BUILDING CODES VARY BY CITY & COUNTY. FOLLOWING THE INSTALLATION AND RAILING DESIGN INSTRUCTION AS DETAILED IN THIS DRAWING DOES NOT GUARANTEE CODE COMPLIANCE IN ALL AREAS. BEFORE STARING THE PROJECT, CHECK WITH LOCAL REQUIREMENT FOR USING AND INSTALLING CABLE RAILINGS.

GUARDRAIL DETAIL SCALE: 1/4" = 1'-0" 13

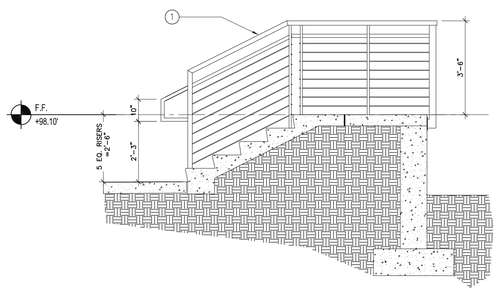

STAIR SECTION SCALE: 3/8" = 1'-0" 5

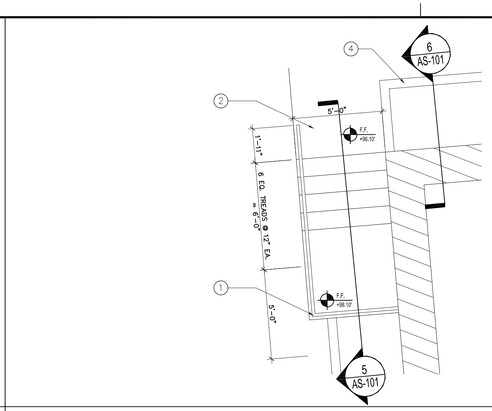

ENLARGED STAIR PLAN SCALE: 1/4" = 1'-0" 1

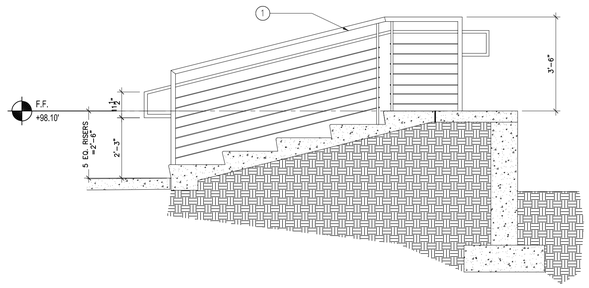

RAMP SECTION SCALE: 3/8" = 1'-0" 14

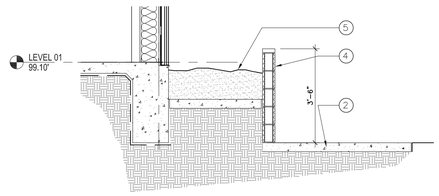

RAMP SECTION SCALE: 3/8" = 1'-0" 6

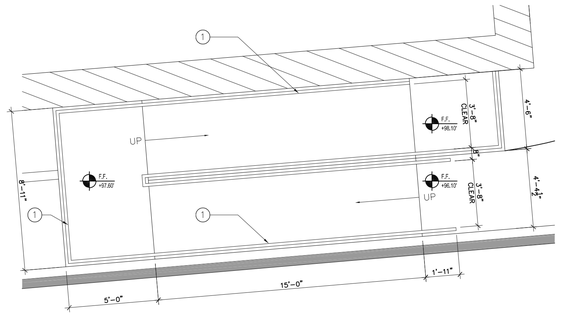

ENLARGED RAMP PLAN SCALE: 1/4" = 1'-0" 2

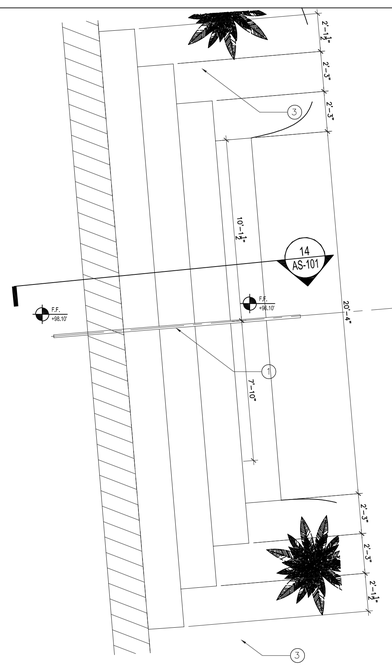

ENLARGED STAIR PLAN SCALE: 1/4" = 1'-0" 16

ITEM NO.	PART NUMBER	DESCRIPTION	QTY.
1	03-009-01	BASE PLATE	2
2	03-001-01	TERMINAL POST (6005 TS ALUM.)	2
3	03-004-01	RECTANGULAR TOP RAIL (6082 T6 ALUM.)	1
4	03-006-01	TOP RAIL SNAP COVER (6082 T6 ALUM.)	1
5	03-005-01	RECTANGULAR RAIL END	1
6	Mirror03-005-01	RECTANGULAR RAIL END (ADC12 ALUM.)	1
7	01-0085-01 OR 01-028S-01	FIELD THREADED TERMINAL	11
8	01-0008-01 OR 01-028-01	FIELD THREADED TENSIONER	11
9	Stainless Cable	1/8" or 3/16" DIA.	11
10	Stainless Washer	STD	22
11	Stainless Hex Nut	STD	22
12	Stainless Acorn Nut	STD	22
13	6-32 SS TYPE	STD	4
14	1/4-20x2 1/2 PHIL FH T/F 410 SS	STD	8
15	LAG BOLT	STD	8

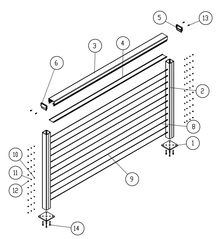

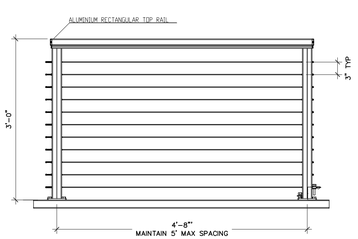

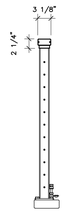

GUARDRAIL DETAILS SCALE: 3/4" = 1'-0" 4

GENERAL NOTES

A. CONTRACTOR TO PROTECT ALL ITEMS THAT ARE NOT PART OF DEMOLITION.

B. VERIFY LOCATION OF ALL EXISTING UTILITIES PRIOR TO COMMENCEMENT OF ANY DEMOLITION ACTIVITIES.

C. CONTRACTOR SHALL VERIFY ALL DIMENSIONS AND CONDITIONS IN THE FIELD PRIOR TO CONSTRUCTION. ANY DISCREPANCIES SHOULD BE BROUGHT TO THE ATTENTION OF THE ARCHITECT AND OWNER PRIOR TO CONSTRUCTION AND/OR MATERIALS PROCUREMENT.

D. AFTER COMPLETION OF ALL WORK, THE CONSTRUCTION SITE SHALL BE CLEARED OF ALL EXCESS MATERIALS, DEBRIS AND TRASH. THESE ARE O BE DISPOSED AND RECYCLED IN ACCORDANCE WITH THE CITY OF HOUSTON REGULATIONS. ALL NEW FINISHES SHALL BE CLEANED PRIOR TO OCCUPANCY BY OWNER.

E. THE CONTRACTOR SHALL PATCH, REPAIR OR REPLACE ALL DAMAGED OR EXPOSED SURFACES DUE TO CONTRACT WORK. ALL NEWLY INSTALLED, PATCHED WORK AND ALL AFFECTED AREAS SHALL BE PAINTED OR FINISHED AS INDICATED. ALL WORK SHALL BE PERFORMED TO COVER THE ENTIRE HORIZONTAL OR VERTICAL SURFACE TO THE CLOSEST CORNER IN ALL FOUR DIRECTIONS TO MATCH EXISTING CONDITIONS.

F. CONTRACTOR SHALL COMPLY WITH THE RULES AND REGULATIONS OF THE BUILDING AS TO THE HOURS OF AVAILABILITY OF LOADING DOCKS AND ELEVATORS FOR THE PURPOSES OF DELIVERY AND ALSO AS TO THE MANNER OF HANDLING AND STORAGE AND STAGING OF MATERIALS, EQUIPMENT AND DEBRIS TO AVOID CONFLICT AND INTERFERENCE WITH NORMAL BUILDING OPERATIONS.

G. THE CONTRACTOR SHALL MAINTAIN A CURRENT AND COMPLETE SET OF CONSTRUCTION DOCUMENTS AND APPROVED SUBMITTALS ON THE CONSTRUCTION SITE DURING ALL PHASES OF CONSTRUCTION.

H. ALL WORK SHALL BE PERFORMED BY SKILLED AND QUALIFIED WORKMEN IN ACCORDANCE WITH THE BEST PRACTICES OF THE TRADES INVOLVED AND IN COMPLIANCE WITH BUILDING REGULATIONS AND/OR GOVERNMENTAL LAWS, STATUES OR ORDINANCES.

I. THE ARCHITECT SHALL NOT HAVE CONTROL OVER OR CHARGE OF, NOR BE RESPONSIBLE FOR, THE CONSTRUCTION MEANS, METHODS, TECHNIQUES, SEQUENCES OR PROCEDURES, OR FOR SAFETY PRECAUTIONS AND PROGRAMS IN CONNECTION WITH THE WORK, SINCE THESE ARE SOLELY THE CONTRACTOR'S RIGHTS AND RESPONSIBILITIES. THE ARCHITECT SHALL NOT BE RESPONSIBLE FOR THE CONTRACTOR'S FAILURE TO PERFORM THE WORK IN ACCORDANCE WITH THE REQUIREMENTS OF THE CONSTRUCTION DOCUMENTS. THE ARCHITECT SHALL NOT HAVE CONTROL OVER OR CHARGE OF AND SHALL NOT BE RESPONSIBLE FOR ACTS OR OMISSIONS OF THE CONTRACTOR, SUBCONTRACTORS, OR THEIR AGENTS OR EMPLOYEES OR OF ANY OTHER PERSONS OR ENTITIES PERFORMING PORTIONS OF THE WORK. THE TERM "WORK" MEANS THE CONSTRUCTION AND SERVICES REQUIRED BY THE CONSTRUCTION DOCUMENTS, AND INCLUDES ALL OTHER LABOR, MATERIALS, EQUIPMENT AND SERVICES PROVIDED, OR TO BE PROVIDED, BY THE CONTRACTOR TO FULFILL THE CONTRACTOR'S OBLIGATIONS.

J. ALL WORK IS TO CONFORM TO THE DRAWINGS AND SPECIFICATIONS. IN THE CASE OF CONFLICTS BETWEEN OR WITHIN THE CONSTRUCTION DOCUMENTS, THE CONTRACTOR SHALL REQUEST IN WRITING AN INTERPRETATION FROM THE ARCHITECT.

K. THE CONSTRUCTION DOCUMENTS ARE STRICTLY A GRAPHIC REPRESENTATION AND ARE NOT TO BE SCALED. WRITTEN DIMENSIONS SHALL ALWAYS GOVERN, AND SCALE DETAILS SHALL GOVERN OVER SMALL SCALE PLANS. IF A DISCREPANCY IS FOUND TO EXIST BETWEEN SCALED AND WRITTEN DIMENSIONS OR BETWEEN LARGE SCALE DETAILS AND SMALL SCALE PLANS, THE CONTRACTOR SHALL NOTIFY THE ARCHITECT IMMEDIATELY.

L. ALL WORK SHALL BE IN COMPLIANCE WITH ALL LOCAL BUILDING CODES AND ORDINANCES, AND THE REGULATIONS OF ALL FEDERAL, STATE, AND MUNICIPAL AUTHORITIES HAVING JURISDICTION. THE CONTRACTOR SHALL BE RESPONSIBLE FOR OBTAINING ALL NECESSARY PERMITS, INSPECTIONS AND APPROVALS.

M. THE CONTRACTOR SHALL VISIT THE SITE, BECOME FAMILIAR WITH LOCAL CONDITIONS UNDER WHICH THE WORK IS TO BE PERFORMED, AND CORRELATE PERSONAL OBSERVATIONS WITH THE REQUIREMENTS OF THE CONSTRUCTION DOCUMENTS. THE CONTRACTOR IS RESPONSIBLE FOR VERIFYING THE LOCATIONS OF ALL EXISTING CONDITIONS INCLUDING UTILITIES, SANITARY, AND SEWER. THE ARCHITECT SHALL BE NOTIFIED OF ANY DISCREPANCY BETWEEN FIELD CONDITIONS AND DRAWING INDICATIONS. ALL DIMENSIONS TO EXISTING SITE ELEMENTS ARE TO BE FILED VERIFIED. THE ARCHITECT SHALL BE NOTIFIED OF ANY DISCREPANCY BETWEEN FIELD DIMENSIONS AND DRAWING DIMENSIONS.

KEY NOTES

SYMBOL	DESCRIPTION
1	42" TALL PAINTED STEEL GUARDRAIL.
2	CONC. SIDEWALK.
3	LANDSCAPE AREA, RE: LANDSCAPE FOR ADDITIONAL INFORMATION.
4	6" CMU RETAINING WALL.
5	PLANTING BED, RE: LANDSCAPE FOR ADDITIONAL INFORMATION.
6	

FLOOR PLAN LEGEND

SYMBOL	DESCRIPTION
1 / A-301	BUILDING SECTION TAG WALL SECTION TAG
1 / A-201	EXTERIOR ELEVATION TAG
1 A-211	INTERIOR ELEVATION TAG
1 / A-431	PLAN REFERENCE TAG

PLAN NORTH

TRUE NORTH

VCS architects

19251 Purus Dr.
Porter, TX 77365

CONSULTANTS

BATES ALLEN PARK
BLACK COWBOY MUSEUM
630 CHARLIE ROBERTS LANE
KENDLETON TX. 77451

REGISTERED ARCHITECT
ROSINA MARK
STATE OF TEXAS
9/20/24

Drawing Date: 06/03/2024
Drawn By: SMA
Checked By: DDV
Scale: AS NOTED

Revisions:

DESCRIPTION	
ISSUE FOR BID & CONSTRUCTION	09/23/2024

Drawing Name

ENLARGED SITE PLANS ELEVATIONS & DETAILS

AS-101

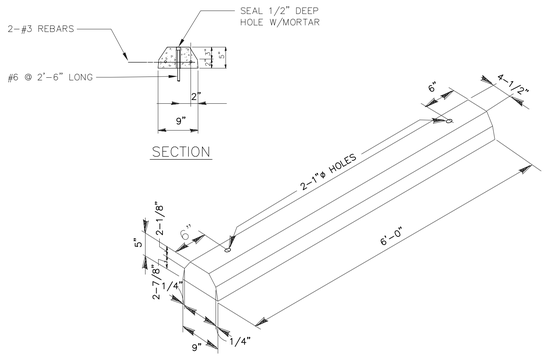

PRECAST WHEELSTOP SCALE: 3/4" = 1'–0" | 13

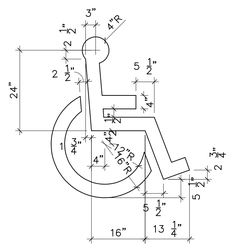

HC SYMBOL SCALE: 3/4" = 1'–0" | 5

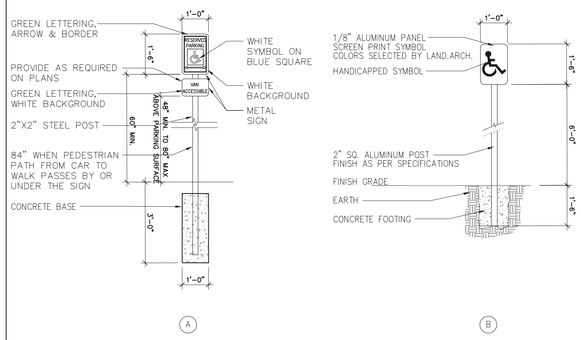

HC ACCESSIBLE SIGN SCALE: 3/8" = 1'–0" | 1

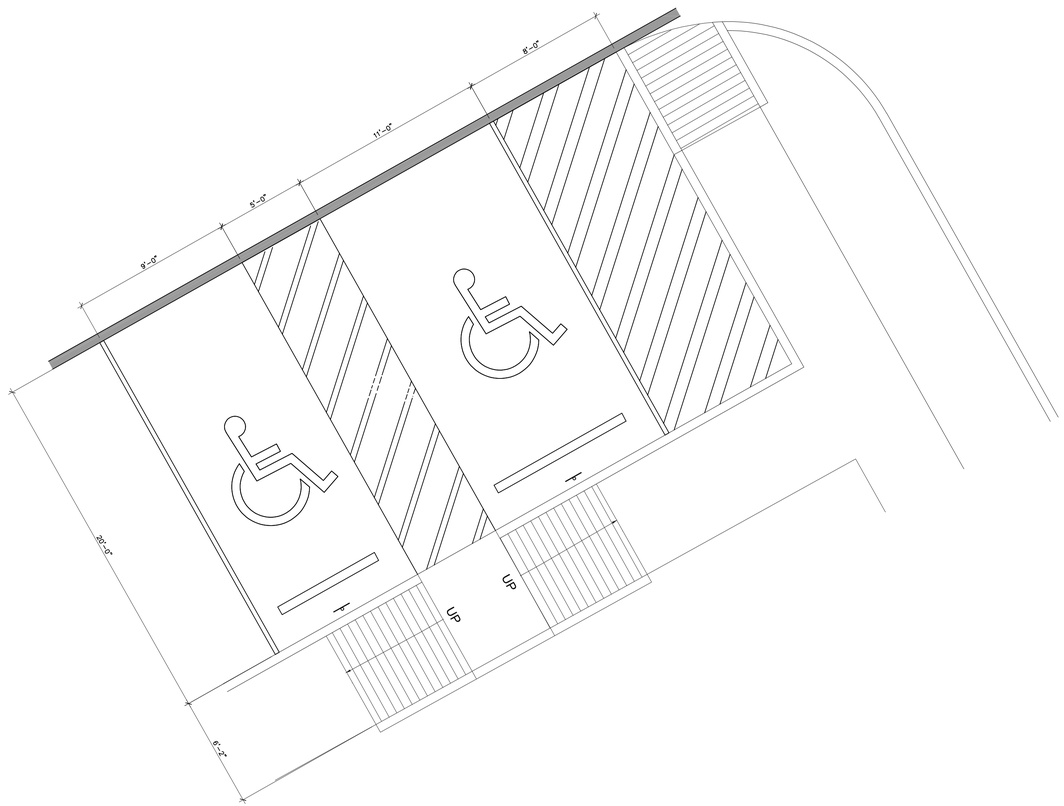

16 ENLARGED HC ACCESSIBLE PARKING PLAN SCALE: 1/4" = 1'–0" | 8

GENERAL NOTES

A. CONTRACTOR TO PROTECT ALL ITEMS THAT ARE NOT PART OF DEMOLITION.

B. VERIFY LOCATION OF ALL EXISTING UTILITIES PRIOR TO COMMENCEMENT OF ANY DEMOLITION ACTIVITIES.

C. CONTRACTOR SHALL VERIFY ALL DIMENSIONS AND CONDITIONS IN THE FIELD PRIOR TO CONSTRUCTION. ANY DISCREPANCIES SHOULD BE BROUGHT TO THE ATTENTION OF THE ARCHITECT AND OWNER PRIOR TO CONSTRUCTION AND/OR MATERIALS PROCUREMENT.

D. AFTER COMPLETION OF ALL WORK, THE CONSTRUCTION SITE SHALL BE CLEARED OF ALL EXCESS MATERIALS, DEBRIS AND TRASH. THESE ARE O BE DISPOSED AND RECYCLED IN ACCORDANCE WITH THE CITY OF HOUSTON REGULATIONS. ALL NEW FINISHES SHALL BE CLEANED PRIOR TO OCCUPANCY BY OWNER.

E. THE CONTRACTOR SHALL PATCH, REPAIR OR REPLACE ALL DAMAGED OR EXPOSED SURFACES DUE TO CONTRACT WORK. ALL NEWLY INSTALLED, PATCHED WORK AND ALL AFFECTED AREAS SHALL BE PAINTED OR FINISHED AS INDICATED. ALL WORK SHALL BE PERFORMED TO COVER THE ENTIRE HORIZONTAL OR VERTICAL SURFACE TO THE CLOSEST CORNER IN ALL FOUR DIRECTIONS TO MATCH EXISTING CONDITIONS.

F. CONTRACTOR SHALL COMPLY WITH THE RULES AND REGULATIONS OF THE BUILDING AS TO THE HOURS OF AVAILABILITY OF LOADING DOCKS AND ELEVATORS FOR THE PURPOSES OF DELIVERY AND ALSO AS TO THE MANNER OF HANDLING AND STORAGE AND STAGING OF MATERIALS, EQUIPMENT AND DEBRIS TO AVOID CONFLICT AND INTERFERENCE WITH NORMAL BUILDING OPERATIONS.

G. THE CONTRACTOR SHALL MAINTAIN A CURRENT AND COMPLETE SET OF CONSTRUCTION DOCUMENTS AND APPROVED SUBMITTALS ON THE CONSTRUCTION SITE DURING ALL PHASES OF CONSTRUCTION.

H. ALL WORK SHALL BE PERFORMED BY SKILLED AND QUALIFIED WORKMEN IN ACCORDANCE WITH THE BEST PRACTICES OF THE TRADES INVOLVED AND IN COMPLIANCE WITH BUILDING REGULATIONS AND/OR GOVERNMENTAL LAWS, STATUES OR ORDINANCES.

I. THE ARCHITECT SHALL NOT HAVE CONTROL OVER OR CHARGE OF, NOR BE RESPONSIBLE FOR, THE CONSTRUCTION MEANS, METHODS, TECHNIQUES, SEQUENCES OR PROCEDURES, OR FOR SAFETY PRECAUTIONS AND PROGRAMS IN CONNECTION WITH THE WORK, SINCE THESE ARE SOLELY THE CONTRACTOR'S RIGHTS AND RESPONSIBILITIES. THE ARCHITECT SHALL NOT BE RESPONSIBLE FOR THE CONTRACTOR'S FAILURE TO PERFORM THE WORK IN ACCORDANCE WITH THE REQUIREMENTS OF THE CONSTRUCTION DOCUMENTS. THE ARCHITECT SHALL NOT HAVE CONTROL OVER OR CHARGE OF AND SHALL NOT BE RESPONSIBLE FOR ACTS OR OMISSIONS OF THE CONTRACTOR, SUBCONTRACTORS, OR THEIR AGENTS OR EMPLOYEES OR OF ANY OTHER PERSONS OR ENTITIES PERFORMING PORTIONS OF THE WORK. THE TERM "WORK" MEANS THE CONSTRUCTION AND SERVICES REQUIRED BY THE CONSTRUCTION DOCUMENTS, AND INCLUDES ALL OTHER LABOR, MATERIALS, EQUIPMENT AND SERVICES PROVIDED, OR TO BE PROVIDED, BY THE CONTRACTOR TO FULFILL THE CONTRACTOR'S OBLIGATIONS.

J. ALL WORK IS TO CONFORM TO THE DRAWINGS AND SPECIFICATIONS. IN THE CASE OF CONFLICTS BETWEEN OR WITHIN THE CONSTRUCTION DOCUMENTS, THE CONTRACTOR SHALL REQUEST IN WRITING AN INTERPRETATION FROM THE ARCHITECT.

K. THE CONSTRUCTION DOCUMENTS ARE STRICTLY A GRAPHIC REPRESENTATION AND ARE NOT TO BE SCALED. WRITTEN DIMENSIONS SHALL ALWAYS GOVERN, AND SCALE DETAILS SHALL GOVERN OVER SMALL SCALE PLANS. IF A DISCREPANCY IS FOUND TO EXIST BETWEEN SCALED AND WRITTEN DIMENSIONS OR BETWEEN LARGE SCALE DETAILS AND SMALL SCALE PLANS, THE CONTRACTOR SHALL NOTIFY THE ARCHITECT IMMEDIATELY.

L. ALL WORK SHALL BE IN COMPLIANCE WITH ALL LOCAL BUILDING CODES AND ORDINANCES, AND THE REGULATIONS OF ALL FEDERAL, STATE, AND MUNICIPAL AUTHORITIES HAVING JURISDICTION. THE CONTRACTOR SHALL BE RESPONSIBLE FOR OBTAINING ALL NECESSARY PERMITS, INSPECTIONS AND APPROVALS.

M. THE CONTRACTOR SHALL VISIT THE SITE, BECOME FAMILIAR WITH LOCAL CONDITIONS UNDER WHICH THE WORK IS TO BE PERFORMED, AND CORRELATE PERSONAL OBSERVATIONS WITH THE REQUIREMENTS OF THE CONSTRUCTION DOCUMENTS. THE CONTRACTOR IS RESPONSIBLE FOR VERIFYING THE LOCATIONS OF ALL EXISTING CONDITIONS INCLUDING UTILITIES, SANITARY, AND SEWER. THE ARCHITECT SHALL BE NOTIFIED OF ANY DISCREPANCY BETWEEN FIELD CONDITIONS AND DRAWING INDICATIONS. ALL DIMENSIONS TO EXISTING SITE ELEMENTS ARE TO BE FILED VERIFIED. THE ARCHITECT SHALL BE NOTIFIED OF ANY DISCREPANCY BETWEEN FIELD DIMENSIONS AND DRAWING DIMENSIONS.

KEY NOTES

SYMBOL	DESCRIPTION
1	42" TALL PAINTED STEEL GUARDRAIL.
2	CONC. SIDEWALK
3	
4	
5	
6	

FLOOR PLAN LEGEND

SYMBOL	DESCRIPTION
1 / A-301	BUILDING SECTION TAG WALL SECTION TAG
1 / A-201	EXTERIOR ELEVATION TAG
1 A-211	INTERIOR ELEVATION TAG
1 / A-431	PLAN REFERENCE TAG

PLAN NORTH

TRUE NORTH

VCS architects

19251 Purus Dr.
Porter, TX 77365

CONSULTANTS

BATES ALLEN PARK
BLACK COWBOY MUSEUM
630 CHARLIE ROBERTS LANE
KENDLETON TX. 77451

REGISTERED ARCHITECT — STATE OF TEXAS — 9/20/24

Drawing Date: 06/03/2024
Drawn By: SMA
Checked By: DDV
Scale: AS NOTED

Revisions:

DESCRIPTION	
ISSUE FOR BID & CONSTRUCTION	09/23/2024

Drawing Name

ENLARGED SITE PLANS ELEVATIONS & DETAILS

AS-102

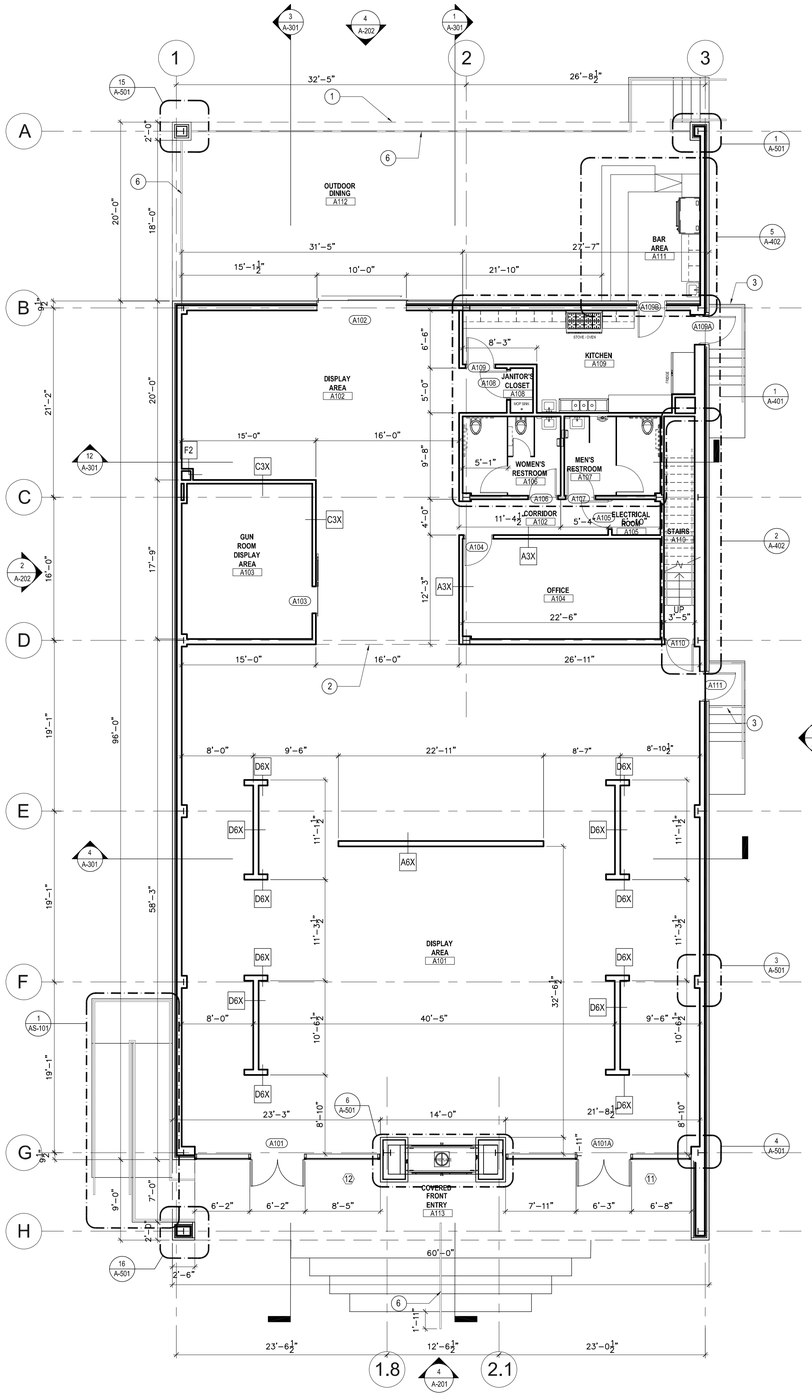

OVERALL FIRST FLOOR PLAN SCALE: 1/8"=1'-0"

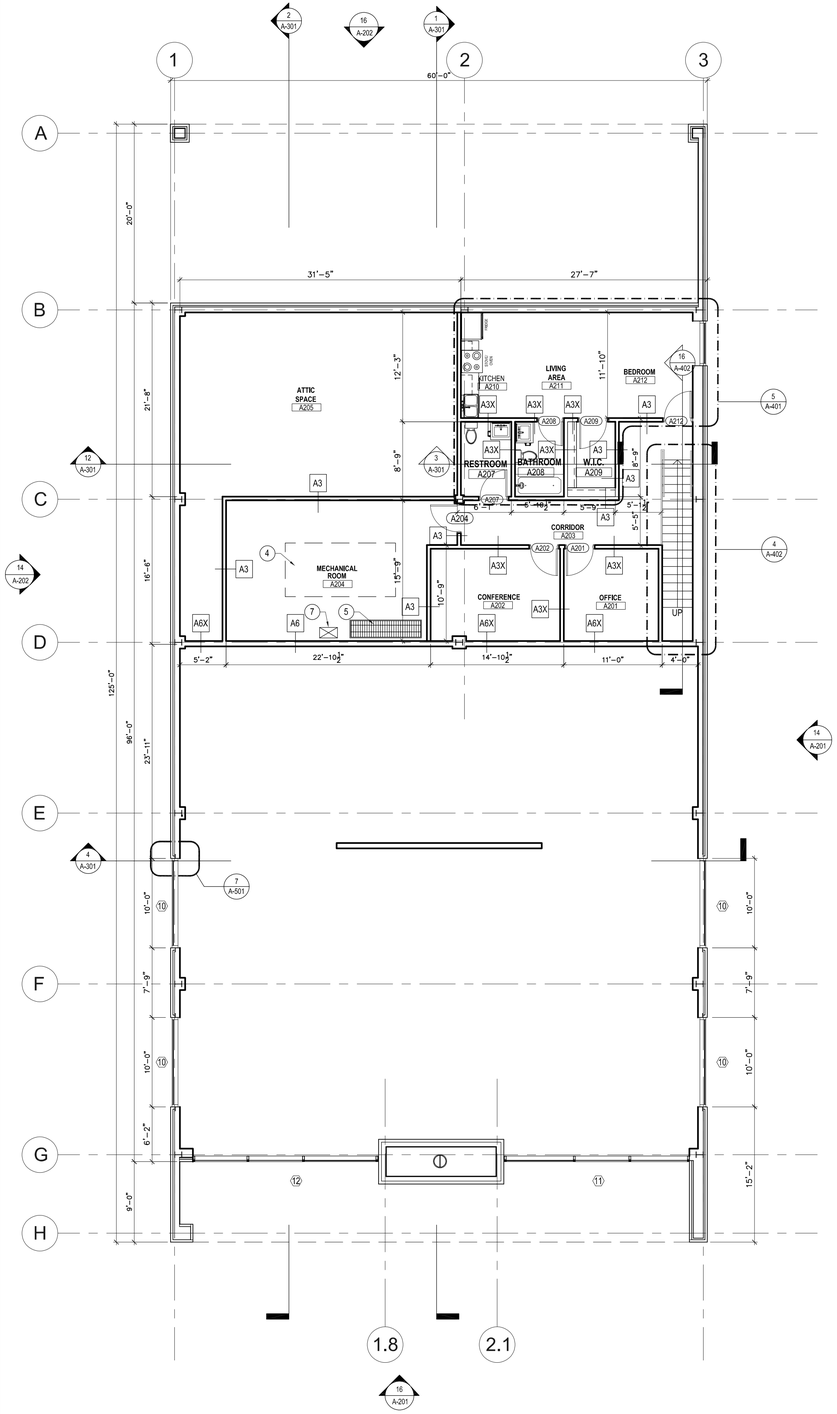

OVERALL SECOND FLOOR PLAN SCALE: 1/8"=1'-0"

FLOOR PLAN GENERAL NOTES

A. ALL UNMARKED PARTITIONS ARE TYPE A6. ALL COLUMN FURRING TO BE PARTITION TYPE F3 UNLESS NOTED OTHERWISE.

B. ALL WINDOW AND DOOR PLAN OPENINGS ARE DIMENSIONED ON AREA PLANS.

C. FOR FIRE AND LIFE SAFETY PLANS, REFER TO A-001 DRAWING.

D. REFER TO A-200 SERIES DRAWING FOR EXTERIOR ELEVATIONS, A-300 SERIES DRAWINGS FOR BUILDING SECTIONS AND WALL SECTIONS.

E. REFER TO A-600 SERIES FOR ALL PARTITIONS, DOORS, WINDOWS AND ACCESSORIES.

F. INSTALL APPROPRIATE MANUFACTURED EXPANSION JOINT COVERS AT ALL VISIBLE BUILDING EXPANSION JOINTS. TOP OF COVER OF FLOOR EXPANSION JOINT COVERS TO BE FLUSH WITH TOP OF FINISHED FLOOR.

G. ALL PARTITION DIMENSIONS ARE TAKEN FROM THE CENTERLINE OF COLUMNS AND TO THE DRYWALL FACE.

H. INSTALL BLOCKING AS REQUIRED TO SUPPORT WALL MOUNTED DEVICES.

I. AT ALL SPANDREL GLASS LOCATIONS, FACE OF INTERIOR WALL TO BE CONTINUOUS WITH ADJACENT WALL.

J. GENERAL DIMENSIONS PROVIDED ON FLOOR PLANS AND AREA PLANS DO NOT REFLECT THE ROUGH OPENING DIMENSIONS REQUIRED FOR COORDINATION WITH MASONRY JOINT COURSING. CONTRACTOR IS TO PROVIDE ROUGH OPENING FRAMING DIMENSIONS CONSISTENT WITH ENLARGED ARCHITECTURAL PLAN/SECTION DETAILS (A-500 SERIES SHEETS), AND WINDOW SCHEDULE/DETAILS (A-600 SERIES SHEETS). CONTRACTOR TO SUBMIT RFI (REQUEST FOR INFORMATION) FOR ANY ROUGH OPENING DIMENSIONS NOT GIVEN IN DETAILS FOR CLARIFICATION REQUIRED.

K. THE CONSTRUCTION DOCUMENTS ARE STRICTLY A GRAPHIC REPRESENTATION AND ARE NOT TO BE SCALED. WRITTEN DIMENSIONS SHALL ALWAYS GOVERN, AND SCALE DETAILS SHALL GOVERN OVER SMALL SCALE PLANS. IF A DISCREPANCY IS FOUND TO EXIST BETWEEN SCALED AND WRITTEN DIMENSIONS OR BETWEEN LARGE SCALE DETAILS AND SMALL SCALE PLANS, THE CONTRACTOR SHALL NOTIFY THE ARCHITECT IMMEDIATELY.

L. ALL WORK SHALL BE IN COMPLIANCE WITH ALL LOCAL BUILDING CODES AND ORDINANCES, AND THE REGULATIONS OF ALL FEDERAL, STATE, AND MUNICIPAL AUTHORITIES HAVING JURISDICTION. THE CONTRACTOR SHALL BE RESPONSIBLE FOR OBTAINING ALL NECESSARY PERMITS, INSPECTIONS AND APPROVALS.

M. THE CONTRACTOR SHALL VISIT THE SITE, BECOME FAMILIAR WITH LOCAL CONDITIONS UNDER WHICH THE WORK IS TO BE PERFORMED, AND CORRELATE PERSONAL OBSERVATIONS WITH THE REQUIREMENTS OF THE CONSTRUCTION DOCUMENTS. THE CONTRACTOR IS RESPONSIBLE FOR VERIFYING THE LOCATIONS OF ALL EXISTING CONDITIONS INCLUDING UTILITIES, SANITARY, AND SEWER. THE ARCHITECT SHALL BE NOTIFIED OF ANY DISCREPANCY BETWEEN FIELD CONDITIONS AND DRAWING INDICATIONS. ALL DIMENSIONS TO EXISTING SITE ELEMENTS ARE TO BE FIELD VERIFIED. THE ARCHITECT SHALL BE NOTIFIED OF ANY DISCREPANCY BETWEEN FIELD DIMENSIONS AND DRAWING DIMENSIONS.

KEY NOTES

SYMBOL	DESCRIPTION
1	LINE OF ROOF ABOVE
2	LINE OF FLOOR ABOVE
3	CANOPY
4	MECHANICAL UNIT, RE: MECHANICAL FOR ADDITIONAL INFORMATION
5	FLOOR GRATE, RE: MECHANICAL FOR ADDITIONAL INFORMATION
6	42" TALL PAINTED STEEL GUARDRAIL
7	24" X 14" FLOOR PENETRATION FOR HVAC DUCTWORK, RE: MECHANICAL FOR ADDITIONAL INFORMATION

FLOOR PLAN LEGEND

SYMBOL	DESCRIPTION
A1 X	PARTITION TAG REFER TO PARTITION SCHEDULE
1 / A-301	BUILDING SECTION TAG WALL SECTION TAG
1 / A-201	EXTERIOR ELEVATION TAG
1 / A-211	INTERIOR ELEVATION TAG
1 / A-431	PLAN REFERENCE TAG
ROOM NAME 101	ROOM NAME ROOM NUMBER
NEW DOOR WITH DOOR TAG REF DOOR SCHED	NEW WINDOW WITH WINDOW MARK REF GLAZING ELEVATIONS; COLUMN GRID DESIGNATIONS (A)

PLAN NORTH TRUE NORTH

VCS architects
19251 Purus Dr.
Porter, TX 77365

CONSULTANTS

BATES ALLEN PARK
BLACK COWBOY MUSEUM
630 CHARLIE ROBERTS LANE
KENDLETON TX.77451

REGISTERED ARCHITECT ROSINA MARK STATE OF TEXAS
9/20/24

Drawing Date: 06/03/2024
Drawn By: SMA
Checked By: DDV
Scale: AS NOTED

Revisions:

DESCRIPTION	
ISSUE FOR BID & CONSTRUCTION	09/23/2024

Drawing Name

OVERALL FIRST AND SECOND FLOOR PLANS

A-101

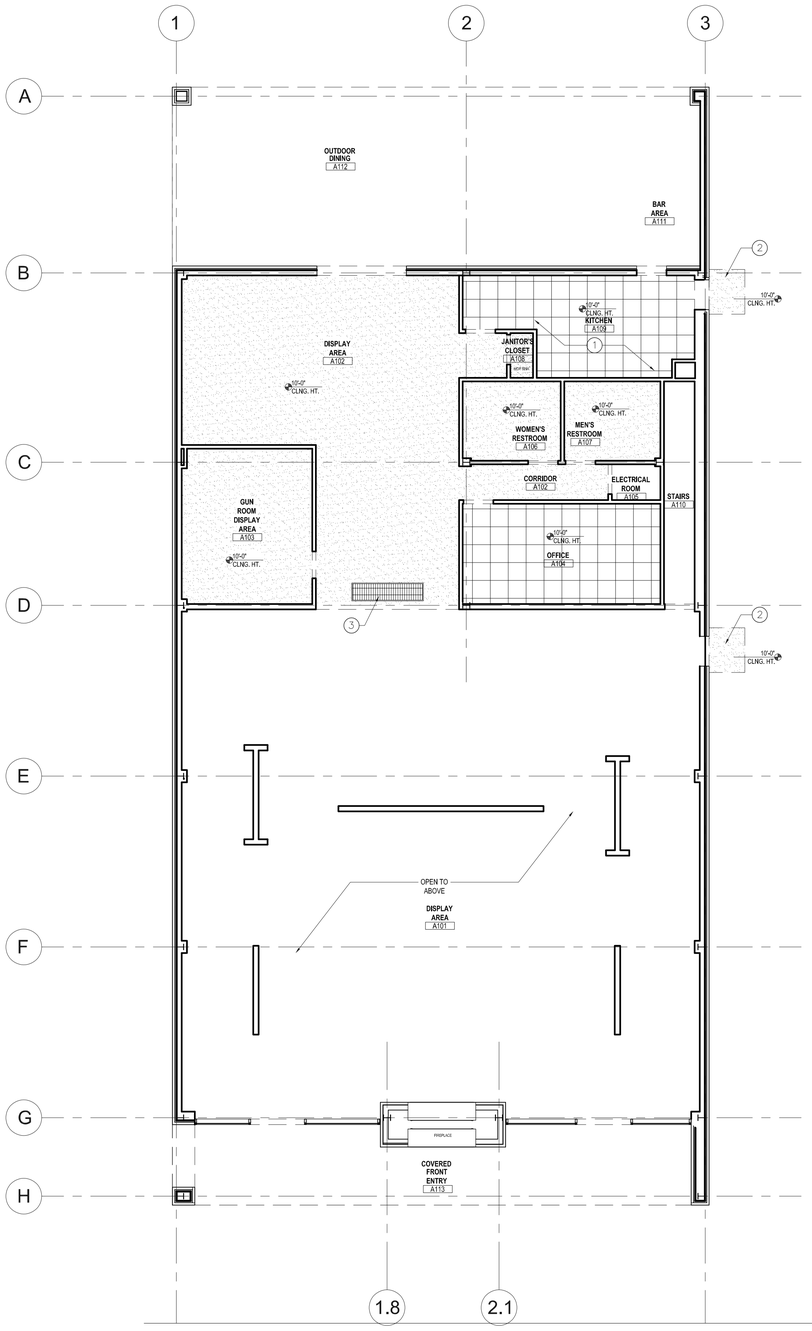

OVERALL FIRST FLOOR RCP SCALE: 1/8"=1'-0"

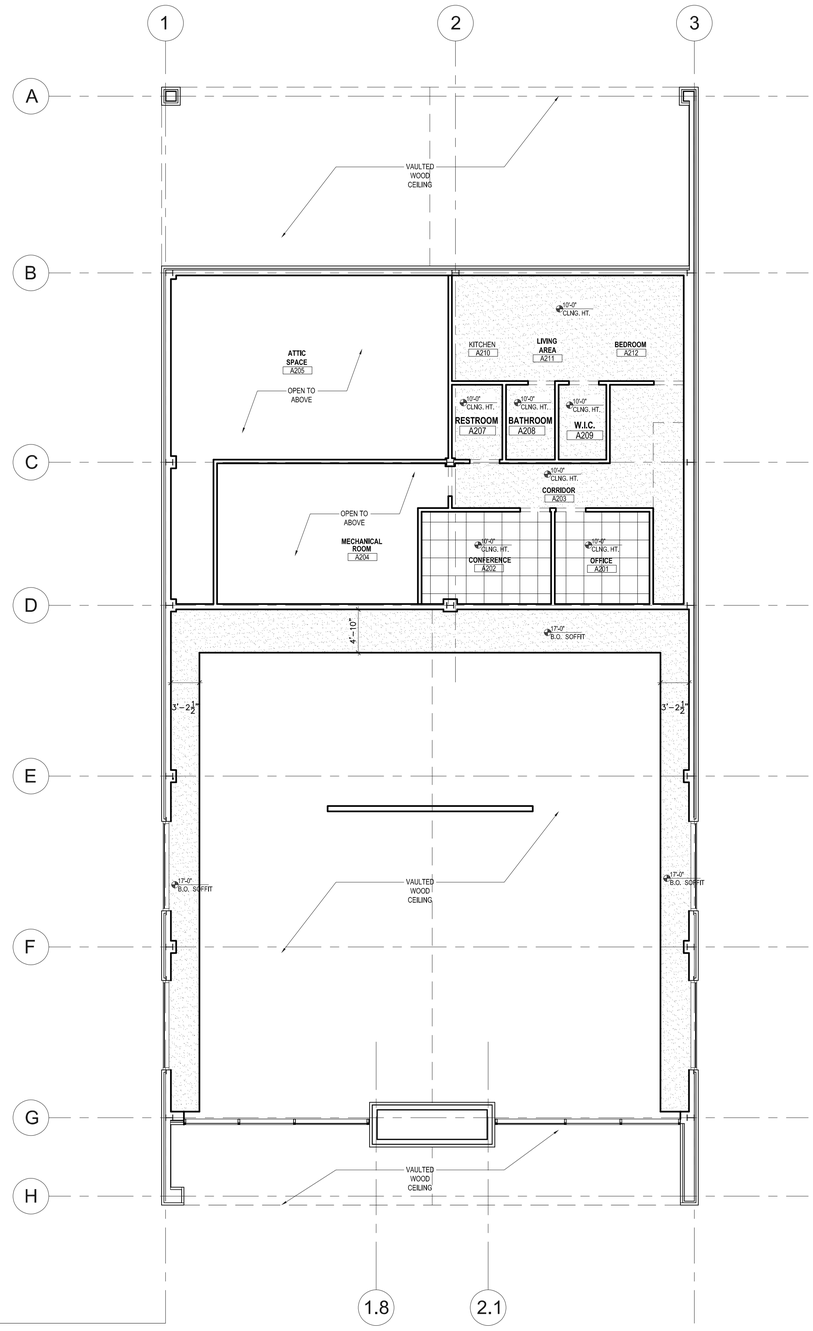

OVERALL SECOND FLOOR RCP SCALE: 1/8"=1'-0"

RCP GENERAL NOTES

A. SEE REFLECTED CEILING PLANS FOR CEILING HEIGHT AND TYPE.

B. SEE FLOOR PLANS FOR PARTITION TYPES AND PARTITION SCHEDULE FOR PARTITION CONSTRUCTION.

C. SEE SPECIFICATIONS FOR METAL STUD AND GYP. BD. MATERIALS.

D. ALL GYP BOARD EXPOSED CORNERS SHALL RECEIVE CORNER BEADS.

LEGEND

2 X 2 LAY-IN CEILING. CEILING HEIGHT AS INDICATED ON PLANS.

SUSPENDED 5/8" GYP. BOARD CEILING ON 3-5/8" METAL STUDS. CEILING HEIGHT AS INDICATED ON PLANS.

KEY NOTES

SYMBOL	DESCRIPTION
1	WASHABLE CEILING TILE IN KITCHEN AREA.
2	PLASTER SOFFIT.
3	96" X 24" RETURN GRATE, RE: MECHANICAL FOR ADDITIONAL INFORMATION

FLOOR PLAN LEGEND

SYMBOL	DESCRIPTION
A1 X	PARTITION TAG REFER TO PARTITION SCHEDULE
1 / A-301	BUILDING SECTION TAG WALL SECTION TAG
1 / A-201	EXTERIOR ELEVATION TAG
1 A-211	INTERIOR ELEVATION TAG
1 / A-431	PLAN REFERENCE TAG
ROOM NAME 101	ROOM NAME ROOM NUMBER
NEW DOOR WITH DOOR TAG REF DOOR SCHED	NEW WINDOW WITH WINDOW MARK REF GLAZING ELEVATIONS
A	COLUMN GRID DESIGNATIONS

PLAN NORTH

TRUE NORTH

architects

19251 Purus Dr.
Porter, TX 77365

CONSULTANTS

BATES ALLEN PARK
BLACK COWBOY MUSEUM
630 CHARLIE ROBERTS LANE
KENDLETON TX. 77451

REGISTERED ARCHITECT ROSINA MARK STATE OF TEXAS
9/20/24

Drawing Date: 06/03/2024
Drawn By: SMA
Checked By: DDV
Scale: AS NOTED

Revisions:

DESCRIPTION	
ISSUE FOR BID & CONSTRUCTION	09/23/2024

Drawing Name

OVERALL FIRST AND SECOND FLOOR RCP'S

A-102

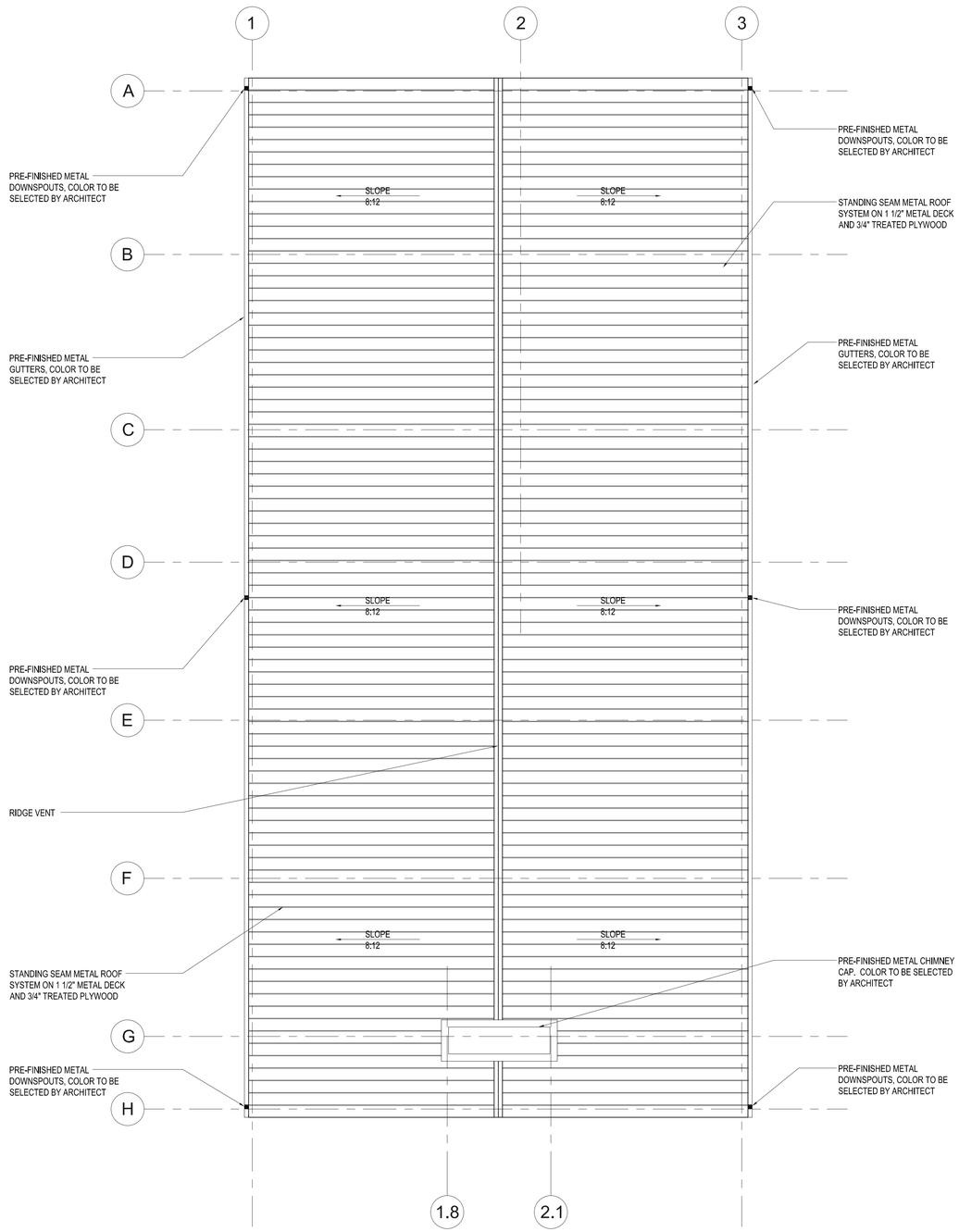

ROOF PLAN GENERAL NOTES

A. REFER TO SECTION 07540 OF THE PROJECT MANUAL FOR ROOF SYSTEM REQUIREMENTS.

B. INSTALL ROOF SYSTEM COMPONENTS IN STRICT ACCORDANCE MANUFACTURER'S REQUIREMENTS.

C. ALL COMPONENTS INTENDED FOR USE IN THE ROOF SYSTEM SHALL BE APPROVED BY MEMBRANE MANUFACTURER.

D. CRICKETS & SADDLES – WHERE INDICATED PROVIDE TAPERED, FACTORY–CUT, PRE PACKAGED ASSEMBLIES OF SAME MATERIAL AS UNDERLYING INSULATION. PROVIDE SLOPES REQUIRED LIMITING PONDING OF WATER TO NO MORE THAN 24 HOURS.

E. BITUMEN/ADHESIVE ENVELOPES AND/OR METAL STOPS ARE REQUIRED AT ALL PERIMETERS AND ROOF PENETRATIONS.

F. DO NOT ALLOW ROOFING WORK TO STAIN ROOF TOP PIPE, CONDUIT, BUILDING STRUCTURE, AND/OR BUILDING ENVELOPE.

G. DO NOT ALLOW ROOFING DEBRIS TO ENTER DRAIN SYSTEM. INSPECT ROOF AND VERIFY UNRESTRICTED DRAINAGE EACH DAY AND END OF WORK.

H. VERIFY ALL EXISTING CONDITIONS AND DIMENSIONS OF ROOF AREAS, LOCATIONS OF ROOFTOP EQUIPMENT, AND INCIDENTAL ITEMS OF WORK. THE DRAWINGS ARE DIAGRAMMATIC AND INDICTED DESIGN INTENT AND NOT EXACT QUANTITIES.

I. THE ABSENCE OF INCREMENTAL ITEMS OF WORK ON THE CONTRACT DOCUMENTS DOES NOT ALLEVIATE THE CONTRACTOR OF RESPONSIBILITY OF PROVIDING ALL WORK REQUIRED TO PROPERLY ROOF, FLASH, AND MAKE WATERPROOF ALL ITEMS THAT CAN BE REASONABLY INFERRED AS BEING PART OF THE WORK.

J. REFER TO MANUFACTURER'S RECOMMENDED DETAILS OR NRCA STANDARD DETAILS, WHICH EVER IS MOST STRINGENT, FOR CONDITIONS NOT DETAILED.

K. ROOFING MATERIAL S BOTH STORED AND IN PLACE SHALL BE PROTECTION FROM WEATHER INCLUDING WIND AND MOISTURE. PROVIDE CUT OFFS ETC AT THE END OF EACH DAYS WORK. WET OR OTHERWISE COMPROMISED ROOF MATERIALS SHALL BE REMOVED FROM THE SITE AND REPLACED AT CONTRACTORS EXPENSE.

L. ROOF SLOPES SHOWN ON THE CONTRACT DOCUMENTS INDICATED DESIGN INTENT. PROVIDE ROOF SLOPES REQUIRED LIMITING PONDING OF WATER TO NO MORE THAN 24 HOURS.

M. METAL FLASHINGS – PROVIDE CONCEALED (INTERNAL) SPLICE PLATES TYPICAL AT ALL METAL FLASHINGS AND COPINGS EXPOSED TO PUBLIC VIEW.

N. AT PERIMETER OF ALL ROOF PROVIDE FACTORY FABRICATED, CONTINUOUS 24" WIDE TAPERED PERLITE EDGE STRIP BETWEEN THERMAL INSULATION AND RETRO BOARD. PROVIDE MIN. ½"/FOOT SLOPE.

O. AT ALL ROOF TOP EQUIPMENT PROVIDE FACTORY PAINTED FINISH AT EXPOSED SURFACES. WHERE FACTORY FINISH IS NOT AVAILABLE FIELD PAINT IN COLOR AS SELECTED BY ARCHITECT.

KEY NOTES

SYMBOL	DESCRIPTION
1	
2	
3	
4	
5	
6	
7	
8	
9	

FLOOR PLAN LEGEND

SYMBOL	DESCRIPTION
A1 X	PARTITION TAG REFER TO PARTITION SCHEDULE
1 / A-307	BUILDING SECTION TAG WALL SECTION TAG
1 / A-207	EXTERIOR ELEVATION TAG
1 A-217	INTERIOR ELEVATION TAG
1 / A-431	PLAN REFERENCE TAG
ROOM NAME 101	ROOM NAME ROOM NUMBER
X	NEW DOOR WITH DOOR TAG REF DOOR SCHED
X	NEW WINDOW WITH WINDOW MARK REF GLAZING ELEVATIONS
A	COLUMN GRID DESIGNATIONS

PLAN NORTH

TRUE NORTH

VCS architects

19251 Purus Dr.
Porter, TX 77365

CONSULTANTS

BATES ALLEN PARK
BLACK COWBOY MUSEUM
630 CHARLIE ROBERTS LANE
KENDLETON TX. 77451

REGISTERED ARCHITECT — ROSINA MARK — STATE OF TEXAS — 9/20/24

Drawing Date: 06/03/2024
Drawn By: SMA
Checked By: DDV
Scale: AS NOTED

Revisions:

DESCRIPTION	
ISSUE FOR BID & CONSTRUCTION	09/23/2024

Drawing Name

OVERALL ROOF PLAN

A-103

OVERALL FIRST FLOOR PLAN

SCALE: 1/8"=1'-0"

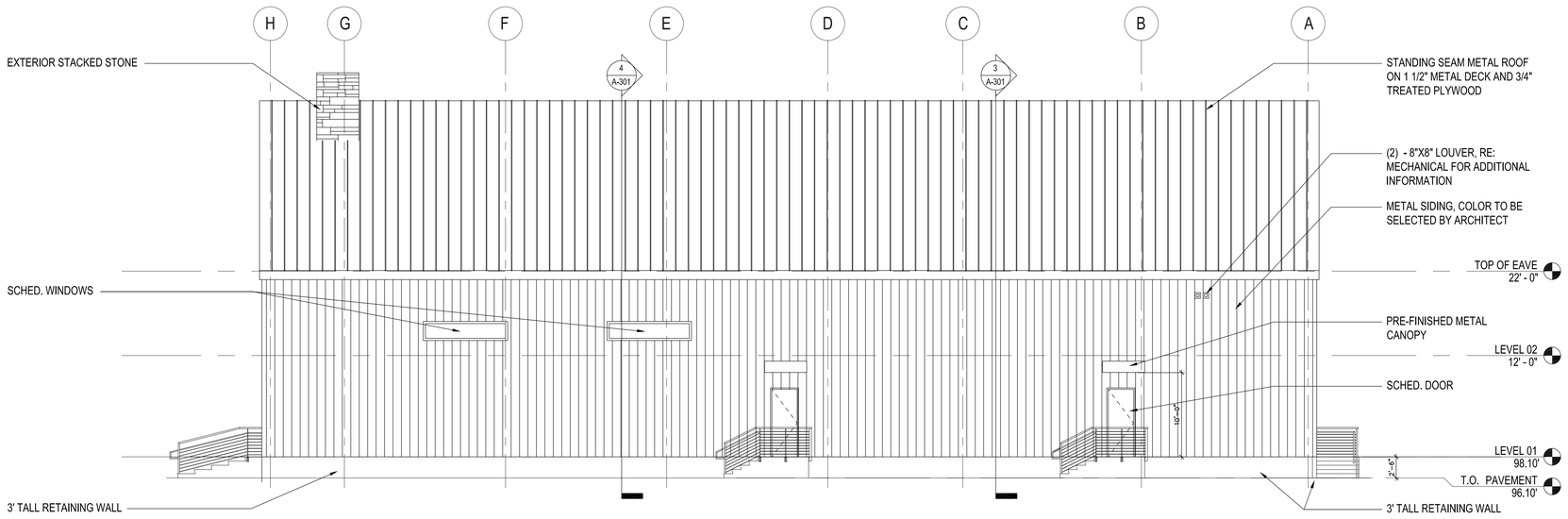

EXTERIOR ELEVATION

SCALE: 1/8"=1'-0"

2

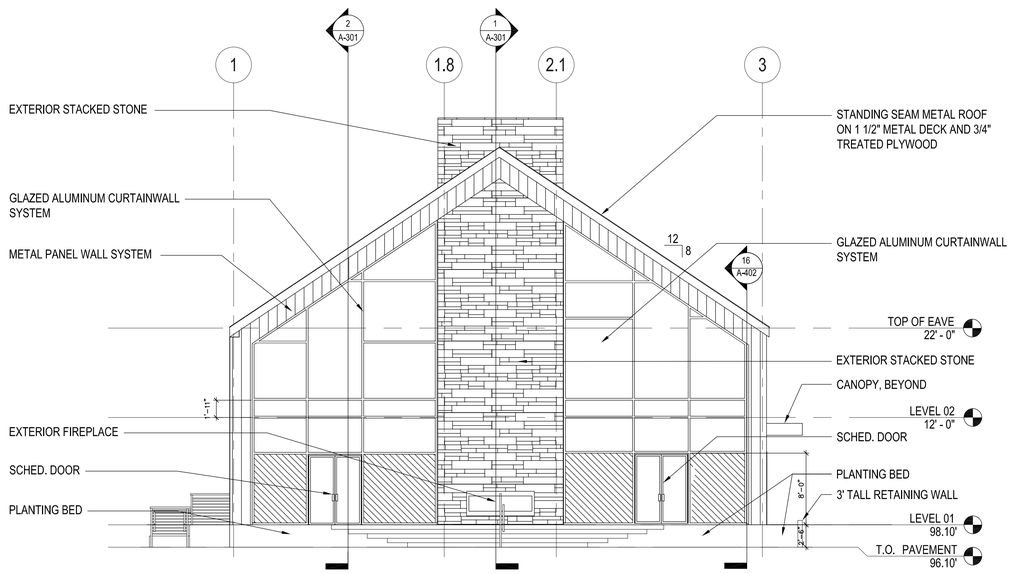

EXTERIOR ELEVATION

SCALE: 1/8"=1'-0"

4

EXTERIOR GENERAL NOTES

1. METAL PANEL TYPE A:
   PAC-CLAD; HIGHLINE B1 PERCISION SERIES WALL PANELS
   VERTICAL APPLICATION
   PANEL MODULES TO BE 11" O.C.
   LENGTH = 30'-0" MAXIMUM FOR STEEL; 22' MAXIMUM FOR ALUMINUM
   COLOR SERIES "CENTRIA SUNDANCE AM ALUMINUM METALLIC 3-COAT",
   SPECIFIC COLOR TO BE DETERMINED
   EXTERIOR SURFACE FINISH TO BE EMBOSSED

2. METAL ROOF PANEL TYPE B:
   PAC-CLAD; SNAP CLAD PANEL
   VERTICAL APPLICATION
   PANEL MODULES ARE 16" O.C.
   COLOR SERIES "CENTRIA SUNDANCE AM ALUMINUM METALLIC 3-COAT"
   COLOR TO BE DETERMINED
   EXTERIOR SURFACE FINISH TO BE EMBOSSED

3. PHENOLIC WALL PANEL TYPE C:
   TRESPA METEON WOOD DECORS OR PARKLEX FACADE SERIES, COLOR TO BE
   DETERMINED
   CONCEALED FASTENERS

KEY NOTES

SYMBOL	DESCRIPTION
1	
2	
3	
4	
5	
6	
7	
8	
9	

EXTERIOR ELEVATION LEGEND

SYMBOL	DESCRIPTION
	VISION GLASS
	TRANSLUCENT GLASS
	SPANDREL GLASS

VCS architects

19251 Purus Dr.
Porter, TX 77365

CONSULTANTS

BATES ALLEN PARK
BLACK COWBOY MUSEUM
630 CHARLIE ROBERTS LANE
KENDLETON TX. 77451

REGISTERED ARCHITECT
ROSEMARY MARK
STATE OF TEXAS
9/20/24

Drawing Date: 06/03/2024
Drawn By: SMA
Checked By: DDV
Scale: AS NOTED

Revisions:

DESCRIPTION	
ISSUE FOR BID & CONSTRUCTION	09/23/2024

Drawing Name

EXTERIOR ELEVATIONS

A-201

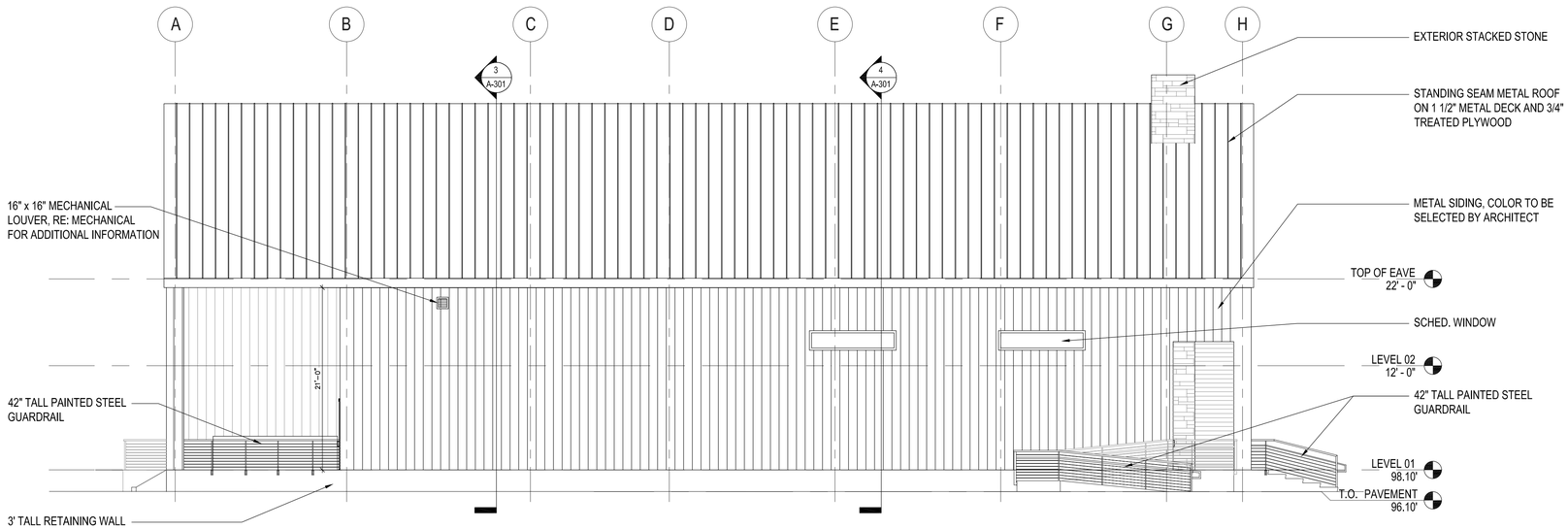

EXTERIOR ELEVATION SCALE: 1/8"=1'-0" 2

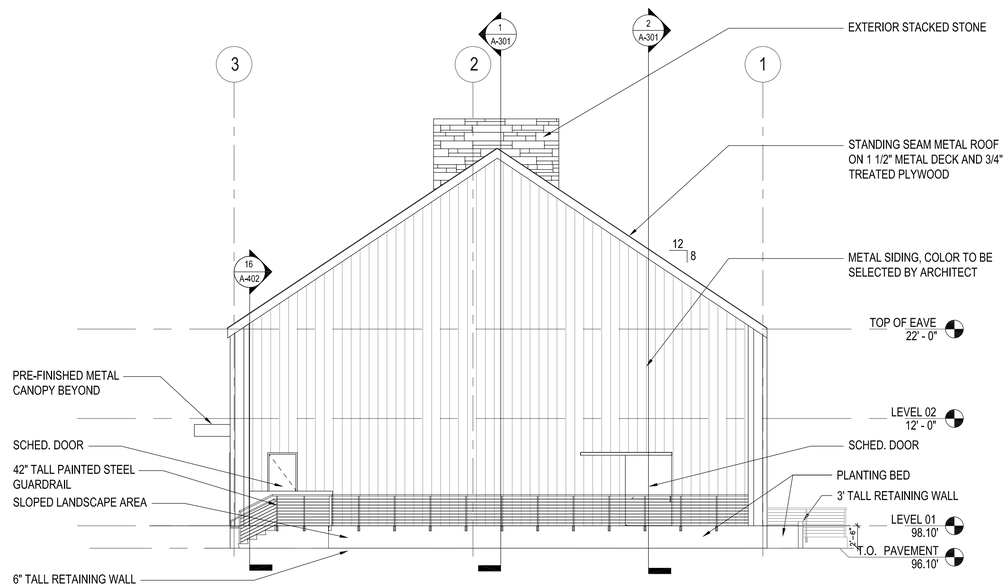

EXTERIOR ELEVATION SCALE: 1/8"=1'-0" 4

EXTERIOR GENERAL NOTES

1. METAL PANEL TYPE A:
   PAC-CLAD; HIGHLINE B1 PERCISION SERIES WALL PANELS
   VERTICAL APPLICATION
   PANEL MODULES TO BE 11" O.C.
   LENGTH = 30'-0" MAXIMUM FOR STEEL; 22' MAXIMUM FOR ALUMINUM
   COLOR SERIES "CENTRIA SUNDANCE AM ALUMINUM METALLIC 3-COAT",
   SPECIFIC COLOR TO BE DETERMINED
   EXTERIOR SURFACE FINISH TO BE EMBOSSED

2. METAL ROOF PANEL TYPE B:
   PAC-CLAD; SNAP CLAD PANEL
   VERTICAL APPLICATION
   PANEL MODULES ARE 16" O.C.
   COLOR SERIES "CENTRIA SUNDANCE AM ALUMINUM METALLIC 3-COAT"
   COLOR TO BE DETERMINED
   EXTERIOR SURFACE FINISH TO BE EMBOSSED

3. PHENOLIC WALL PANEL TYPE C:
   TRESPA METEON WOOD DECORS OR PARKLEX FACADE SERIES, COLOR TO BE DETERMINED
   CONGEALED FASTENERS

KEY NOTES

SYMBOL	DESCRIPTION
1	
2	
3	
4	
5	
6	
7	
8	
9	

EXTERIOR ELEVATION LEGEND

SYMBOL	DESCRIPTION
	VISION GLASS
	TRANSLUCENT GLASS
	SPANDREL GLASS

VCS architects

19251 Purus Dr.
Porter, TX 77365

CONSULTANTS

BATES ALLEN PARK
BLACK COWBOY MUSEUM
630 CHARLIE ROBERTS LANE
KENDLETON TX. 77451

REGISTERED ARCHITECT
STATE OF TEXAS
9/20/24

Drawing Date: 06/03/2024
Drawn By: SMA
Checked By: DDV
Scale: AS NOTED

Revisions:

DESCRIPTION	
ISSUE FOR BID & CONSTRUCTION	09/23/2024

Drawing Name

EXTERIOR ELEVATIONS

A-202

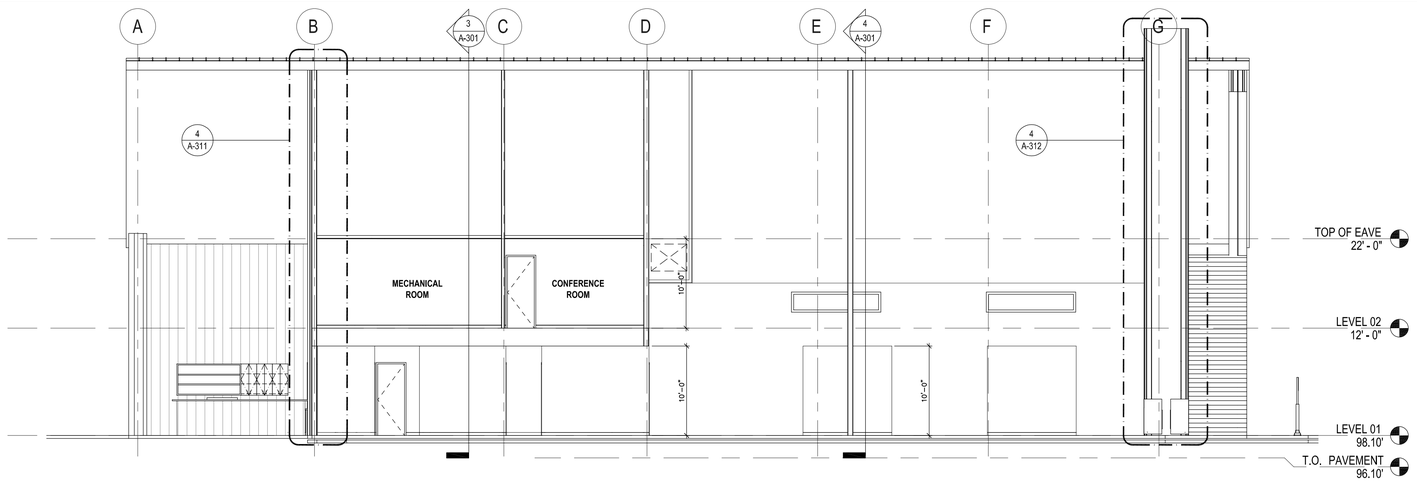

BUILDING SECTION

1

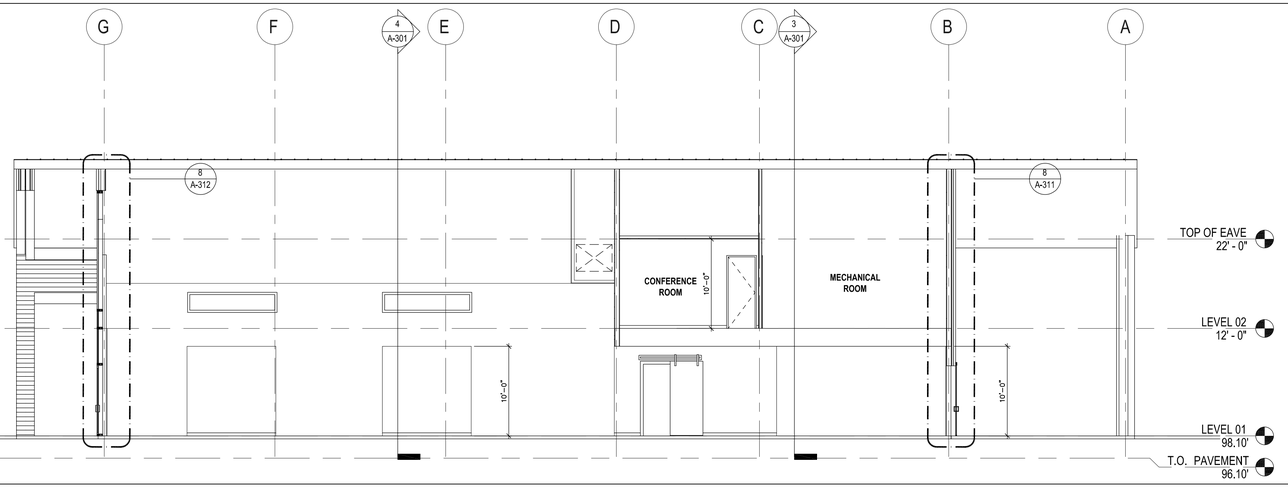

BUILDING SECTION

SCALE: 1/8"=1'-0"

3

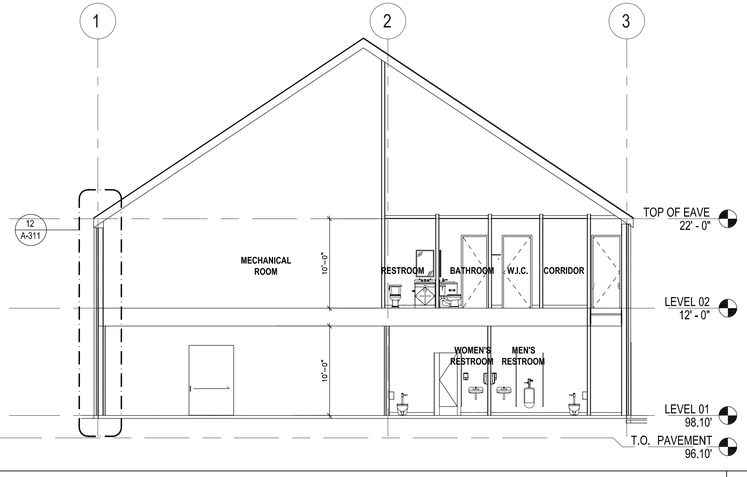

BUILDING SECTION

SCALE: 1/8"=1'-0"

12

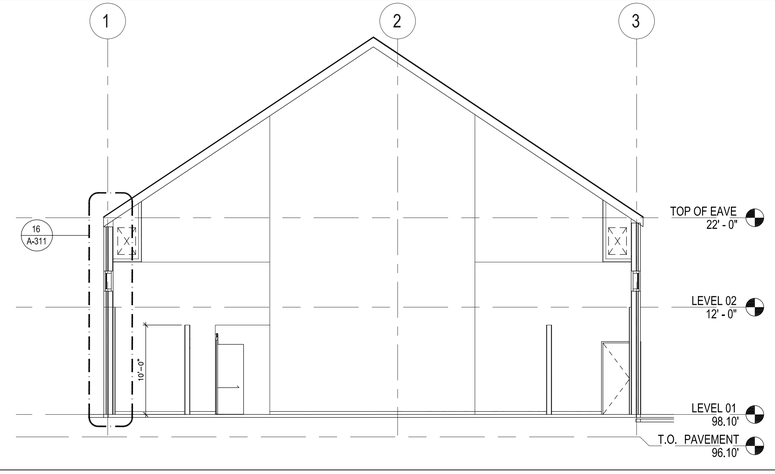

BUILDING SECTION

SCALE: 1/8"=1'-0"

4

EXTERIOR GENERAL NOTES

1. METAL PANEL TYPE A:
   PAC-CLAD; HIGHLINE B1 PERCISION SERIES WALL PANELS
   VERTICAL APPLICATION
   PANEL MODULES TO BE 11" O.C.
   LENGTH = 30'-0" MAXIMUM FOR STEEL; 22' MAXIMUM FOR ALUMINUM
   COLOR SERIES "CENTRIA SUNDANCE AM ALUMINUM METALLIC 3-COAT",
   SPECIFIC COLOR TO BE DETERMINED
   EXTERIOR SURFACE FINISH TO BE EMBOSSED

2. METAL ROOF PANEL TYPE B:
   PAC-CLAD; SNAP CLAD PANEL
   VERTICAL APPLICATION
   PANEL MODULES ARE 16" O.C.
   COLOR SERIES "CENTRIA SUNDANCE AM ALUMINUM METALLIC 3-COAT"
   COLOR TO BE DETERMINED
   EXTERIOR SURFACE FINISH TO BE EMBOSSED

3. PHENOLIC WALL PANEL TYPE C:
   TRESPA METEON WOOD DECORS OR PARKLEX FACADE SERIES, COLOR TO BE DETERMINED
   CONCEALED FASTENERS

KEY NOTES

SYMBOL	DESCRIPTION
1	
2	
3	
4	
5	
6	
7	
8	
9	

EXTERIOR ELEVATION LEGEND

SYMBOL	DESCRIPTION
	VISION GLASS
	TRANSLUCENT GLASS
	SPANDREL GLASS

VCS architects

19251 Purus Dr.
Porter, TX 77365

CONSULTANTS

BATES ALLEN PARK
BLACK COWBOY MUSEUM
630 CHARLIE ROBERTS LANE
KENDLETON TX. 77451

REGISTERED ARCHITECT
STATE OF TEXAS
9/20/24

Drawing Date: 06/03/2024
Drawn By: SMA
Checked By: DDV
Scale: AS NOTED

Revisions:

DESCRIPTION	
ISSUE FOR BID & CONSTRUCTION	09/23/2024

Drawing Name

BUILDING SECTIONS

A-301

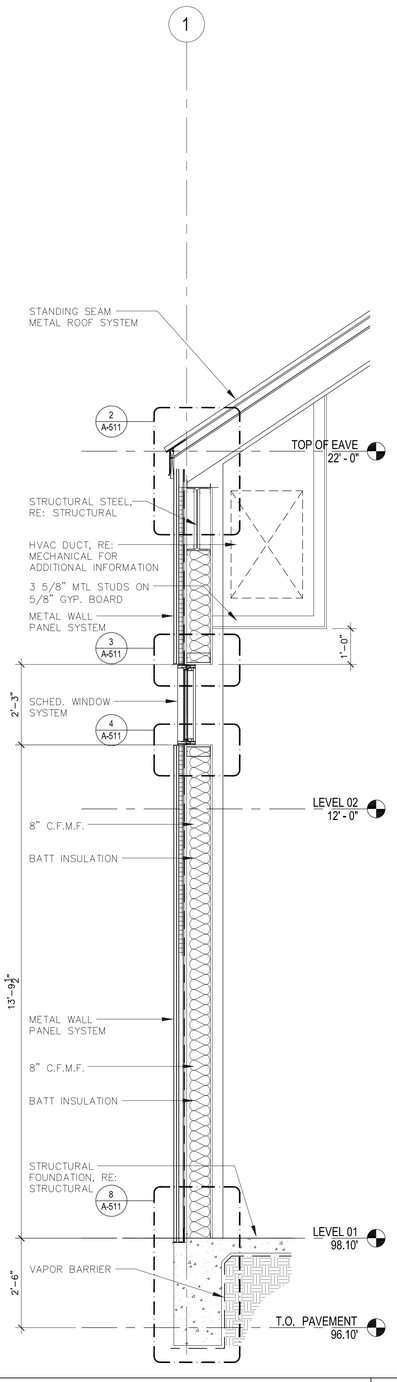

WALL SECTION SCALE: 1/2"=1'-0" 16

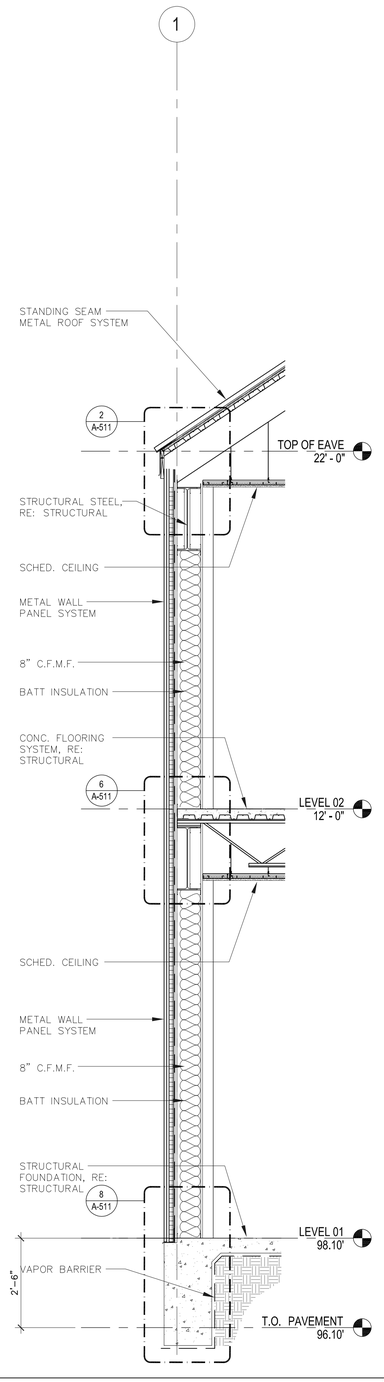

WALL SECTION SCALE: 1/2"=1'-0" 12

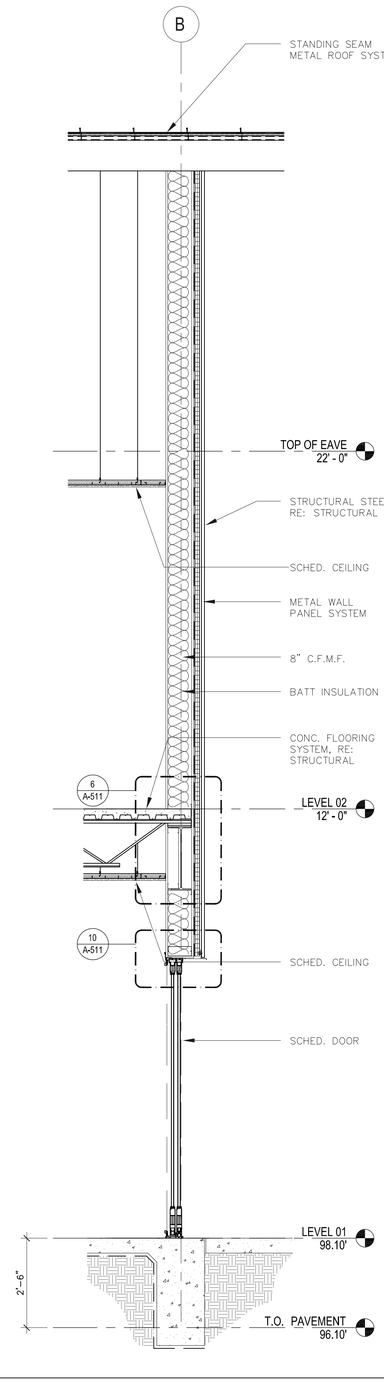

WALL SECTION SCALE: 1/2"=1'-0" 8

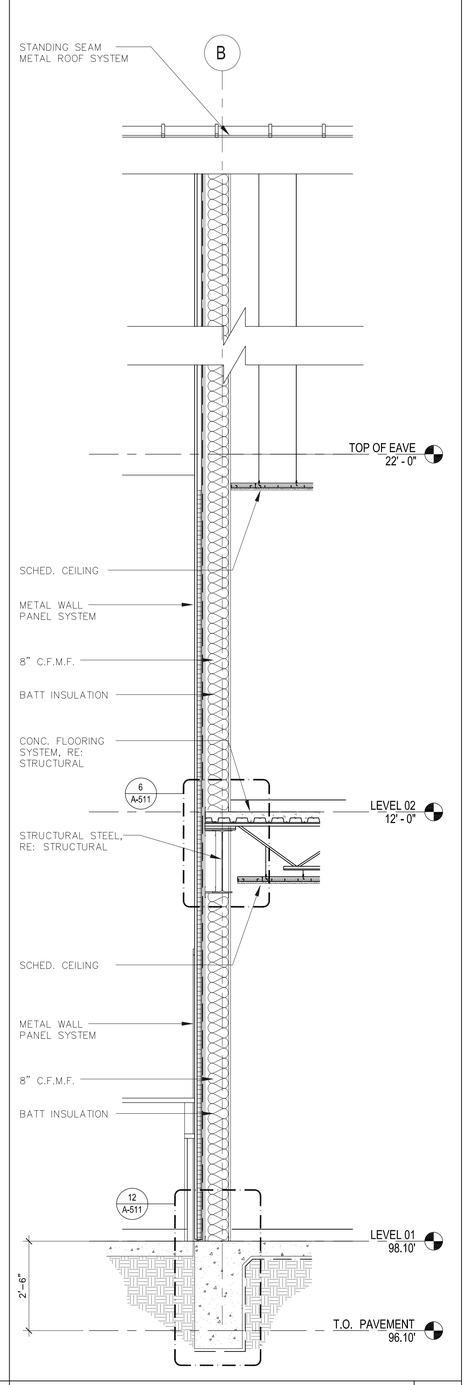

WALL SECTION SCALE: 1/2"=1'-0" 4

WALL SECTION NOTES

1. COLD FORMED METAL FRAMING AT EXTERIOR MAX. SPACING SHALL BE 16" O.C. MINIMUM STUD DEPTH SHALL BE 6" AND MINIMUM THICKNESS SHALL BE 0.0598". PROVIDE LATERAL BRACING @ MAX 4' O.C. REFER TO SECTION 05400 - COLD FORMED METAL FRAMING OF THE PROJECT MANUAL FOR DESIGN AND PERFORMANCE REQUIREMENTS.
2. GYPSUM BOARD ASSEMBLIES AT PERIMETER WALLS - PROVIDE 6" DEEP METAL STUDS AT MAX. 16" O.C. SPACING W/ CONTINUOUS WIRE MESH @ OUTSIDE FACE. PROVIDE GAGE AS REQUIRED BY DESIGN AND PERFORMANCE CRITERIA INDICATED. REFER TO SECTION 09260 - GYPSUM BOARD ASSEMBLIES OF THE PROJECT MANUAL.
3. APPLY WEATHER BARRIER @ CONCEALED EXTERIOR FACES OF ALL SHEATHING, STRUCTURAL CONCRETE, AND PRECAST CONCRETE SUBSTRATE BEHIND METAL WALL PANELS.
4. SHEATHING & CONCEALED PRECAST CONC - SEAL ALL JOINTS INCLUDING PANEL TO PANEL JOINTS, INSIDE AND OUTSIDE CORNERS, PERIMETERS, PENETRATIONS AND ABUTMENTS TO ADJACENT MATERIALS AIR AND WATER TIGHT WITH 1 PLY SELF ADHERING FLASHING OR OTHER APPROVED SYSTEM. IN ADDITION PROVIDE DOUBLE BEAD SILICON SEALANT AT CONCEALED PRECAST PANELS.
5. EXPOSED PRECAST PANELS - AT JOINTS PROVIDE DOUBLE BEAD OF DOW 790 OR EQUAL SILICON SEALANT AND BACKER RODS AS INDICATED. IN ADDITION, PROVIDE 1 PLY FLEXIBLE FLASHING OVER JOINT AT CONCEALED, INTERIOR FACE.
6. PROVIDE CONTINUOUS SILL PANS WITH FACTORY FABRICATED END DAMS AT SILLS OF ALL ALUMINUM GLAZING SYSTEMS.
7. PROVIDE UL LISTED FIRE & SMOKE CONTAINMENT SYSTEMS BETWEEN STRUCTURE AND CURTAINWALLS TYPICAL AT EACH FLOOR AND ROOF PERIMETER. FIRE STOP ALL PENETRATIONS.
8. INSTALL INSULATION AT PERIMETER WALLS SO THAT CONTACT TO INSIDE FACE OF PRECAST UNITS CAN NOT BE MADE.
9. PROVIDE CONTINUOUS SEALANT JOINTS AT BOTH EXTERIOR & INTERIOR FACES OF WINDOW AND DOOR OPENINGS. DOW 790 OR APPROVED EQUAL.
10. PROVIDE CONCEALED SPLICE PLATES TYPICAL @ ALL EXPOSED METAL FLASHINGS & COPINGS.
11. GRADE TO SLOPE AWAY FROM BUILDING, REFER CIVIL DWGS.
12. ALL FERROUS MTL @ BLDG. EXTERIOR TO BE GALV. (ASTM G90)

VCS architects
19251 Purus Dr.
Porter, TX 77365

CONSULTANTS

BATES ALLEN PARK
BLACK COWBOY MUSEUM
630 CHARLIE ROBERTS LANE
KENDLETON TX. 77451

REGISTERED ARCHITECT ROSINA MARK 20008 STATE OF TEXAS
9/20/24

Drawing Date: 06/03/2024
Drawn By: SMA
Checked By: DDV
Scale: AS NOTED

Revisions:

DESCRIPTION	
ISSUE FOR BID & CONSTRUCTION	09/23/2024

Drawing Name
ARCHITECTURAL WALL SECTIONS

A-311

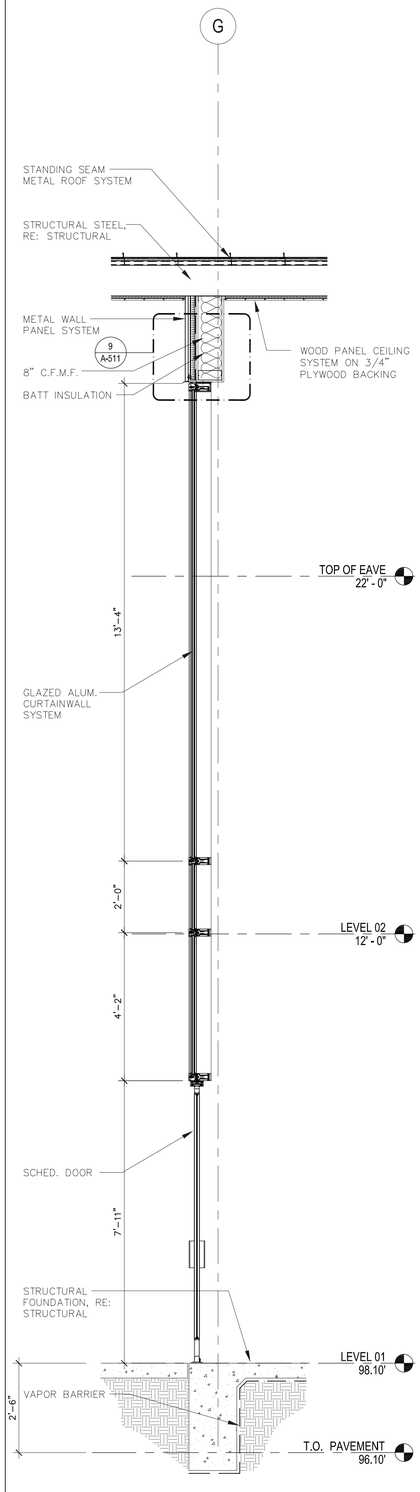

WALL SECTION SCALE: 1/2"=1'-0" 16

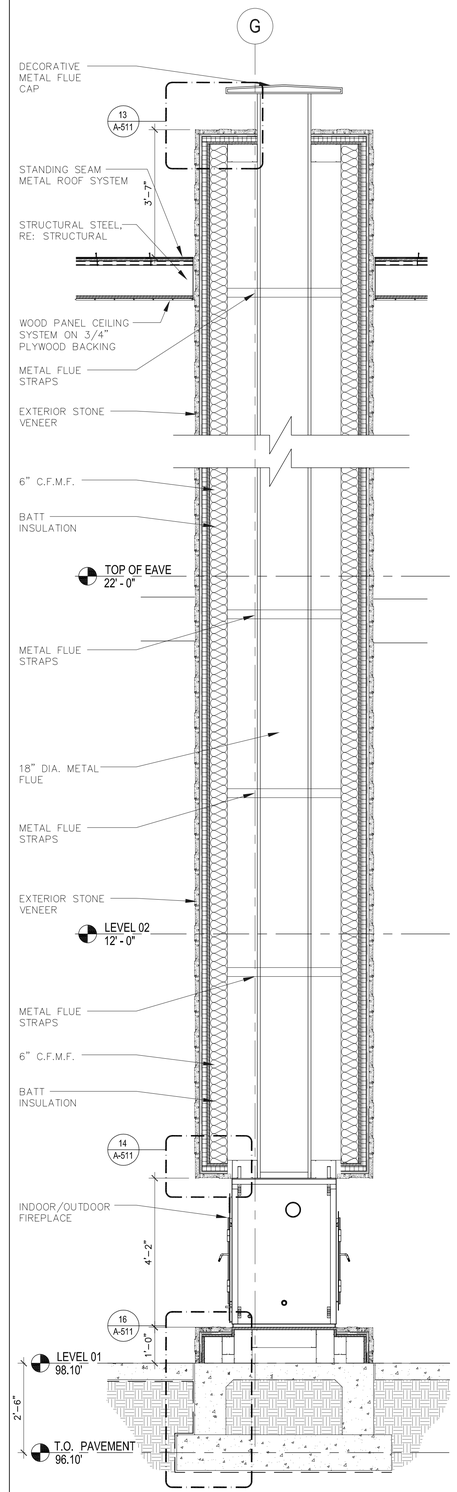

WALL SECTION SCALE: 1/2"=1'-0" 12

WALL SECTION SCALE: 1/2"=1'-0" 8

WALL SECTION SCALE: 1/2"=1'-0" 4

WALL SECTION NOTES

1. COLD FORMED METAL FRAMING AT EXTERIOR MAX. SPACING SHALL BE 16" O.C. MINIMUM STUD DEPTH SHALL BE 6" AND MINIMUM THICKNESS SHALL BE 0.0598". PROVIDE LATERAL BRACING @ MAX 4' O.C. REFER TO SECTION 05400 - COLD FORMED METAL FRAMING OF THE PROJECT MANUAL FOR DESIGN AND PERFORMANCE REQUIREMENTS.
2. GYPSUM BOARD ASSEMBLIES AT PERIMETER WALLS - PROVIDE 6" DEEP METAL STUDS AT MAX. 16" O.C. SPACING W/ CONTINUOUS WIRE MESH @ OUTSIDE FACE. PROVIDE GAGE AS REQUIRED BY DESIGN AND PERFORMANCE CRITERIA INDICATED. REFER TO SECTION 09260 - GYPSUM BOARD ASSEMBLIES OF THE PROJECT MANUAL.
3. APPLY WEATHER BARRIER @ CONCEALED EXTERIOR FACES OF ALL SHEATHING, STRUCTURAL CONCRETE, AND PRECAST CONCRETE SUBSTRATE BEHIND METAL WALL PANELS.
4. SHEATHING & CONCEALED PRECAST CONC - SEAL ALL JOINTS INCLUDING PANEL TO PANEL JOINTS, INSIDE AND OUTSIDE CORNERS, PERIMETERS, PENETRATIONS AND ABUTMENTS TO ADJACENT MATERIALS AIR AND WATER TIGHT WITH 1 PLY SELF ADHERING FLASHING OR OTHER APPROVED SYSTEM. IN ADDITION PROVIDE DOUBLE BEAD SILICON SEALANT AT CONCEALED PRECAST PANELS.
5. EXPOSED PRECAST PANELS - AT JOINTS PROVIDE DOUBLE BEAD OF DOW 790 OR EQUAL SILICON SEALANT AND BACKER RODS AS INDICATED. IN ADDITION, PROVIDE 1 PLY FLEXIBLE FLASHING OVER JOINT AT CONCEALED, INTERIOR FACE.
6. PROVIDE CONTINUOUS SILL PANS WITH FACTORY FABRICATED END DAMS AT SILLS OF ALL ALUMINUM GLAZING SYSTEMS.
7. PROVIDE UL LISTED FIRE & SMOKE CONTAINMENT SYSTEMS BETWEEN STRUCTURE AND CURTAINWALLS TYPICAL AT EACH FLOOR AND ROOF PERIMETER. FIRE STOP ALL PENETRATIONS.
8. INSTALL INSULATION AT PERIMETER WALLS SO THAT CONTACT TO INSIDE FACE OF PRECAST UNITS CAN NOT BE MADE.
9. PROVIDE CONTINUOUS SEALANT JOINTS AT BOTH EXTERIOR & INTERIOR FACES OF WINDOW AND DOOR OPENINGS. DOW 790 OR APPROVED EQUAL.
10. PROVIDE CONCEALED SPLICE PLATES TYPICAL @ ALL EXPOSED METAL FLASHINGS & COPINGS.
11. GRADE TO SLOPE AWAY FROM BUILDING, REFER CIVIL DWGS.
12. ALL FERROUS MTL @ BLDG. EXTERIOR TO BE GALV. (ASTM G90)

VCS architects
19251 Purus Dr.
Porter, TX 77365

CONSULTANTS

BATES ALLEN PARK
BLACK COWBOY MUSEUM
630 CHARLIE ROBERTS LANE
KENDLETON TX. 77451

REGISTERED ARCHITECT ROSINA MARK 10008 STATE OF TEXAS
9/20/24

Drawing Date: 06/03/2024
Drawn By: SMA
Checked By: DDV
Scale: AS NOTED

Revisions:

DESCRIPTION	
ISSUE FOR BID & CONSTRUCTION	09/23/2024

Drawing Name
ARCHITECTURAL WALL SECTIONS

A-312

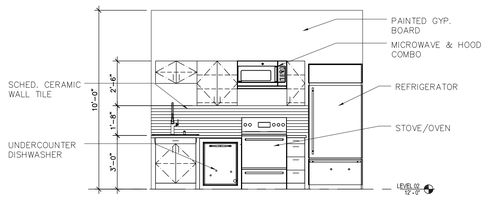

KITCHEN LEVEL 02 INTERIOR ELEVATION SCALE: 1/4"=1'-0" 13

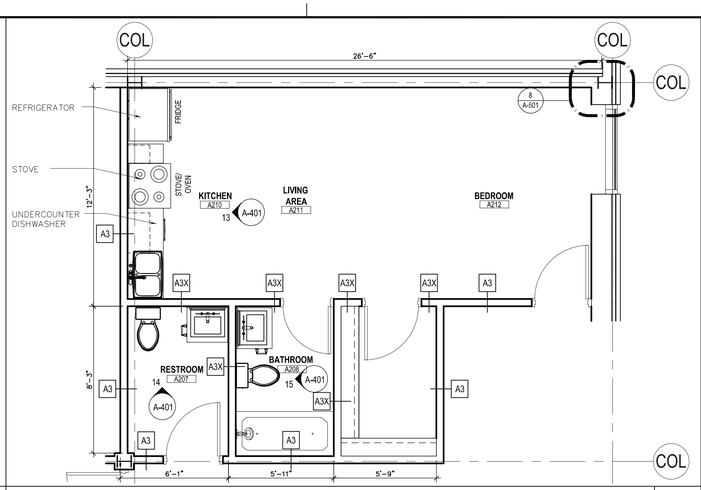

ENLARGED LEVEL 02 RESTROOM & KITCHEN FLOOR PLAN SCALE = 1/4" = 1'-0" 5

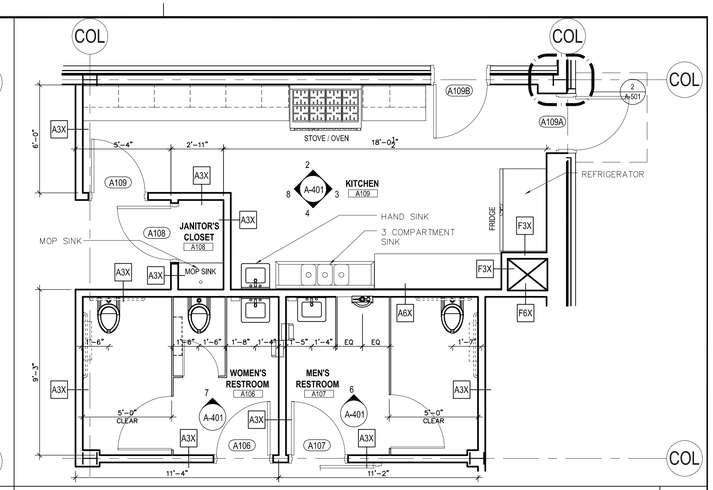

ENLARGED LEVEL 01 RESTROOM & KITCHEN FLOOR PLAN SCALE = 1/4" = 1'-0" 1

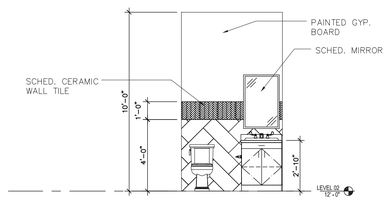

BATHROOM LEVEL 02 – INTERIOR ELEVATION SCALE: 1/4"=1'-0" 14

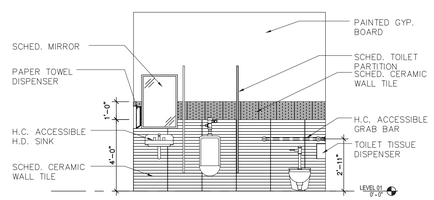

MEN'S RESTROOM INTERIOR ELEVATION SCALE: 1/8"=1'-0" 6

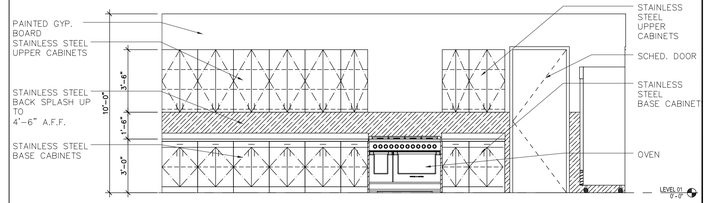

KITCHEN INTERIOR ELEVATION SCALE: 1/4"=1'-0" 2

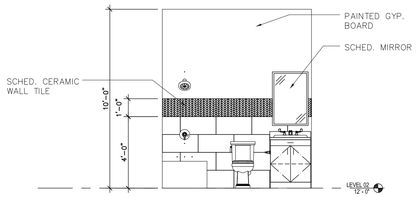

BATHROOM LEVEL 02 – INTERIOR ELEVATION SCALE: 1/4"=1'-0" 15

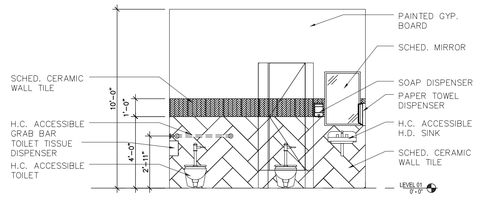

WOMEN'S RESTROOM INTERIOR ELEVATION SCALE: 1/8"=1'-0" 7

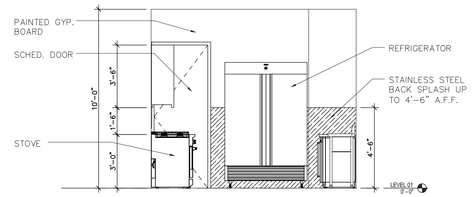

KITCHEN INTERIOR ELEVATION SCALE: 1/4"=1'-0" 3

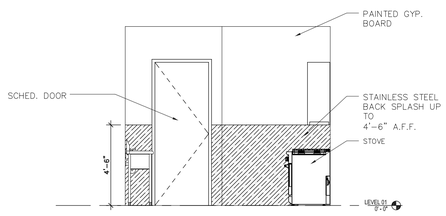

KITCHEN INTERIOR ELEVATION SCALE: 1/8"=1'-0" 8

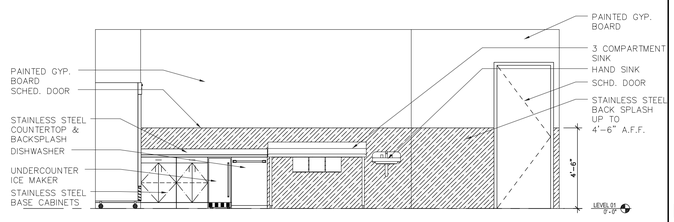

KITCHEN INTERIOR ELEVATION SCALE: 1/4"=1'-0" 4

VCS architects
19251 Purus Dr.
Porter, TX 77365

CONSULTANTS

BATES ALLEN PARK
BLACK COWBOY MUSEUM
630 CHARLIE ROBERTS LANE
KENDLETON TX. 77451

REGISTERED ARCHITECT STATE OF TEXAS
9/20/24

Drawing Date: 06/03/2024
Drawn By: SMA
Checked By: DDV
Scale: AS NOTED

Revisions:

DESCRIPTION	
ISSUE FOR BID & CONSTRUCTION	09/23/2024

Drawing Name

ARCHITECTURAL ENLARGED PLANS AND INTERIOR ELEVATIONS

A-401

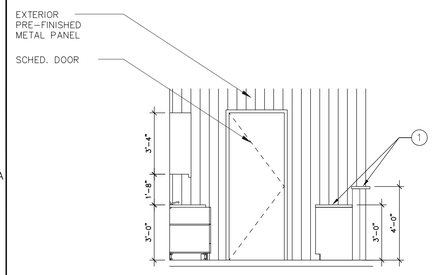

OUTDOOR BAR PLAN ELEVATION SCALE: 1/4" = 1'-0" | 13

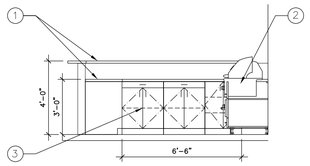

OUTDOOR BAR PLAN ELEVATION SCALE: 1/4" = 1'-0" | 9

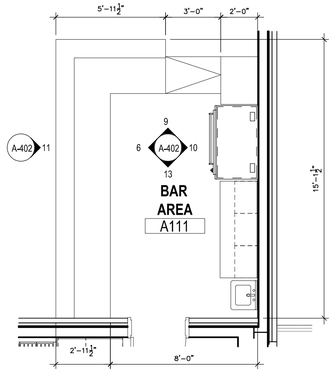

ENLARGED OUTDOOR BAR PLAN SCALE: 1/4" = 1'-0" | 5

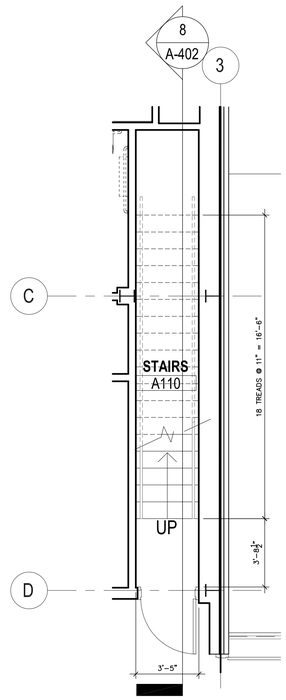

ENLARGED FIRST FLOOR STAIR PLAN SCALE: 1/4" = 1'-0" | 2

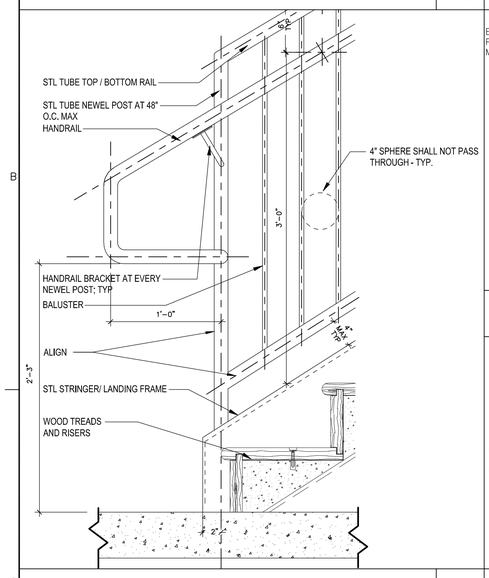

DETAIL AT STAIR LANDING SCALE: 1-1/2" = 1'-0" | 15

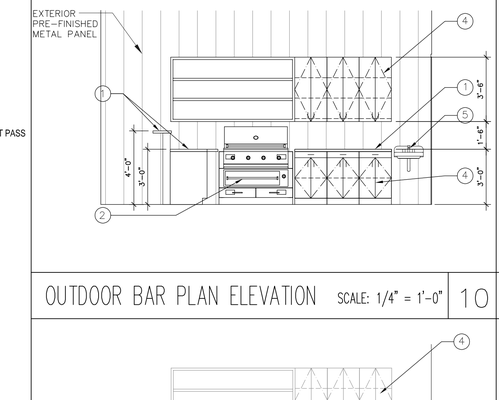

OUTDOOR BAR PLAN ELEVATION SCALE: 1/4" = 1'-0" | 10

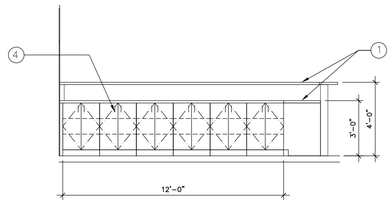

OUTDOOR BAR PLAN ELEVATION SCALE: 1/4" = 1'-0" | 6

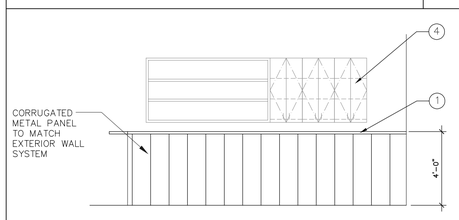

OUTDOOR BAR PLAN ELEVATION SCALE: 1/4" = 1'-0" | 11

SCALE: 1/4" = 1'-0" | 6

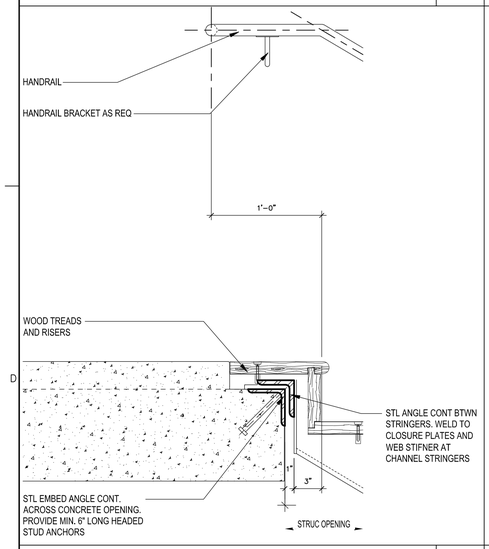

DETAIL AT STAIR LANDING SCALE: 1-1/2" = 1'-0" | 16

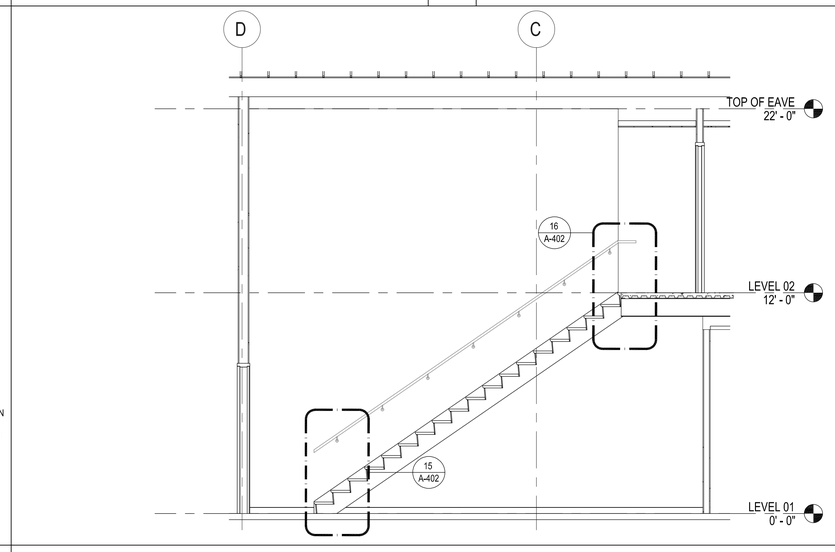

STAIR SECTION SCALE: 1/4" = 1'-0" | 8

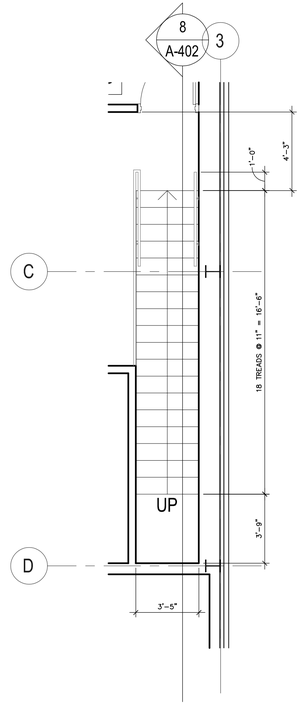

ENLARGED SECOND FLOOR STAIR PLAN SCALE: 1/4" = 1'-0" | 4

FLOOR PLAN GENERAL NOTES

A. ALL UNMARKED PARTITIONS ARE TYPE A6. ALL COLUMN FURRING TO BE PARTITION TYPE F3 UNLESS NOTED OTHERWISE.

B. ALL WINDOW AND DOOR PLAN OPENINGS ARE DIMENSIONED ON AREA PLANS.

C. FOR FIRE AND LIFE SAFETY PLANS, REFER TO A-001 DRAWING.

D. ROOF PLAN SHOWS FOR REFERENCE ONLY, REFER TO ROOF PLAN FOR NOTES AND DIMENSIONS.

E. REFER TO A-200 SERIES DRAWING FOR EXTERIOR ELEVATIONS, A-300 SERIES DRAWINGS FOR BUILDING SECTIONS AND WALL SECTIONS.

F. REFER TO A-600 SERIES FOR ALL PARTITIONS, DOORS, WINDOWS AND ACCESSORIES.

G. INSTALL APPROPRIATE MANUFACTURED EXPANSION JOINT COVERS AT ALL VISIBLE BUILDING EXPANSION JOINTS. TOP OF COVER OF FLOOR EXPANSION JOINT COVERS TO BE FLUSH WITH TOP OF FINISHED FLOOR.

H. ALL PARTITION DIMENSIONS ARE TAKEN FROM THE CENTERLINE OF COLUMNS AND TO THE DRYWALL FACE.

I. INSTALL BLOCKING AS REQUIRED TO SUPPORT WALL MOUNTED DEVICES.

J. AT ALL SPANDREL GLASS LOCATIONS, FACE OF INTERIOR WALL TO BE CONTINUOUS WITH ADJACENT WALL.

K. GENERAL DIMENSIONS PROVIDED ON FLOOR PLANS AND AREA PLANS DO NOT REFLECT THE ROUGH OPENING DIMENSIONS REQUIRED FOR COORDINATION WITH MASONRY JOINT COURSING. CONTRACTOR IS TO PROVIDE ROUGH OPENING FRAMING DIMENSIONS CONSISTENT WITH ENLARGED ARCHITECTURAL PLAN/SECTION DETAILS (A-500 SERIES SHEETS), AND WINDOW SCHEDULE/DETAILS (A-600 SERIES SHEETS). CONTRACTOR TO SUBMIT RFI (REQUEST FOR INFORMATION) FOR ANY ROUGH OPENING DIMENSIONS NOT GIVEN IN DETAILS FOR CLARIFICATION REQUIRED.

L. THE CONSTRUCTION DOCUMENTS ARE STRICTLY A GRAPHIC REPRESENTATION AND ARE NOT TO BE SCALED. WRITTEN DIMENSIONS SHALL ALWAYS GOVERN, AND SCALE DETAILS SHALL GOVERN OVER SMALL SCALE PLANS. IF A DISCREPANCY IS FOUND TO EXIST BETWEEN SCALED AND WRITTEN DIMENSIONS OR BETWEEN LARGE SCALE DETAILS AND SMALL SCALE PLANS, THE CONTRACTOR SHALL NOTIFY THE ARCHITECT IMMEDIATELY.

M. ALL WORK SHALL BE IN COMPLIANCE WITH ALL LOCAL BUILDING CODES AND ORDINANCES, AND THE REGULATIONS OF ALL FEDERAL, STATE, AND MUNICIPAL AUTHORITIES HAVING JURISDICTION. THE CONTRACTOR SHALL BE RESPONSIBLE FOR OBTAINING ALL NECESSARY PERMITS, INSPECTIONS AND APPROVALS.

N. THE CONTRACTOR SHALL VISIT THE SITE, BECOME FAMILIAR WITH LOCAL CONDITIONS UNDER WHICH THE WORK IS TO BE PERFORMED, AND CORRELATE PERSONAL OBSERVATIONS WITH THE REQUIREMENTS OF THE CONSTRUCTION DOCUMENTS. THE CONTRACTOR IS RESPONSIBLE FOR VERIFYING THE LOCATIONS OF ALL EXISTING CONDITIONS INCLUDING UTILITIES, SANITARY, AND SEWER. THE ARCHITECT SHALL BE NOTIFIED OF ANY DISCREPANCY BETWEEN FIELD CONDITIONS AND DRAWING INDICATIONS. ALL DIMENSIONS TO EXISTING SITE ELEMENTS ARE TO BE FILED VERIFIED. THE ARCHITECT SHALL BE NOTIFIED OF ANY DISCREPANCY BETWEEN FIELD DIMENSIONS AND DRAWING DIMENSIONS.

KEY NOTES

SYMBOL	DESCRIPTION
1	SOLID SURFACE COUNTERTOP
2	OUTDOOR GRILLE
3	PRE-FINISHED WOOD BASE CABINETS
4	PRE-FINISHED WOOD UPPER CABINETS
5	HAND SINK
6	
7	
8	
9	

FLOOR PLAN LEGEND

SYMBOL	DESCRIPTION
A1 X	PARTITION TAG REFER TO PARTITION SCHEDULE
1 / A-301	BUILDING SECTION TAG WALL SECTION TAG
1 / A-201	EXTERIOR ELEVATION TAG
1 A-211	INTERIOR ELEVATION TAG
1 / A-431	PLAN REFERENCE TAG
ROOM NAME 101	ROOM NAME ROOM NUMBER
NEW DOOR WITH DOOR TAG REF DOOR SCHED	EXISTING WALL TO REMAIN NEW WALL

VCS architects
19251 Purus Dr.
Porter, TX 77365

CONSULTANTS

BATES ALLEN PARK
BLACK COWBOY MUSEUM
630 CHARLIE ROBERTS LANE
KENDLETON TX. 77451

REGISTERED ARCHITECT ROGNAL MARK 19065 STATE OF TEXAS
9/20/24

Drawing Date: 06/03/2024
Drawn By: SMA
Checked By: DDV
Scale: AS NOTED

Revisions:

DESCRIPTION	
ISSUE FOR BID & CONSTRUCTION	09/23/2024

Drawing Name

ARCHITECTURAL ENLARGED STAIR PLANS AND SECTIONS

A-402

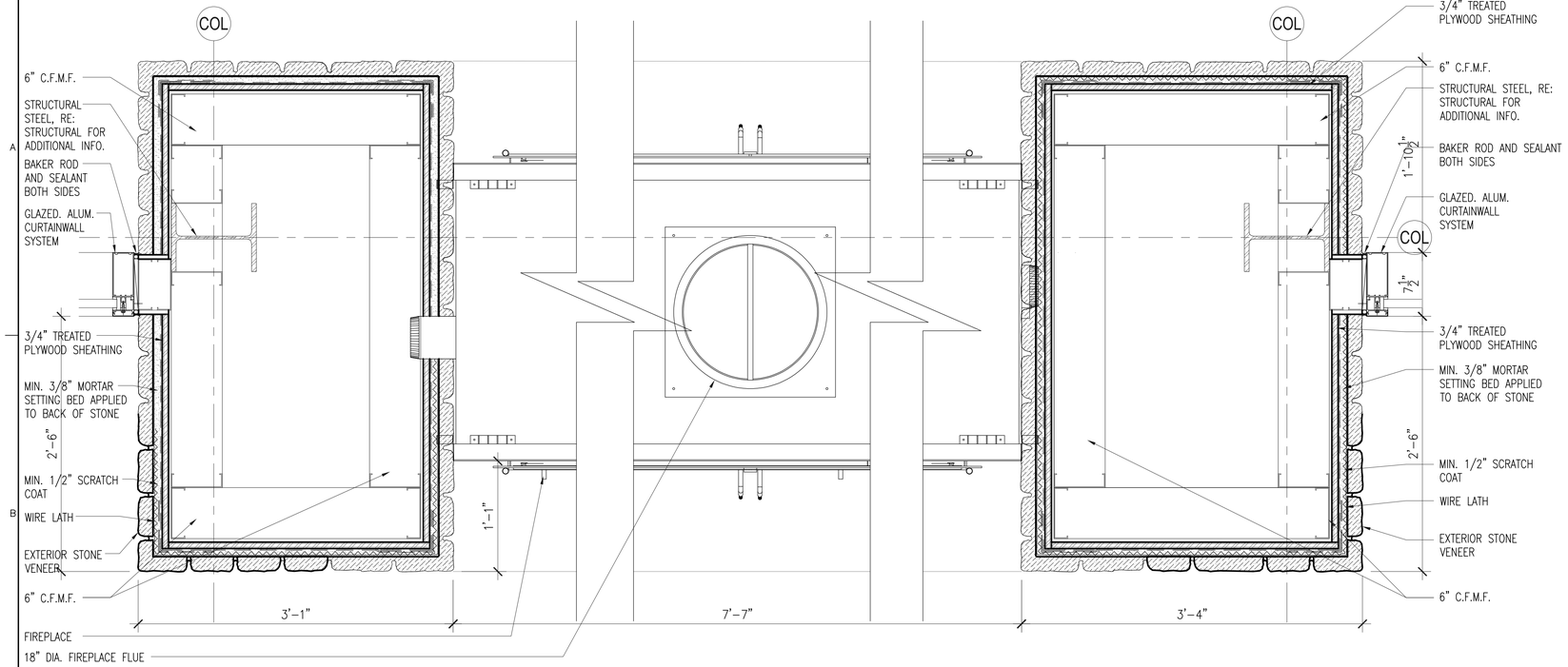

DETAIL SCALE: 1 1/2"=1'-0" 6

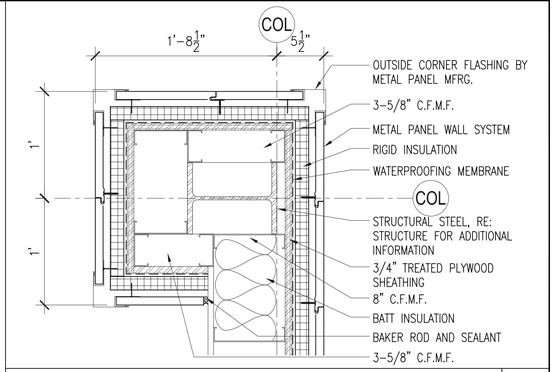

DETAIL SCALE: 1 1/2"=1'-0" 1

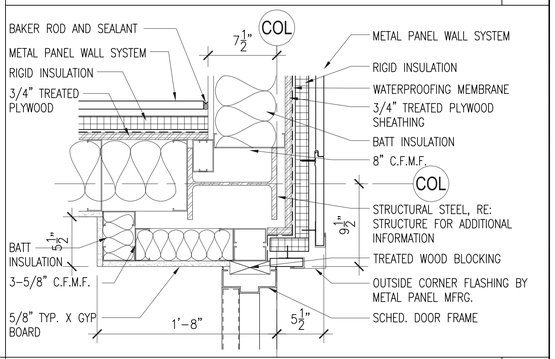

DETAIL SCALE: 1 1/2"=1'-0" 2

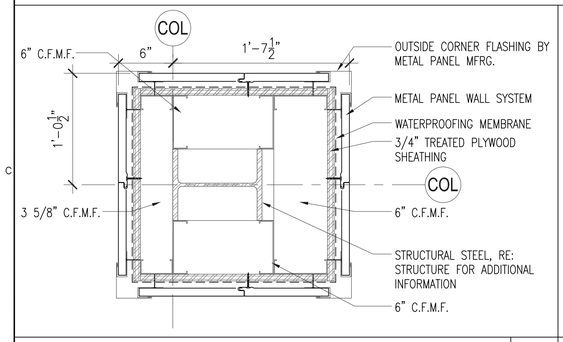

DETAIL SCALE: 1 1/2"=1'-0" 15

DETAIL SCALE: 1 1/2"=1'-0" 11

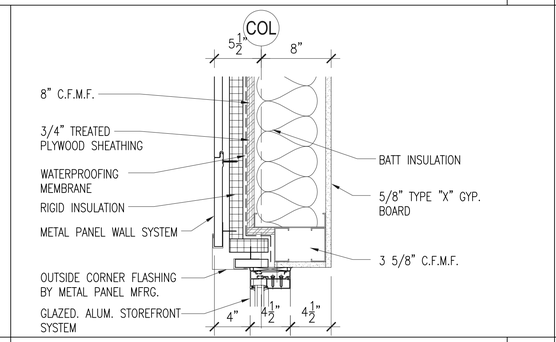

DETAIL SCALE: 1 1/2"=1'-0" 7

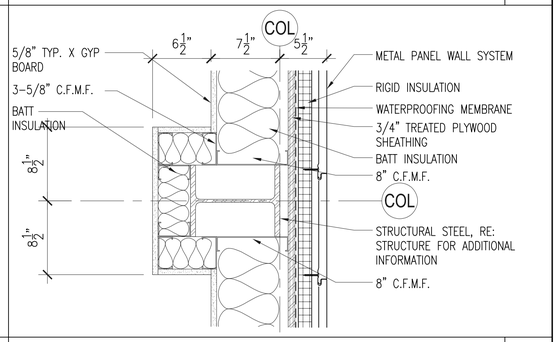

DETAIL SCALE: 1 1/2"=1'-0" 3

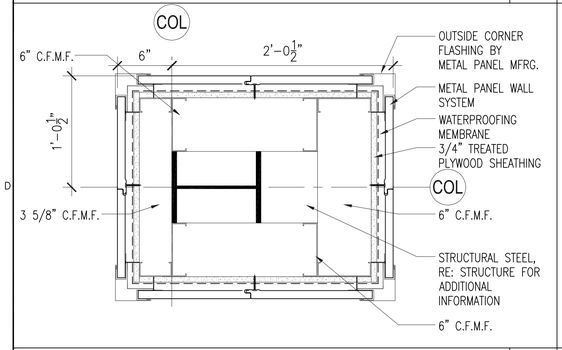

DETAIL SCALE: 1 1/2"=1'-0" 16

DETAIL SCALE: 1 1/2"=1'-0" 12

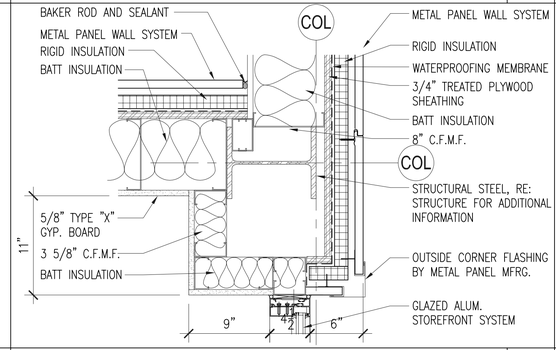

DETAIL SCALE: 1 1/2"=1'-0" 8

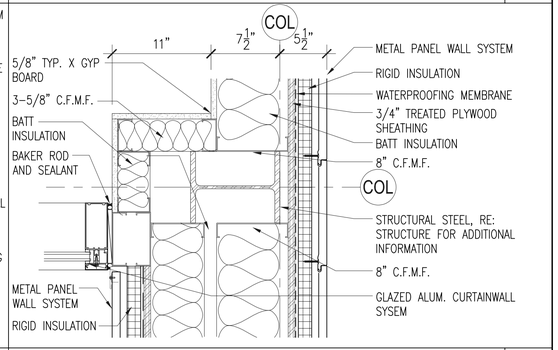

DETAIL SCALE: 1 1/2"=1'-0" 4

architects

19251 Purus Dr.
Porter, TX 77365

CONSULTANTS

BATES ALLEN PARK
BLACK COWBOY MUSEUM
630 CHARLIE ROBERTS LANE
KENDLETON TX. 77451

REGISTERED ARCHITECT STATE OF TEXAS

9/20/24

Drawing Date: 06/03/2024
Drawn By: SMA
Checked By: DDV
Scale: AS NOTED

Revisions:

DESCRIPTION	
ISSUE FOR BID & CONSTRUCTION	09/23/2024

Drawing Name

EXTERIOR DETAILS

A-501

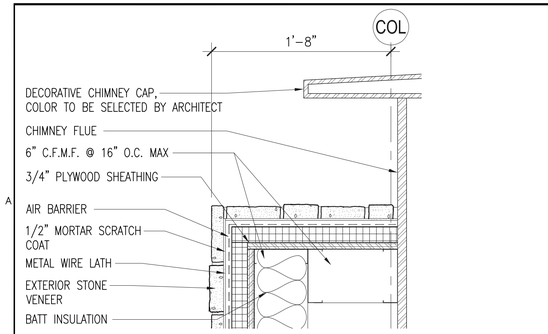

DETAIL SCALE: 1 1/2"=1'–0" 13

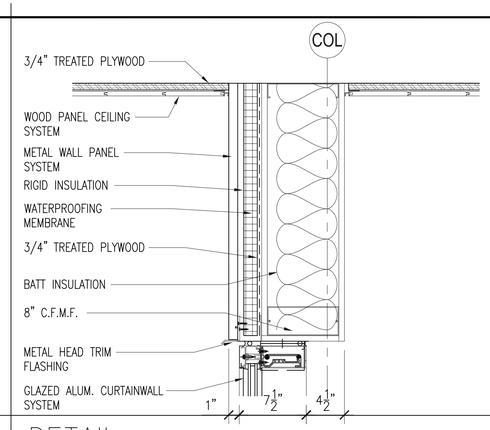

DETAIL SCALE: 1 1/2"=1'–0" 9

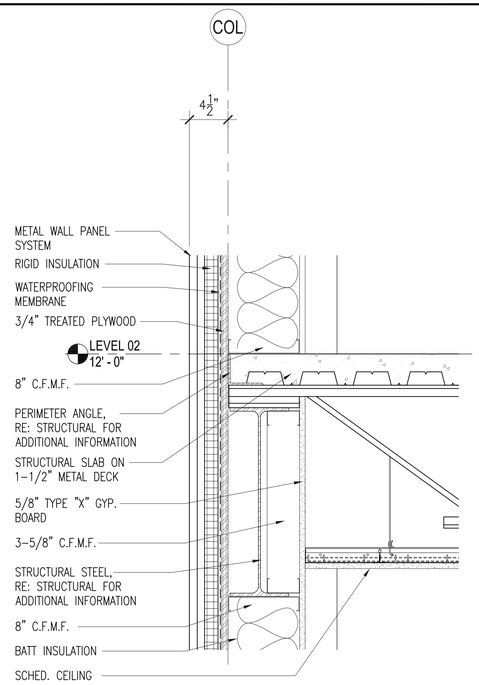

DETAIL SCALE: 1 1/2"=1'–0" 6

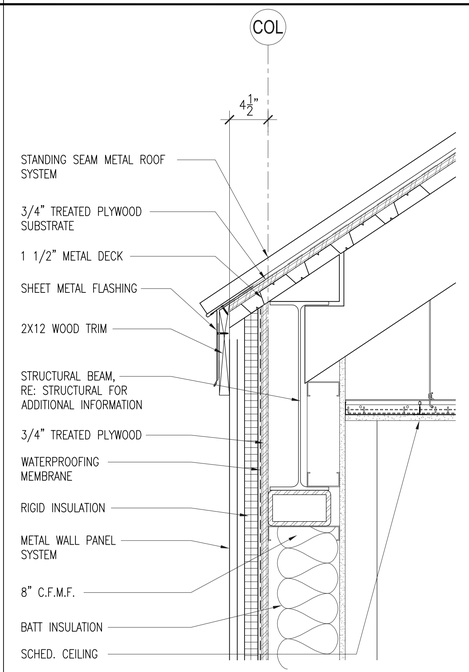

DETAIL SCALE: 1 1/2"=1'–0" 2

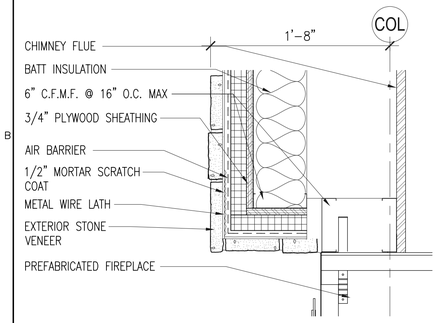

DETAIL SCALE: 1 1/2"=1'–0" 14

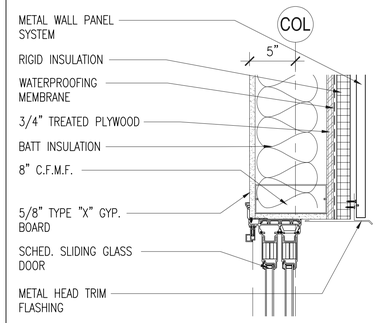

DETAIL SCALE: 1 1/2"=1'–0" 10

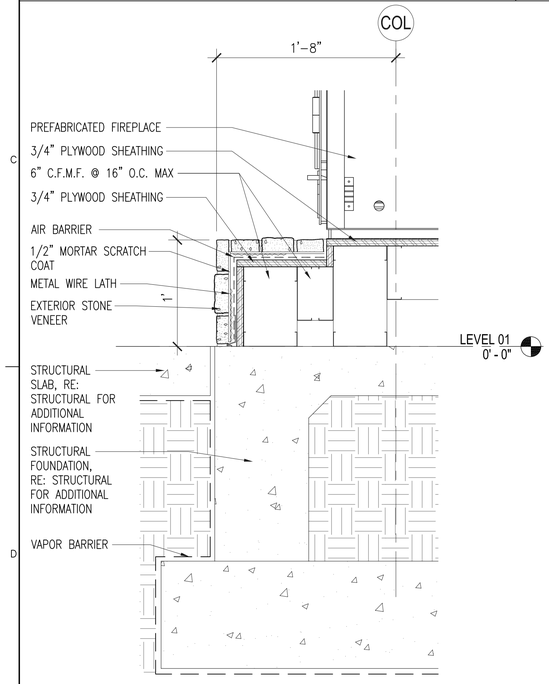

DETAIL SCALE: 1 1/2"=1'–0" 16

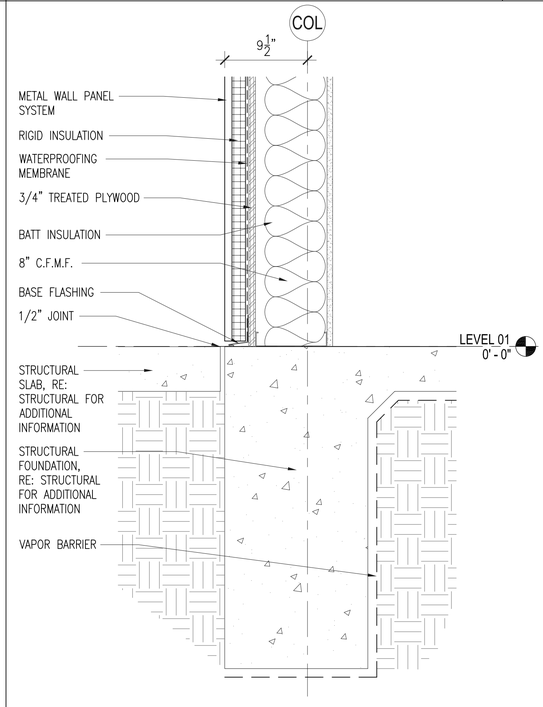

DETAIL SCALE: 1 1/2"=1'–0" 12

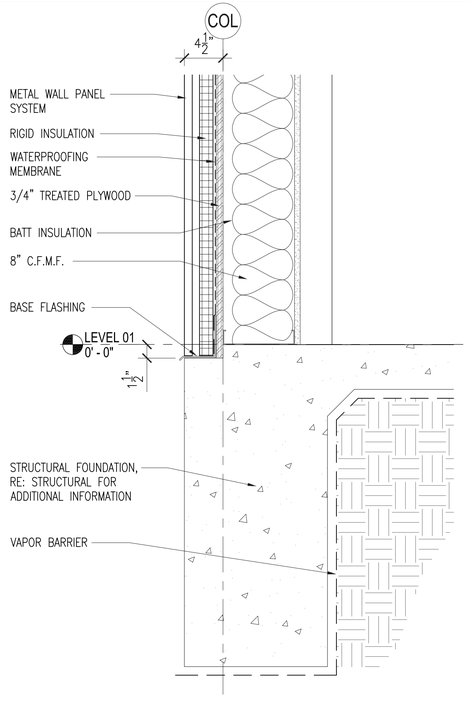

DETAIL SCALE: 1 1/2"=1'–0" 8

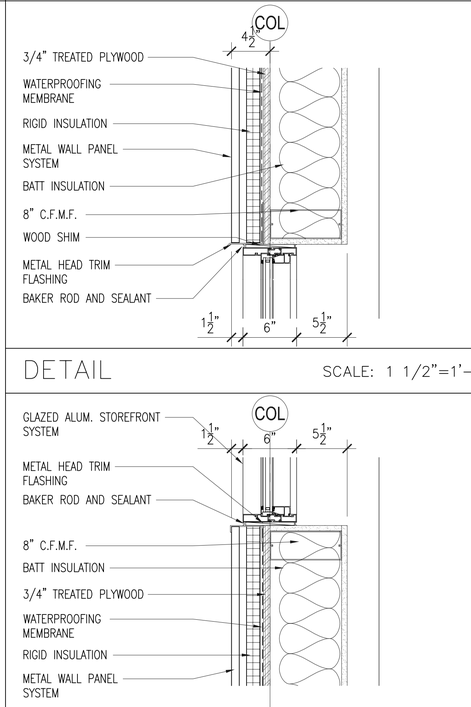

DETAIL SCALE: 1 1/2"=1'–0" 3

DETAIL SCALE: 1 1/2"=1'–0" 4

VCS architects
19251 Purus Dr.
Porter, TX 77365

CONSULTANTS

BATES ALLEN PARK
BLACK COWBOY MUSEUM
630 CHARLIE ROBERTS LANE
KENDLETON, TX. 77451

REGISTERED ARCHITECT ROSINA MARK 20006 STATE OF TEXAS
9/20/24

Drawing Date: 06/03/2024
Drawn By: SMA
Checked By: DDV
Scale: AS NOTED

Revisions:

DESCRIPTION	
ISSUE FOR BID & CONSTRUCTION	09/23/2024

Drawing Name

EXTERIOR DETAILS

A-511

A

DETAIL SCALE: 1 1/2"=1'-0" 13

DETAIL SCALE: 1 1/2"=1'-0" 9

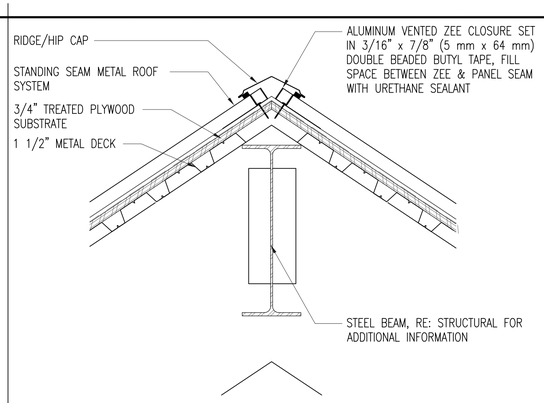

DETAIL SCALE: 1 1/2"=1'-0" 1

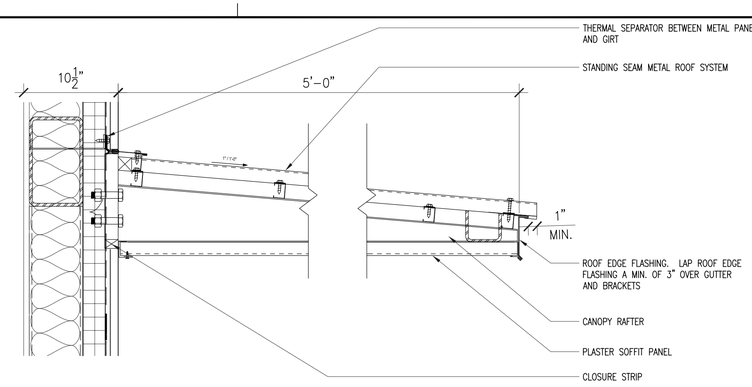

B

DETAIL SCALE: 1 1/2"=1'-0" 14

DETAIL SCALE: 1 1/2"=1'-0" 10

DETAIL SCALE: 1 1/2"=1'-0" 6

DETAIL SCALE: 1 1/2"=1'-0" 2

C

DETAIL SCALE: 1 1/2"=1'-0" 15

DETAIL SCALE: 1 1/2"=1'-0" 11

DETAIL SCALE: 1 1/2"=1'-0" 7

DETAIL SCALE: 1 1/2"=1'-0" 3

D

DETAIL SCALE: 1 1/2"=1'-0" 16

DETAIL SCALE: 1 1/2"=1'-0" 12

DETAIL SCALE: 1 1/2"=1'-0" 8

DETAIL SCALE: 1 1/2"=1'-0" 4

VCS architects
19251 Purus Dr.
Porter, TX 77365

CONSULTANTS

BATES ALLEN PARK
BLACK COWBOY MUSEUM
630 CHARLIE ROBERTS LANE
KENDLETON, TX. 77541

REGISTERED ARCHITECT
STATE OF TEXAS
9/20/24

Drawing Date: 06/03/2024
Drawn By: SMA
Checked By: DDV
Scale: AS NOTED

Revisions:

DESCRIPTION	
ISSUE FOR BID & CONSTRUCTION	09/23/2024

Drawing Name

EXTERIOR DETAILS

A-512

'D' SERIES

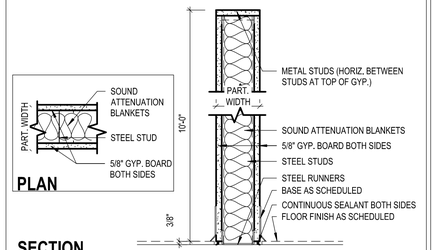

SECTION

TYPE	STUD	PART. WIDTH	MAX. HEIGHT 25 GA.	MAX. HEIGHT 20 GA.	DESIGN NO.	DESIGN STC MIN STC	DESIGN STC INSUL	EST STC W/O INSUL
D1	1 5/8"	2 7/8"	6'- 11"	8' - 2"	N / A	-	1 1/2"	-
D2	2 1/2"	3 3/4"	9' - 7"	11' - 3"	N / A	-	2 1/2"	-
D3	3 5/8"	4 7/8"	12' - 4"	14' - 11"	N / A	-	3 1/2"	-
D4	4"	5 1/4"	13' - 0"	16' - 2"	N / A	-	3 1/2"	-
D6	6"	7 1/4"	15' - 9"*	21' - 7"	N / A	-	3 1/2"	-
D8	8"	9 1/4"	-	-	N / A	-	3 1/2"	-

LIMITING HEIGHTS BASED ON SSMA/SFIA; L/240; 5 PSF
*ADD WEB STIFFENERS

'C' SERIES

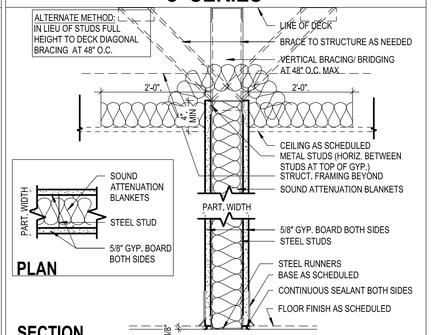

SECTION

TYPE	STUD	PART. WIDTH	MAX. HEIGHT 25 GA.	MAX. HEIGHT 20 GA.	DESIGN NO.	DESIGN STC MIN STC	DESIGN STC INSUL	EST STC W/O INSUL
C1	1 5/8"	2 7/8"	6'- 11"	8' - 2"	N / A	-	1 1/2"	-
C2	2 1/2"	3 3/4"	9' - 7"	11' - 3"	N / A	-	2 1/2"	-
C3	3 5/8"	4 7/8"	12' - 4"	14' - 11"	N / A	-	3 1/2"	-
C4	4"	5 1/4"	13' - 0"	16' - 2"	N / A	-	3 1/2"	-
C6	6"	7 1/4"	15' - 9"*	21' - 7"	N / A	-	3 1/2"	-
C8	8"	9 1/4"	-	-	N / A	-	3 1/2"	-

LIMITING HEIGHTS BASED ON SSMA/SFIA; L/240; 5 PSF
*ADD WEB STIFFENERS

'P' SERIES

SECTION

TYPE	STUD	PART. WIDTH	MAX. HEIGHT 25 GA.	MAX. HEIGHT 20 GA.	1 HOUR DESIGN NO.	DESIGN STC MIN STC	DESIGN STC INSUL	EST STC W/O INSUL
P1	1 5/8"	RE:PLAN	6'- 11"	8' - 5"	UL-U420	50	3 1/2"	-
P2	2 1/2"	RE:PLAN	9' - 7"	11' - 7"	UL-U493	50	3 1/2"	-
P3	3 5/8"	RE:PLAN	12' - 4"	15' - 5"	UL-U493	50	3 1/2"	-
P4	4"	RE:PLAN	13' - 0"	16' - 8"	UL-U493	50	3 1/2"	-
P6	6"	RE:PLAN	15' - 9"*	22' - 11"	UL-U493	50	3 1/2"	-

LIMITING HEIGHTS BASED ON SSMA / SFIA ; L/240; 5 PSF
*ADD WEB STIFFENERS

'B' SERIES

SECTION

TYPE	STUD	PART. WIDTH	MAX. HEIGHT 25 GA.	MAX. HEIGHT 20 GA.	DESIGN NO.	DESIGN STC MIN STC	DESIGN STC INSUL	EST STC W/O INSUL
B1	1 5/8"	2 7/8"	6'- 11"	8' - 2"	N / A	-	1 1/2"	-
B2	2 1/2"	3 3/4"	9' - 7"	11' - 3"	N / A	-	2 1/2"	-
B3	3 5/8"	4 7/8"	12' - 4"	14' - 11"	N / A	-	3 1/2"	-
B4	4"	5 1/4"	13' - 0"	16' - 2"	N / A	-	3 1/2"	-
B6	6"	7 1/4"	15' - 9"*	21' - 7"	N / A	-	3 1/2"	-
B8	8"	9 1/4"	-	-	N / A	-	3 1/2"	-

LIMITING HEIGHTS BASED ON SSMA/SFIA; L/240; 5 PSF
*ADD WEB STIFFENERS

'F' SERIES

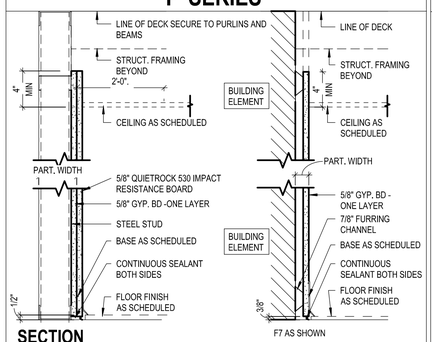

SECTION

TYPE	STUD	PART. WIDTH	MAX. HEIGHT 25 GA.	MAX. HEIGHT 20 GA.	DESIGN NO.	DESIGN STC MIN STC	DESIGN STC INSUL	EST STC W/O INSUL
F1	1 5/8"	2 1/4"	6'- 11"	8' - 2"	N/A	-	1 1/2"	-
F2	2 1/2"	3 1/8"	9' - 7"	11' - 3"	N/A	-	2 1/2"	-
F3	3 5/8"	4 1/4"	12' - 4"	14' - 11"	N/A	-		-
F4	4"	4 5/8"	13' - 0"	16' - 2"	N/A	-	3 1/2"	-
F6	6"	6 5/8"	15' - 9"*	21' - 7"	N/A	-	3 1/2"	-
F7	7/8" FC	1 1/2"	-	-	N/A	-	-	-

LIMITING HEIGHTS BASED ON SSMA / SFIA; L/240; 5 PSF
* ADD WEB STIFFENERS

'A' SERIES

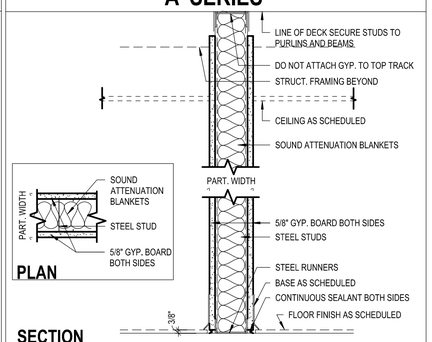

SECTION

TYPE	STUD	PART. WIDTH	MAX. HEIGHT 25 GA.	MAX. HEIGHT 20 GA.	1 HOUR DESIGN NO.	DESIGN STC MIN STC	DESIGN STC INSUL	EST STC W/O INSUL
A1	1 5/8"	2 7/8"	8'- 4"	9' - 2"	GA-WP 1340	40	1 1/2"	35
A2	2 1/2"	3 3/4"	11' - 3"	12' - 1"	UL-U494	40	2 1/2"	40
A3	3 5/8"	4 7/8"	14' - 4"	15' - 8"		40	3 1/2"	40
A4	4"	5 1/4"	15' - 4"	17' - 6"	UL-U465	40	3 1/2"	40
A6	6"	7 1/4"	19' - 9"	23' - 2"	UL-U465	40	3 1/2"	40
A8	8"	9 1/4"	-	-	UL-U465	-	3 1/2"	-

LIMITING HEIGHTS BASED ON ASTM; L/240; 5 PSF

PARTITION GRAPHIC LEGEND

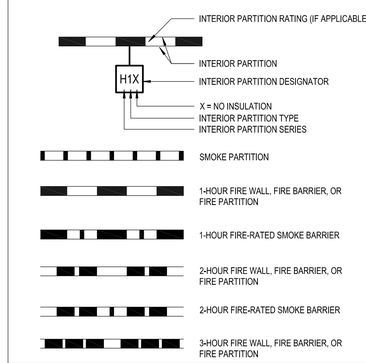

SPECIAL GRAPHIC LEGEND

PARTITION NOTES

1. THE LOCATIONS OF FIRE, SMOKE, OR FIRE/SMOKE PARTITIONS ARE INDICATED ON THE FLOOR PLANS BY LINE SYMBOLS IN THE CENTER OF THE PARTITIONS. AT THESE LOCATIONS, THE UL DESIGN ASSEMBLY LISTED WITH THE PARTITION TYPE SHALL BE COMPLIED WITH, INCLUDING FIRESTOPPING SEALANT AT THE PERIMETER OF THE PARTITION. WHERE THE PARTITION TYPE IS NOT INDICATED ON THE FLOOR PLAN AS BEING A FIRE, SMOKE, OR FIRE/SMOKE PARTITION, THE CONSTRUCTION SHALL BE IDENTICAL, EXCEPT THAT ACOUSTICAL SEALANT SHALL BE USED IN LIEU OF FIRESTOPPING SEALANT AT THE PERIMETER OF THE PARTITION.
2. ALL NEW INTERIOR PARTITIONS SHOWN ON THE FLOOR PLANS ARE TYPE 'A3', UNLESS NOTED OTHERWISE.
3. PARTITION TYPE REFERENCES ARE INDICATED ON THE FLOOR PLANS.
4. PARTITION TYPES DO NOT DETERMINE EXTERIOR WALL CONSTRUCTION. REFER TO WALL SECTIONS FOR EXTERIOR WALL CONSTRUCTION.
5. ALL PARTITIONS THAT EXTEND FROM FLOOR TO THE UNDERSIDE OF DECK ABOVE SHALL HAVE THEIR PERIMETER AND ALL PENETRATIONS SEALED SMOKETIGHT WITH ACOUSTICAL SEALANT OR FIRESTOPPING SEALANT, AS APPLICABLE.
6. ALL FIRE, SMOKE, OR FIRE/SMOKE PARTITIONS SHALL HAVE ALL CONTROL JOINTS AND EXPANSION JOINTS IN PARTITIONS CONSTRUCTED IN A MANNER SO AS TO NOT VIOLATE THE RATING, USING CONTINUOUS FIRESTOPPING MATERIAL WITHIN THE JOINT. OTHER UNRATED PARTITIONS SHALL HAVE ALL CONTROL JOINTS AND EXPANSION JOINTS IN PARTITIONS, CONSTRUCTED IN A MANNER TO RESIST SOUND TRANSMISSION, USING FIRE RESISTANT SOUND ATTENUATION BLANKET MATERIAL WITHIN THE JOINT.
7. WHERE CERAMIC TILE, PORCELAIN PAVERS, QUARRY TILE, TERRAZZO OR CEMENT ARE INDICATED TO BE APPLIED TO PARTITIONS AS A BASE OR WALL FINISH SURFACE, REPLACE THE GWB WITH 5/8" TILE BACKER BOARD THAT HAS BEEN TESTED AND CERTIFIED TO BE EQUIVALENT IN FIRE RATING TO THE GWB WHICH THEY REPLACE. THE SCHEDULED FIRE RATING OF ANY PARTITION SHALL NOT BE VIOLATED BY THE APPLICATION OF ANY FINISHES. ALSO USE L/360 DEFLECTION CRITERIA AND 20 GAUGE MINIMUM FRAMING AT THESE LOCATIONS.
8. FLOOR TO FLOOR DIMENSIONS MAY VARY. REFER TO BUILDING SECTIONS, WALL SECTIONS, AND OTHER CONTRACT DRAWINGS FOR DETERMINING FLOOR TO FLOOR DIMENSIONS.
9. CEILING HEIGHTS MAY VARY ON EITHER OR BOTH SIDES OF THE PARTITION. REFER TO FLOOR PLANS, REFLECTED CEILING PLANS AND CEILING DETAILS FOR CEILING HEIGHTS.
10. METAL STUDS SHALL BE SPACED AT 16" O.C. MAXIMUM, UNLESS NOTED OTHERWISE. LIGHT GAUGE METAL FRAMING STUDS SPACED AT 16" O.C. MAXIMUM SHALL BE USED WHERE SPECIFIED OR DETAILED. RESILIENT CHANNELS AND FURRING CHANNELS SPACED 24" O.C. VERTICALLY MAX. 4" MAX FROM TOP AND BOTTOM ENDS.
11. ALL STEEL STUDS ARE CONTINUOUS FROM FLOOR TRACK TO BOTTOM OF DECK ABOVE, UNLESS NOTED OTHERWISE. ALLOW FOR DEFLECTION WITH TOP TRACK ASSEMBLY.
12. COLD FORMED METAL FRAMING SHALL BE USED IN LIEU OF STEEL STUDS WHERE REQUIRED TO MAINTAIN STUD WIDTH INDICATED ON THE DRAWINGS.
13. ALL GYPSUM BOARD IS TO BE 5/8" THICK UNLESS NOTED OTHERWISE.
14. PARTITION TYPE REFERENCES DO NOT INCLUDE THE APPLIED FINISHES INDICATED BY THE ROOM FINISH REFERENCE AND ROOM FINISH SCHEDULE.
15. REFER TO PARTITION DETAILS, DOOR INFORMATION, AND DOOR DETAILS FOR FRAMING AND ANCHORAGE AT DOORS.
16. INSTALL DOUBLE 20 GA. STUDS AT ALL OPENINGS, HEADS, SILLS, JAMBS UNLESS NOTED OTHERWISE AT MINIMUM.
17. WHERE ITEMS RECESSED IN THE WALLS OF FIRE RATED PARTITIONS, PROVIDE ADDITIONAL GYPSUM BOARD, FIREPROOFING, OF FIRESTOPPING AROUND THE RECESSED PORTION OF ITEM, IN THICKNESS AND CONSTRUCTION AS REQUIRED TO NOT VIOLATE THE FIRE RATING OF THE PARTITION.
18. PARTITION CONDITIONS. AT ALL CONDITIONS WHERE FIRE RATED PARTITIONS ABUT OR ATTACH TO FIREPROOFED STRUCTURAL MEMBERS, THE FIRE RATING OF THE FIREPROOFED STRUCTURAL MEMBER AND THE FIRE RATING OF THE PARTITION SHALL NOT BE VIOLATED.
19. REFER TO SYMBOLS ON PLAN FOR FLOOR PLAN INDICATION OF CHANGES IN PARTITION TYPE.
20. ALL JOINTS IN GYPSUM BOARD SURFACES TO BE TAPED AND FLOATED, INCLUDING RATED PARTITIONS, UNRATED PARTITIONS, EXPOSED SURFACES, CONCEALED SURFACES, AND SURFACES ABOVE THE CEILINGS.
21. ALL SOUND ATTENUATION BLANKETS SHALL BE CONTINUOUS FOR THE FULL HEIGHT OF PARTITION AND FULL WIDTH OF THE PARTITION, UNLESS OTHERWISE NOTED.
22. PARTITION TYPES AND DETAILS SHOWN HEREIN ARE TYPICAL. WHERE PARTITION TYPES OR DETAILS VARY ONLY SLIGHTLY FROM THE TYPICAL, THE ABBREVIATION "SIM" SHALL BE USED ADJACENT TO THE PARTITION TYPE REFERENCE OR DETAIL REFERENCE. PARTITIONS OR DETAILS NOT SIMILAR SHALL BE CONSTRUCTED IN A LOGICAL MANNER USING THE PRINCIPLES EVIDENT IN THE TYPICAL PARTITION TYPES AND DETAILS, AND IN ACCORDANCE WITH SPECIFICATION SECTIONS.
23. STC RATING SHOWN IN PARTITION TABLES ARE TAKEN FROM MANUF. PRODUCT LITERATURE. ADDITIONAL STC INFORMATION IS AVAILABLE THROUGH ADDITIONAL RESOURCES.
24. ALL FIRE, SMOKE OR FIRE SMOKE PARTITIONS SHALL HAVE MECH. AND ELEC. DEVICES SEALED WITH PUTTY PACKS OR CONSTRUCTED IN A MANNER SO AS NOT TO VIOLATE THE RATING. OTHER UNRATED PARTITIONS SHALL HAVE MECH. AND ELEC. DEVICES SEALED WITH PUTTY PACKS FOR WALLS THAT EXCEED STC 45.

PARTITION PRIORITY LEGEND

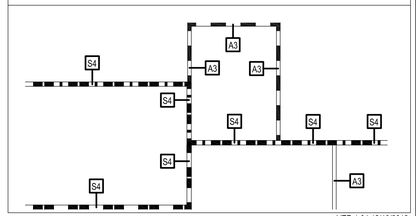

VER 1.04 12/19/2012

VCS architects
19251 Purus Dr.
Porter, TX 77365

CONSULTANTS

BATES ALLEN PARK
BLACK COWBOY MUSEUM
630 CHARLIE ROBERTS LANE
KENDLETON TX. 77451

REGISTERED ARCHITECT ROSALIND MARK STATE OF TEXAS
9/20/24

Drawing Date: 06/03/2024
Drawn By: SMA
Checked By: DDV
Scale: AS NOTED

Revisions:

DESCRIPTION	
ISSUE FOR BID & CONSTRUCTION	09/23/2024

Drawing Name

ARCHITECTURAL PARTITION SCHEDULE AND DETAILS

A-601

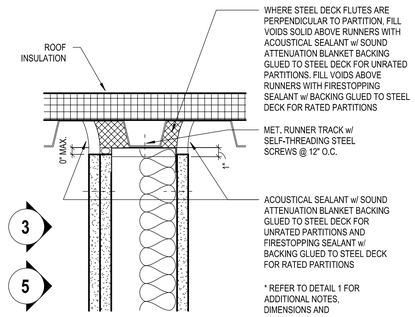

TOP ANCHORAGE OF PARTITION SCALE: 3" = 1'-0" 13

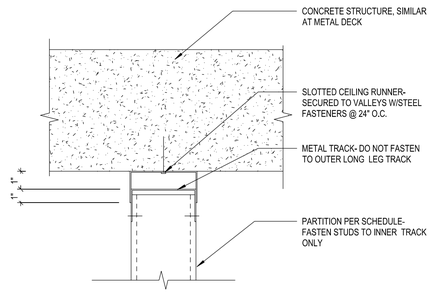

DEFLECTION HEAD @ MTL. STUDS SCALE: 3" = 1'-0" 12

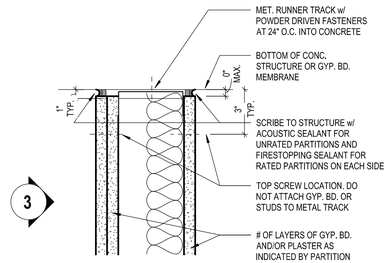

TOP ANCHORAGE OF PARTITION SCALE: 3" = 1'-0" 14

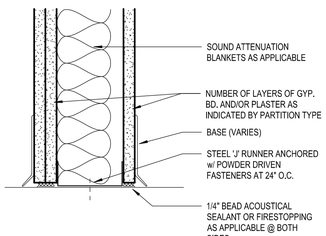

FLOOR ANCHORAGE OF PARTITION SCALE: 3" = 1'-0" 10

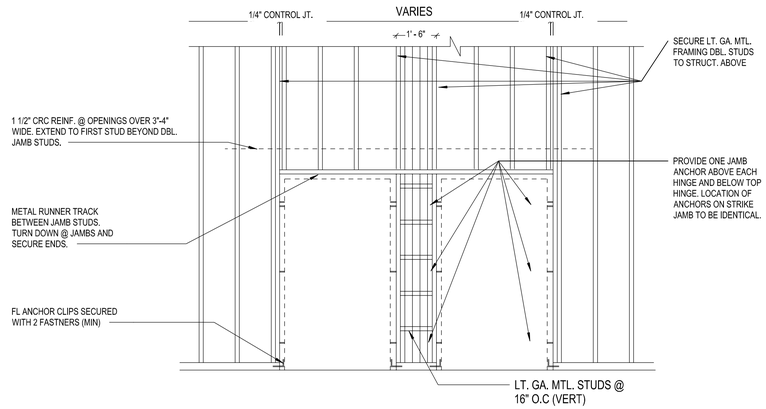

DOOR FRAMING SCALE: 3/8" = 1'-0" 2

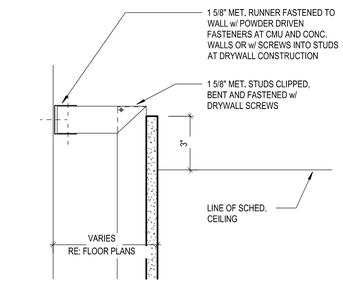

TOP ANCHORAGE OF FURRED WALL SCALE: 3" = 1'-0" 15

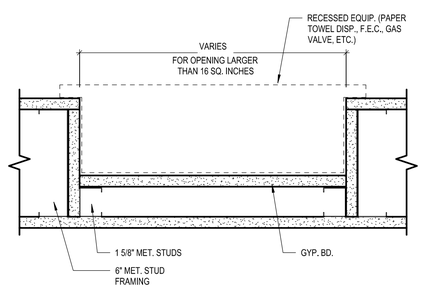

RECESSED ITEM @ RATED WALL SCALE: 3" = 1'-0" 11

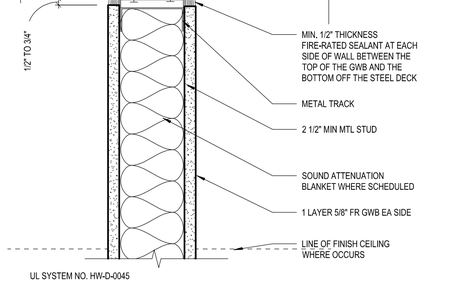

1-HR OR 2-HR ASSEMBLY T.O. WALL SCALE: 3" = 1'-0" 7

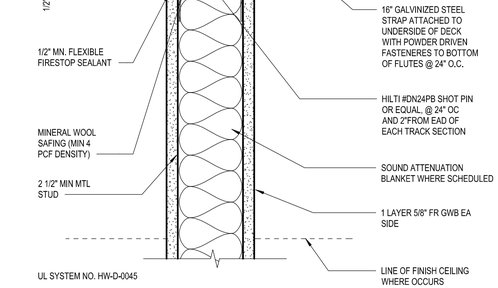

1-HR OR 2-HR ASSEMBLY T.O. WALL SCALE: 3" = 1'-0" 3

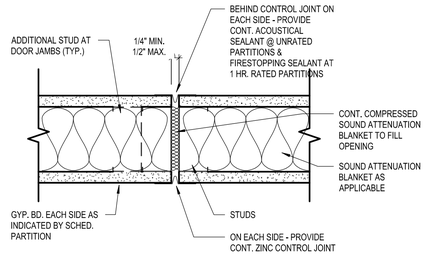

WALL CONTROL JOINT SCALE: 3" = 1'-0" 16

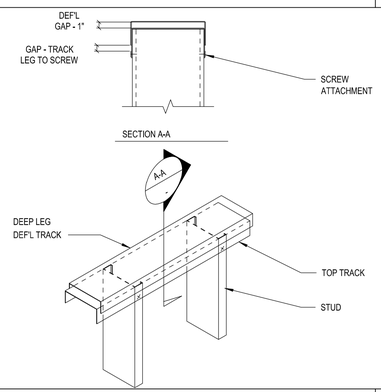

DEFLECTION HEAD – TYPICAL SCALE: 1/2" = 1'-0" 12

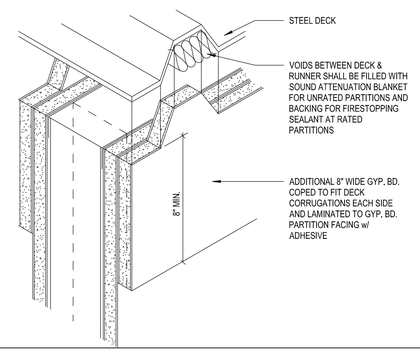

UPPER PARTITION DETAIL SCALE: NTS 8

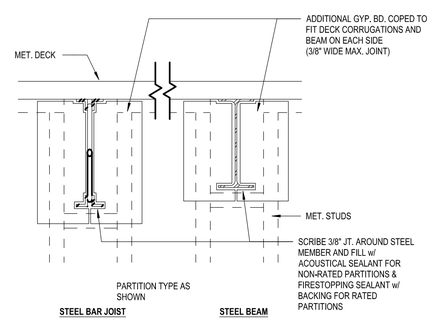

PARTITION CLOSURE @ STEEL SCALE: 1 1/2" = 1'-0" 4

architects
19251 Purus Dr.
Porter, TX 77365

CONSULTANTS

BATES ALLEN PARK
BLACK COWBOY MUSEUM
630 CHARLIE ROBERTS LANE
KENDLETON TX. 77451

REGISTERED ARCHITECT ROSEMARY MARK 23006 STATE OF TEXAS
9/20/24

Drawing Date: 06/03/2024
Drawn By: SMA
Checked By: DDV
Scale: AS NOTED

Revisions:

DESCRIPTION	
ISSUE FOR BID & CONSTRUCTION	09/23/2024

Drawing Name
ARCHITECTURAL WALL PARTITION DETAILS
A-602

ARCHITECTURAL - DOOR SCHEDULE

Door Number	Door Type	From Room: Room Name	From Room: Room #	Door: Pair Width (If Applicable)	Door: Overall Width	Door: Height	Door: Thickness	Door: Material	Door: Finish	Fire Rating	Hardware Set	Frame: Type	Frame: Material	Frame: Jamb	Frame: Head	Comments
A101	GGX	DISPLAY AREA	A101	PAIR	6' - 2"	8' - 0"	0' - 0"	ALUM.	ALUM.	N/A		BX	ALUM.			
A101A	GGX	DISPLAY AREA	A101	PAIR	6' - 2"	8' - 0"	0' - 0"	ALUM.	ALUM.	N/A		BX	ALUM.			
A102	L	DISPLAY AREA	A102	-	5' - 0"	8' - 0"	0' - 0 1/2"	SLD. CORE	PNT.	N/A		A	HM			SLIDING DOOR
A103	E	GUN ROOM DISPLAY AREA	A103	-	3' - 0"	8' - 0"	0' - 1 3/4"	SLD. CORE	PNT.	N/A		A	HM	14/A-611		SLIDING BARN DOOR
A104	N	OFFICE	A104	-	3' - 0"	8' - 0"	0' - 1 3/4"	SLD. CORE	PNT.	N/A		A	HM	12/A-611	16/A-611	
A105	A	ELECTRICAL ROOM	A105	-	3' - 0"	8' - 0"	0' - 1 3/4"	SLD. CORE	PNT.	N/A		A	HM	12/A-611	16/A-611	
A106	A	WOMEN'S RESTROOM	A106	-	3' - 0"	8' - 0"	0' - 1 3/4"	SLD. CORE	PNT.	N/A		A	HM	12/A-611	16/A-611	
A107	A	MEN'S RESTROOM	A107	-	3' - 0"	8' - 0"	0' - 1 3/4"	SLD. CORE	PNT.	N/A		A	HM	12/A-611	16/A-611	
A108	A	JANITOR'S CLOSET	A108	-	3' - 0"	8' - 0"	0' - 1 3/4"	SLD. CORE	PNT.	N/A		A	HM	12/A-611	16/A-611	
A109	N	KITCHEN	A109	-	3' - 0"	8' - 0"	0' - 1 3/4"	SLD. CORE	PNT.	N/A		A	HM	12/A-611	16/A-611	
A109A	A	KITCHEN	A109	-	3' - 0"	8' - 0"	0' - 1 3/4"	SLD. CORE	PNT.	N/A		AX	HM			
A109B	A	BAR AREA		-	3' - 0"	8' - 0"	0' - 1 3/4"	SLD. CORE	PNT.	N/A		AX	HM			
A110	A	STAIR	A110	-	3' - 0"	8' - 0"	0' - 1 3/4"	SLD. CORE	PNT.	N/A		A	HM	12/A-611	16/A-611	
A111	A	EXIT	A101	-	3' - 0"	8' - 0"	0' - 1 3/4"	SLD. CORE	PNT.	N/A		AX	HM			
A201	N	OFFICE	A201	-	3' - 0"	8' - 0"	0' - 1 3/4"	SLD. CORE	PNT.	N/A		A	HM	12/A-611	16/A-611	
A202	N	CONFERENCE ROOM	A202	-	3' - 0"	8' - 0"	0' - 1 3/4"	SLD. CORE	PNT.	N/A		A	HM	12/A-611	16/A-611	
A204	A	MECHANICAL ROOM	A204	-	3' - 0"	8' - 0"	0' - 1 3/4"	SLD. CORE	PNT.	90 MIN.		A	HM	12/A-611	16/A-611	
A205	A	CONFERENCE ROOM	A205	-	3' - 0"	8' - 0"	0' - 1 3/4"	SLD. CORE	PNT.	N/A		A	HM	12/A-611	16/A-611	
A207	A	RESTROOM	A207	-	3' - 0"	8' - 0"	0' - 1 3/4"	SLD. CORE	PNT.	90 MIN.		A	HM	12/A-611	16/A-611	
A208	A	BATHROOM	A208	-	3' - 0"	8' - 0"	0' - 1 3/4"	SLD. CORE	PNT.	N/A		A	HM	12/A-611	16/A-611	
A209	A	WALK IN CLOSET (W.I.C.)	A209	-	2' - 8"	8' - 0"	0' - 1 3/4"	SLD. CORE	PNT.	N/A		A	HM	12/A-611	16/A-611	
A212	A	BEDROOM	A212	-	3' - 0"	8' - 0"	0' - 1 3/4"	SLD. CORE	PNT.	90 MIN.		A	HM	12/A-611	16/A-611	

OVERALL DOOR SCHEDULE 5

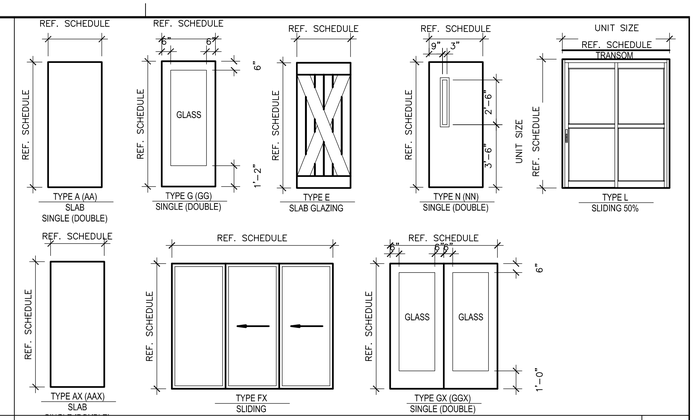

INT & EXT. DOOR TYPES SCALE: 1/4"=1'-0" 1

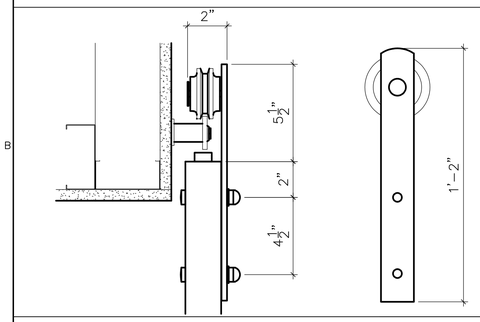

SLDG. DOOR HEAD SCALE: 3"=1'-0" 14

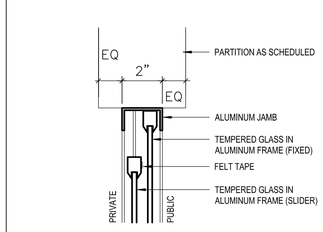

SLDG. WDW. JAMB SCALE: 3"=1'-0" 10

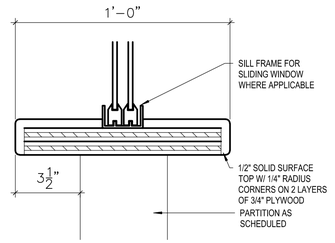

SLDG. WDW. SILL SCALE: 3"=1'-0" 6

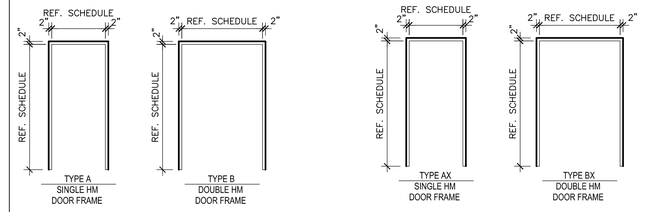

INT. & EXT. DOOR FRAMES SCALE: 1/4"=1'-0" 2

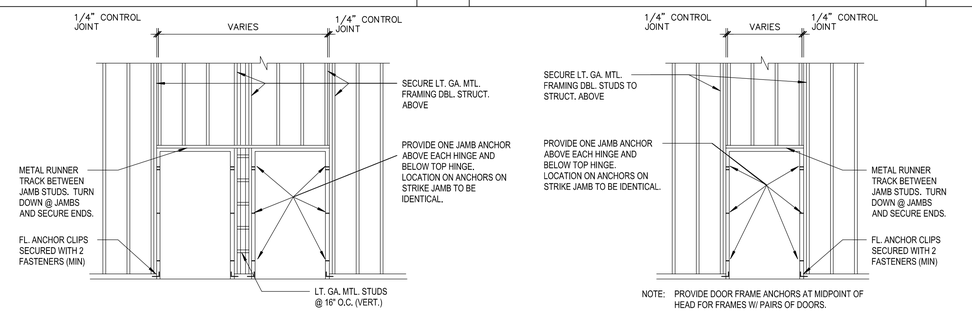

DOOR FRAMING ELEVATIONS 11

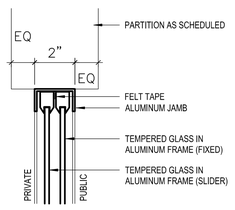

SLDG. WDW. HEAD SCALE: 3"=1'-0" 7

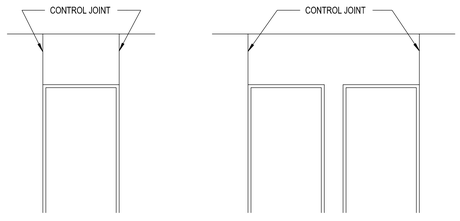

DR. CONTROL JT. ELEVATIONS SCALE: 1/4"=1'-0" 3

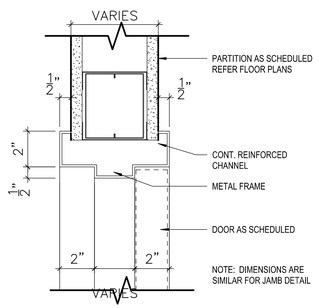

HM FRAME HEAD SCALE: 3"=1'-0" 16

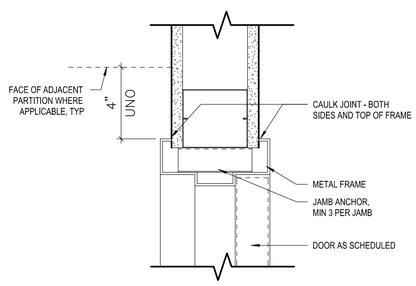

HM FRAME JAMB SCALE: 3"=1'-0" 12

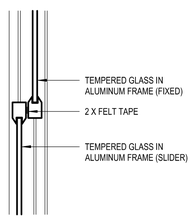

SLDG. WDW. JAMB SCALE: 3"=1'-0" 8

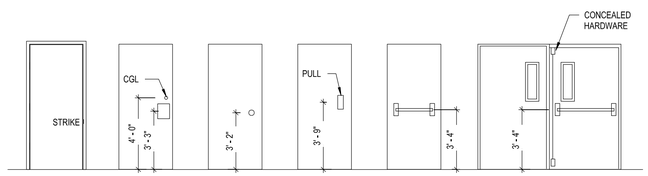

HDWR. MOUNTING HEIGHTS SCALE: 1/4"=1'-0" 4

VCS architects
19251 Purus Dr.
Porter, TX 77365

CONSULTANTS

BATES ALLEN PARK
BLACK COWBOY MUSEUM
630 CHARLIE ROBERTS LANE
KENDLETON TX. 77451

REGISTERED ARCHITECT ROSINA MARK STATE OF TEXAS
9/20/24

Drawing Date: 06/03/2024
Drawn By: SMA
Checked By: DDV
Scale: AS NOTED

Revisions:

DESCRIPTION	
ISSUE FOR BID & CONSTRUCTION	09/23/2024

Drawing Name
ARCHITECTURAL DOOR SCHEDULE / FRAME ELEVATIONS & DETAILS

A-611

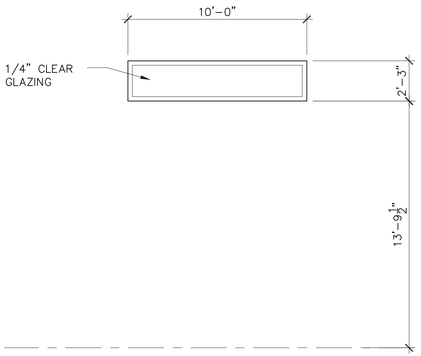

WINDOW TYPE "10" SCALE: 1/4"=1'-0" | 16

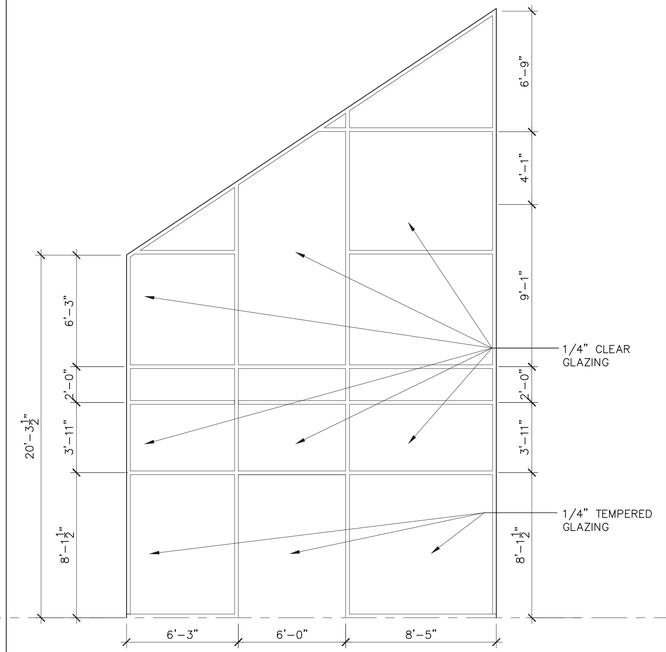

WINDOW TYPE "12" SCALE: 1/4"=1'-0" | 16

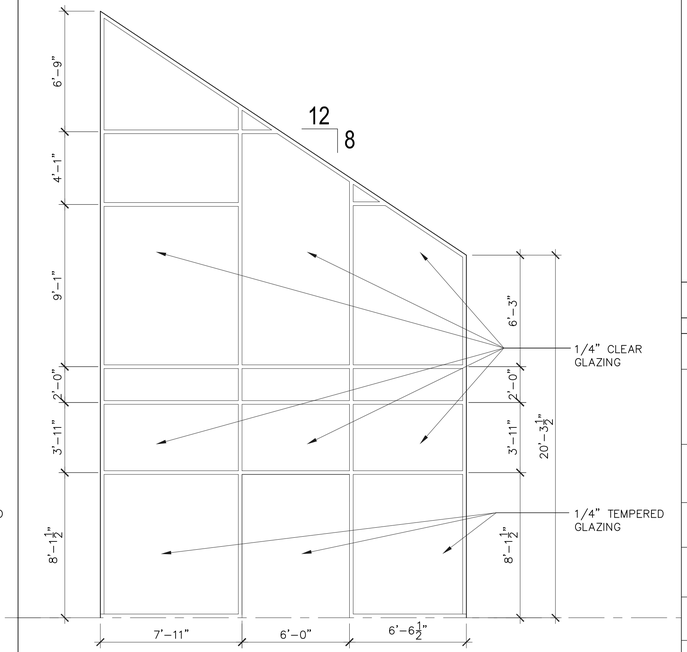

WINDOW TYPE "11" SCALE: 1/4"=1'-0" | 8

FLOOR PLAN GENERAL NOTES

A. ALL UNMARKED PARTITIONS ARE TYPE A6. ALL COLUMN FURRING TO BE PARTITION TYPE F3 UNLESS NOTED OTHERWISE.

B. ALL WINDOW AND DOOR PLAN OPENINGS ARE DIMENSIONED ON AREA PLANS.

C. FOR FIRE AND LIFE SAFETY PLANS, REFER TO A-003 DRAWING.

D. ROOF PLAN SHOWS FOR REFERENCE ONLY, REFER TO ROOF PLAN FOR NOTES AND DIMENSIONS.

E. REFER TO SHEET A-201 FOR EXTERIOR ELEVATIONS, A-301 FOR BUILDING SECTIONS AND SHEETS A-311 & A-312 FOR WALL SECTIONS.

F. REFER TO SHEET A-601 FOR ALL PARTITION DETAILS AND SHEET A-611 FOR ALL DOORS AND WINDOW DETAILS.

G. INSTALL APPROPRIATE MANUFACTURED EXPANSION JOINT COVERS AT ALL VISIBLE BUILDING EXPANSION JOINTS. TOP OF COVER OF FLOOR EXPANSION JOINT COVERS TO BE FLUSH WITH TOP OF FINISHED FLOOR.

H. ALL PARTITION DIMENSIONS ARE TAKEN FROM THE CENTERLINE OF COLUMNS AND TO THE DRYWALL FACE.

I. INSTALL BLOCKING AS REQUIRED TO SUPPORT WALL MOUNTED DEVICES.

J. AT ALL SPANDREL GLASS LOCATIONS, FACE OF INTERIOR WALL TO BE CONTINUOUS WITH ADJACENT WALL.

K. GENERAL DIMENSIONS PROVIDED ON FLOOR PLANS AND AREA PLANS DO NOT REFLECT THE ROUGH OPENING DIMENSIONS REQUIRED FOR COORDINATION WITH MASONRY JOINT COURSING. CONTRACTOR IS TO PROVIDE ROUGH OPENING FRAMING DIMENSIONS CONSISTENT WITH ENLARGED ARCHITECTURAL PLAN/SECTION DETAILS (SHEET A-501), AND DOOR SCHEDULE/DETAILS (SHEET A-611). CONTRACTOR TO SUBMIT RFI (REQUEST FOR INFORMATION) FOR ANY ROUGH OPENING DIMENSIONS NOT GIVEN IN DETAILS FOR CLARIFICATION REQUIRED.

L. THE CONSTRUCTION DOCUMENTS ARE STRICTLY A GRAPHIC REPRESENTATION AND ARE NOT TO BE SCALED. WRITTEN DIMENSIONS SHALL ALWAYS GOVERN, AND SCALE DETAILS SHALL GOVERN OVER SMALL SCALE PLANS. IF A DISCREPANCY IS FOUND TO EXIST BETWEEN SCALED AND WRITTEN DIMENSIONS OR BETWEEN LARGE SCALE DETAILS AND SMALL SCALE PLANS, THE CONTRACTOR SHALL NOTIFY THE ARCHITECT IMMEDIATELY.

M. ALL WORK SHALL BE IN COMPLIANCE WITH ALL LOCAL BUILDING CODES AND ORDINANCES, AND THE REGULATIONS OF ALL FEDERAL, STATE, AND MUNICIPAL AUTHORITIES HAVING JURISDICTION. THE CONTRACTOR SHALL BE RESPONSIBLE FOR OBTAINING ALL NECESSARY PERMITS, INSPECTIONS AND APPROVALS.

N. THE CONTRACTOR SHALL VISIT THE SITE, BECOME FAMILIAR WITH LOCAL CONDITIONS UNDER WHICH THE WORK IS TO BE PERFORMED, AND CORRELATE PERSONAL OBSERVATIONS WITH THE REQUIREMENTS OF THE CONSTRUCTION DOCUMENTS. THE CONTRACTOR IS RESPONSIBLE FOR VERIFYING THE LOCATIONS OF ALL EXISTING CONDITIONS INCLUDING UTILITIES, SANITARY, AND SEWER. THE ARCHITECT SHALL BE NOTIFIED OF ANY DISCREPANCY BETWEEN FIELD CONDITIONS AND DRAWING INDICATIONS. ALL DIMENSIONS TO EXISTING SITE ELEMENTS ARE TO BE FILED VERIFIED. THE ARCHITECT SHALL BE NOTIFIED OF ANY DISCREPANCY BETWEEN FIELD DIMENSIONS AND DRAWING DIMENSIONS.

KEY NOTES

SYMBOL	DESCRIPTION
1	
2	
3	
4	
5	
6	
7	
8	
9	
10	
11	
12	
13	

FLOOR PLAN LEGEND

SYMBOL	DESCRIPTION
A1X	PARTITION TAG REFER TO PARTITION SCHEDULE
1 / A-301	BUILDING SECTION TAG WALL SECTION TAG
1 / A-201	EXTERIOR ELEVATION TAG
1 A-211	INTERIOR ELEVATION TAG
1 / A-431	PLAN REFERENCE TAG
ROOM NAME / 101	ROOM NAME ROOM NUMBER
①	NEW DOOR WITH DOOR TAG REF DOOR SCHED
①	NEW WINDOW WITH WINDOW MARK REF GLAZING ELEVATIONS
A	COLUMN GRID DESIGNATIONS

VCS architects

19251 Purus Dr.
Porter, TX 77365

CONSULTANTS

BATES ALLEN PARK
BLACK COWBOY MUSEUM
630 CHARLIE ROBERTS LANE
KENDLETON TX. 77451

REGISTERED ARCHITECT — STATE OF TEXAS — 9/20/24

Drawing Date: 06/03/2024
Drawn By: SMA
Checked By: DDV
Scale: AS NOTED

Revisions:

DESCRIPTION	
ISSUE FOR BID & CONSTRUCTION	09/23/2024

Drawing Name

WINDOW SCHEDULE

A-621

INTERIORS - ROOM FINISH SCHEDULE

ROOM NUMBER	ROOM NAME	FLOOR FINISH	BASE FINISH	MILLWORK			WALL FINISH	CEILING FINISH	COMMENTS
				LOWER	COUNTER	UPPER			
14	BAR AREA	TIL - 1			CNT - 1				
A101	DISPLAY AREA	STC - 1 OR TIL-10					PNT-1	WDP-1	
A102	DISPLAY AREA	STC - 1 OR TIL-10					PNT-1	WDP-1	
A103	GUN ROOM DISPLAY AREA	STC - 1 OR TIL-10					PNT-1		
A104	OFFICE	CPT-1					PNT-1		
A105	ELECTRICAL ROOM	STC - 1 OR TIL-10					PNT-1		
A106	WOMEN'S RESTROOM	TIL-4					PNT-2 | TIL-2 | TIL-3		
A107	MEN'S RESTROOM	TIL-4					PNT-2 | TIL-5 | TIL-6		
A108	JANITOR'S CLOSET	STC - 1 OR TIL-10					PNT-1		
A109	KITCHEN	STC - 1 OR TIL-10					PNT-3 | TIL-9		
A110	STAIRS	WDP-1 | NST-1					PNT-1		
A201	OFFICE	CPT-1					PNT-3		
A202	OFFICE	CPT-1					PNT-3		
A203	CORRIDOR	VCT-1					PNT-3		
A204	CONFERENCE ROOM	CPT-1					PNT-3		
A205	STORAGE ROOM								
A206	MECHANICAL ROOM								
A207	RESTROOM	TIL-4					PNT-2 | TIL-2 | TIL-3		
A208	BATHROOM	TIL-8					PNT-3 | TIL-7 | TIL-8		
A209	W.I.C.	VCT-1					PNT-3		
A210	KITCHEN	VCT-1					PNT-3		
A211	LIVING AREA	VCT-1					PNT-3		
A212	BEDROOM	VCT-1					PNT-3		

INTERIORS - FINISH SCHEDULE

COUNT	ITEM CODE	ITEM DESIGNATION	MANUFACTURER	MODEL	COLOR	COLOR NUMBER	FINISH, TEXTURE, PATTERN, SIZE	COMMENTS
1	ACT-1	Acoustical Ceiling Grid & Tile					Stainless Steel	
1	ALF-1	Aluminum - Modular						
1	AWP-1	Acoustical Wall Paneling						
1	CNT-1	Countertop	POMOGRANIT	SINTERED COMPACT STONE	MAR DEL PLATA		SILK | SLAB 12MM	
1	CPB-1	Carpet - Broadloom						
1	CPT-1	Carpet - Modular	MANNINGTON	TBD	TBD			
1	DCT-1	Decorative Ceiling Grid & Tile						
1	DWP-1	Decorative Wall Paneling						
1	EPX-1	Poured Epoxy						
1	EXP	Exposed Deck / Structure						
1	FLM-1	Film - Applied						
1	FRP-1							
1	GLZ-1	Glazing						
1	GWB-1	Gypsum Wallboard						
1	INT-1	Integral Base						
1	LMF-1	Resilient Modular - Linoleum						
1	LSF-1	Resilient Sheet - Linoleum						
1	MSS-1	Stainless Steel						
1	MTL-1	Metal						
1	NST-1	Non-Slip Tread	HANDIRAMP		BLACK	NST103736BK1	ALUMINUM | 36" X 3.75"	
1	PLM-1	Plastic Laminate						
1	PLS-1	Plaster - Decorative						
1	PNT-1	Paint	SHERWIN WILLIAMS		EXTRA WHITE	SW 7006	MATTE	
1	PNT-2	Paint	SHERWIN WILLIAMS		STARGAZER	SW 9635		
1	PNT-3	Paint	SHERWIN WILLIAMS		AGREEABLE GRAY	SW 7029		
1	RAF-1	Raised Access Floor						
1	RMF-1	Resilient Modular - Rubber						
1	RSF-1	Resilient Sheet - Rubber						
1	RSS-1	Resilient Stair System						
1	RWB-1	Resilient Base						
1	SDT-1	Static Dissapative Tile						
1	SEC-1	Concrete - Sealed						
1	SSM-1	Surfacing						
1	STC-1	Concrete - Stained	TBD		NATURAL		POLISHED CONCRETE	OPTION 1
1	STN-1	Natural Stone - Modular						
1	TEX-1	Textiles						
1	TIL-1	Tile	QDI	QUARTZITE	GRIGIO		20 X 40 | 2CM	PORCELAIN PAVER
2	TIL-2	Tile	EMSER	INTRIGUE	WHITE W/ MIRROR	W94INTRM1212MCV	CHEVRON | 12 X 12	5' AFF - ALL WALLS
2	TIL-3	Tile	EMSER	BORIGNI	BLACK	A41BORIDGR1835	HERRINGBONE |18 X 35 DIAGONAL	4' AFF - ALL WALLS
3	TIL-4	Tile	EMSER	NOVA	FAWN	F49NOVAFA1224	MATTE | 12 X 24	
1	TIL-5	Tile	EMSER	VOLARE	CIELE	W94VOLAC1212MO	GLASS/PORCELAIN | STRAIGHT | 12 X 12 MOSAIC MESH	5' AFF - ALL WALLS
1	TIL-6	Tile	EMSER	DUNHAM	PATTERN	F45DUNHBU1223	STRAGHT STACKED | 12 X 23	4' AFF - ALL WALLS
1	TIL-7	Tile	EMSER	EDGE	GRAY	W80EDGEGR1212MCV	GLASS | STRAGHT | 12 X 12 MESH CHEVRON	ACCENT TILE
1	TIL-8	Tile	EMSER	MOTION	CUE	F45MOTICU1224	12 X 24	SHOWER WALLS + FLOOR
1	TIL-9	Tile	EMSER	PASSION	GRIS	W32PASSGR0308	GLOSSY | 3 X 8	ACCENT TILE
1	TIL-10	Tile	EMSER	BORIGNI	GRAY	A41BORIGR1835	35 X 35 | 18 X 35	
1	TRZ-1	Terrazzo						
1	VCT-1	Vinyl Composition Tile	AMTICO	AMTICO SIGNATURE	ASHDOWN PLUM	AROW8000	6 X 36	
1	VMF-1	Resilient Modular - Vinyl						
1	VSF-1	Resilient Sheet - Vinyl						
1	WCG-1	Corner Guard						
1	WCV-1	Veneer - Composite						
1	WDP-1	Wood Planks	TBD	TONGUE & GROOVE	DURASEAL | GUNSTOCK		SATIN | 4" OR 5" | RECTIFIED EDGE	NO VEE ON EDGE
1	WDV-1	Veneer- Wood Veneer						
1	WOS-1	Walk-Off System						
1	WPP-1	Wall Protection						
1	WWB-1	Wood Base						

FINISH FLOOR LEGEND

SYMBOL	DESCRIPTION
	CPT-1
	CPT-2
	HARDWOOD
	RESILIENT FLOORING-1
	RESILIENT FLOORING-2
	SEALED CONCRETE
	STONE TILE
	TERRAZZO-1
	TERRAZZO-2
	TILE 6X6 QUARRY
	WALK-OFF MAT

INTERIOR FINISH LEGEND

FLOOR FINISH:

STC = STAINED CONCRETE
CPT = CARPET TILE
RFT = RUBBER FLOOR TILE
CT= CERAMIC TILE

BASE FINISH:

RB = RUBBER BASE
CT = CERAMIC TILE

WALL FINISH:

PNT = INTERIOR PAINT (LOW ODOR)
TIL = CERAMIC TILE

CEILING FINISH:

ACT = ACOUSTICAL CEILING TILE
PTE = INTERIOR PAINT (EPOXY)
EXP = EXPOSED TO STRUCTURE
WDP = WOOD PLANKS

CASEWORK FINISH (HORIZONTAL OR VERTICAL):

PLM = PLASTIC LAMINATE
SSF = SOLID SURFACE FABRICATION

INTERIOR FINISH GENERAL NOTES

A. NO SUBSTITUTIONS OF FINISHES ARE ALLOWED WITHOUT APPROVAL OF ARCHITECT.

B. SUBMIT (3) SAMPLES OF EACH FINISH AS SPECIFIED ON APPROPRIATE SUBSTRATE TO ARCHITECT FOR APPROVAL PRIOR TO ORDERING.

C. FLAME SPREAD AND SMOKE DEVELOPMENT RATINGS FOR INTERIOR FINISHES ARE TO BE IN ACCORDANCE WITH APPLICABLE CODES.

D. FLOOR TRANSITIONS SHALL OCCUR AT CENTERLINE OF DOOR IN CLOSED POSITION, UNO.

E. PROVIDE TRANSITION STRIP BETWEEN SCHEDULED CARPET, RESILIENT FLOORING, STONE FLOORING, AND TILE AS REQUIRED; UNO. REFER TO SECTION 096500. COLOR TO MATCH CARPET.

F. FLOORING TRANSITIONS SHALL BE COMPLETELY FLUSH. FIELD VERIFY FLOOR SLAB AND NOTIFY ARCHITECT OF AREAS TO BE LEVELED BEFORE COMMENCING WORK. PROVIDE ADEQUATE FLOOR LEVELING MATERIAL TO MAINTAIN CONSISTENT LEVEL FLOOR SURFACE BETWEEN DIFFERENT FLOORING FINISH MATERIALS. NOTIFY ARCHITECT IMMEDIATELY IF EXCESSIVE FLOOR FLOAT IS REQUIRED.

G. TYPICAL FLOOR BASE SHALL BE RB-1, UNO. PROVIDE STRAIGHT BASE AT CARPET AND COVED BASE AT OTHER HARD FLOOR MATERIALS.

H. REFER TO REFLECTED CEILING PLANS FOR CEILING FINISH INFORMATION.

I. REFER TO INTERIOR ELEVATIONS FOR ADDITIONAL FINISH REQUIREMENTS, INCLUDING DIMENSIONS AND EXTENT OF SPECIAL WALL FINISHES.

J. GYPSUM BOARD PARTITIONS SHALL BE FLOATED OUT TO MAINTAIN A SMOOTH, EVEN, CONSISTENT APPEARANCE IN ACCORDANCE WITH SPECIFICATION SECTION 092900. NOTICEABLE JOINTS OR TAPE LINES IN GYPSUM BOARD PARTITIONS WILL NOT BE ACCEPTABLE. REFER TO FINISH SCHEDULE AND SPECIFICATIONS FOR ADDITIONAL WALL FINISH INFO.

K. PAINTED WALLS SHALL HAVE AN EVEN DEPTH OF COLOR AND REFLECTANCE. IF A PORTION OF A WALL IS REPAINTED AND AN EVEN FINISH IS NOT ACHIEVED, THE ENTIRE WALL SHALL BE REPAINTED.

L. ACCESS PANELS, ELECTRICAL PANELS, AND OTHER UNFINISHED OR PRIME COATED ITEMS SHALL BE PAINTED TO MATCH THE WALL OR CEILING.

M. TYPICAL WINDOW COVERING AT ALL PERIMETER WINDOW WALLS ARE BUILDING PROVIDED MINI-BLINDS, UNLESS NOTED OTHERWISE. GC TO PROTECT FROM DAMAGE THROUGHOUT THE DURATION OF CONSTRUCTION. PRIOR TO TENANT MOVE-IN, MINI-BLINDS ARE TO BE CLEANED AND REINSTALLED.

N. ELECTRICAL COMMUNICATION DEVICES AND COVER PLATES SHALL BE WHITE, UNO.

O. WALLS SHALL RECEIVE [PT-1] AND RB-1, TYPICAL, UNO. ALLOW FOR PRIMER AND TWO TOPCOATS FOR PAINT APPLICATION OVER GYPSUM BOARD WITH [EGGSHELL] [SEMIGLOSS] FINISH.

P. WHEN A CEILING RECEIVES A COLOR OTHER THAN THE STANDARD, PAINT CEILING MOUNTED DEVICES TO MATCH, INCLUDING DIFFUSERS.

Q. ACCESS PANELS, ELECTRICAL PANELS, AND OTHER UNFINISHED OR PRIME COATED ITEMS SHALL BE PAINTED TO MATCH THE WALL OR CEILING IN WHICH IT IS INSTALLED.

R. ACCENT PAINT SHALL EXTEND HORIZONTALLY FROM INSIDE CORNER TO INSIDE CORNER ALONG WALL. CONTINUE ACCENT PAINT ACROSS FURR-DOWNS AND BULKHEADS ONLY IF THEY ARE IN THE SAME PLANE AS THE ACCENT WALL.

S. CAULKING AND SEALANT SHALL MATCH SURFACE TO WHICH IT IS APPLIED, UNO. SUBMIT COLOR CHART FOR ARCHITECT'S SELECTION. WHERE TWO DIFFERENT MATERIALS/COLORS ALIGN IN THE SAME PLANE, MATCH THE DARKER COLOR.

T. PAINT HOLLOW METAL DOORS SAME COLOR AS FRAME, TYPICAL, UNO. HOLLOW METAL FRAMES SHALL BE SEMI-GLOSS. PAINTED METAL RAILINGS SHALL HAVE PRIMER AND TWO COATS OF EPOXY PAINT WITH POLYURETHANE TOPCOAT.

U. SCHEDULED FLOOR FINISH TO RUN CONTINUOUSLY UNDERNEATH MILLWORK, UNO.

INTERIOR ELEVATION LEGEND

SYMBOL	DESCRIPTION
BK 9034	MILLWORK ELEVATION TYPE NOMINAL WIDTH IN INCHES NOMINAL HEIGHT IN INCHES
23	ACCESSORY TAG
XXXX	EQUIPMENT TAG, REFER TO FIXED EQUIPMENT, A-662
SIM H3 A-301	SECTION TAG REFER TO SECTION AS INDICATED
SIM H3 A-301	ELEVATION TAG REFER TO ELEVATION AS INDICATED
56	REFERENCED NOTE TAG REFER TO REFERENCED NOTE ON THIS SHEET AS INDICATED
	WOOD GRAIN DIRECTION INDICATOR
RWB-1	WALL BASE FINISH TAG, REFER TO FINISH SCHEDULE
GLZ-1	WALL FINISH TAG, REFER TO FINISH SCHEDULE
	GLASS INDICATOR
P.O.O.	POINT OF ORIGIN

KEYED NOTES

NUMBER	DESCRIPTION

Finish Tags:

*See Schedule named INTERIORS - FINISH SCHEDULE - NOTEBLOCK

Floor:	Base:	Wall:	Ceiling:	Millwork:	Misc:
ALF-1	INT-1	AWP-1	ACT-1	PLM-1	FLM-1
CPT-1	RWB-1	DWP-1	DCT-1	SSM-1	MTL-1
CPB-1	WWB-1	FRP-1	EXP	WCV-1	PLS-1
SEC-1		GLZ-1		WDV-1	RSS-1
STC-1		GWB-1			MSS-1
EPX-1		PNT-1			TEX-1
RSF-1		TIL-1			
RAF-1		WPP-1			
LMF-1		WCG-1			
RMF-1					
VMF-1					
LSF-1					
VSF-1					
SDT-1					
STN-1					
TRZ-1					
TIL-1					
VCT-1					
WOS-1					

Finish Tags:

*See Schedule named INTERIORS - FINISH SCHEDULE - NOTEBLOCK

Floor:	Base:	Wall:	Ceiling:	Millwork:	Misc:
ALF-1	INT-1	AWP-1	ACT-1	PLM-1	FLM-1
CPT-1	RWB-1	DWP-1	DCT-1	SSM-1	MTL-1
CPB-1	WWB-1	FRP-1	EXP	WCV-1	PLS-1
SEC-1		GLZ-1		WDV-1	RSS-1
STC-1		GWB-1			MSS-1
EPX-1		PNT-1			TEX-1
RSF-1		TIL-1			
RAF-1		WPP-1			
LMF-1		WCG-1			
RMF-1					
VMF-1					
LSF-1					
VSF-1					
SDT-1					
STN-1					
TRZ-1					
TIL-1					
VCT-1					
WOS-1					

VCS architects
19251 Purus Dr.
Porter, TX 77365

CONSULTANTS

BATES ALLEN PARK
BLACK COWBOY MUSEUM
630 CHARLIE ROBERTS LANE
EAST BERNARD, TX 77435

REGISTERED ARCHITECT ROSINA MARK 26006 STATE OF TEXAS
9/20/24

Drawing Date: 06/03/2024
Drawn By: SMA
Checked By: DDV
Scale: AS NOTED

Revisions:

DESCRIPTION	
ISSUE FOR BID & CONSTRUCTION	09/23/2024

Drawing Name

ARCHITECTURAL FINISH SCHEDULE AND DETAILS

A-681

MECHANICAL SPECIFICATIONS

PROVIDE EQUIPMENT INDICATED ON THE DRAWINGS, AND AS REQUIRED FOR A COMPLETE FUNCTIONING SYSTEM.

DEFINITIONS: FURNISH MEANS TO SUPPLY AND DELIVER TO PROJECT SITE, READY FOR INSTALLATION. INSTALL MEANS TO PLACE IN POSITION AND MAKE CONNECTIONS FOR SERVICE OR USE. PROVIDE MEANS TO FURNISH AND INSTALL, COMPLETE AND READY FOR INTENDED USE.

WARRANTY: PROVIDE LABOR AND MATERIALS TO REPAIR OR REPLACE DEFECTIVE PARTS AND MATERIALS AS REQUIRED FOR ONE YEAR AFTER SUBSTANTIAL COMPLETION OR OWNER ACCEPTANCE OF THE COMPLETED PROJECT. PROVIDE A SEPARATE LINE ITEM DEDUCT AMOUNT ON THE PROPOSAL FORM TO DELETE WARRANTY SERVICE, AT THE OWNER'S OPTION.

PROVIDE OPERATION MANUALS, MAINTENANCE MANUALS AND SCHEMATICS FOR ALL MECHANICAL EQUIPMENT INSTALLED.

COORDINATION: COORDINATE WITH THE WORK OF OTHER SECTIONS, EQUIPMENT FURNISHED BY OTHERS, REQUIREMENTS OF THE OWNER, AND WITH THE CONSTRAINTS OF THE EXISTING CONDITIONS OF THE PROJECT SITE.

ROOF PENETRATIONS SHALL COMPLY WITH "SMACNA" AND "NRCA" STANDARDS, AND WITH THE REQUIREMENTS OF THE EXISTING ROOFING WARRANTY, IF APPLICABLE. DO NOT PERFORM ROOFING PENETRATIONS IN A MANNER WHICH WOULD VOID OR OTHERWISE LIMIT THE EXISTING ROOF WARRANTY.

DUCT DIMENSIONS: UNLESS OTHERWISE NOTED, DUCT DIMENSIONS ON THE DRAWINGS ARE INSIDE CLEAR DIMENSIONS.

SHEETMETAL DUCTWORK: PROVIDE SHEETMETAL DUCTWORK FABRICATED AND INSTALLED IN ACCORDANCE WITH ASHRAE AND SMACNA STANDARDS, FOR 1" W.G. PRESSURE CLASS, SEAL CLASS "A". SHEETMETAL SHALL BE GALVANIZED SHEET STEEL OF LOCK FORMING QUALITY, WITH G90 ZINC COATING. SHEET STEEL SHALL COMPLY WITH ASTM A653 STANDARD SPECIFICATION FOR STEEL SHEETMETAL, ZINC COATED (GALVANIZED) OR ZINC-IRON ALLOY-COATED (GALVANNEALED) BY THE HOT DIP PROCESS, AND A924 STANDARD SPECIFICATION FOR GENERAL REQUIREMENTS FOR SHEET, METALLIC-COATED BY THE HOT DIP PROCESS. ALL ANGLE IRON USED FOR SUPPORT SHALL BE GALVANIZED. CONNECTIONS TO WALLS OR FLOOR SHALL BE AIR TIGHT WITH ANGLE IRON AND CAULKING. SEAL ALL DUCT SEAMS, TRANSVERSE AND LONGITUDINAL, AIR TIGHT. PROVIDE TURNING VANES AT ALL 90° ELBOWS.

FIBER GLASS DUCT BOARD IS AN ACCEPTABLE ALTERNATIVE IF APPROVED BY OWNER AND THE LOCAL BUILDING CODE OFFICIAL. PRODUCT AND INSTALLATION MUST MEET NAIMA STANDARDS AND OTHER APPLICABLE CODES AND REGULATIONS.

TRAPEZE DUCT HANGERS: PROVIDE MINIMUM 1" X 2" X 1" X 18 GAUGE CHANNELS WITH MINIMUM 1" X 18 GAUGE STRAPS TO STRUCTURAL SUPPORT.

ROUND SHEET METAL DUCT: PROVIDE SPIRAL SEAM (ALL SIZES) OR SNAP LOCK (DUCT SIZES UP TO 10") GALVANIZED STEEL COMPLYING WITH SMACNA STANDARDS. SPIRAL SEAM DUCTWORK SHALL HAVE SMACNA SEAM TYPE RL-1.

EXPOSED DUCTWORK: EXPOSED DUCTWORK SHALL BE CLEANED OF DEBRIS AND OIL, THEN WIPED DOWN WITH VINEGAR OR OTHER SURFACE PREPARING CHEMICAL TO PREPARE DUCT FOR PAINT.

DUCT SEALANT: PROVIDE POLYMERIC RUBBER TYPE SEALANT FOR USE ON BOTH INTERIOR LOCATED DUCTWORK AND DUCTWORK EXPOSED TO OUTDOOR CONDITIONS. SEALER SHALL HAVE HIGH BONDING STRENGTH FOR SURE, FIRST TIME SEALING OF JOINTS IN LOW, MEDIUM, AND HIGH PRESSURE DUCT SYSTEMS. SEALER SHALL BE HIGH IN SOLID CONTENT. PROVIDE A TWO PART TAPE SEALING SYSTEM, CONSISTING OF WOVEN FIBER TAPE IMPREGNATED WITH A GYPSUM MINERAL COMPOUND, AND A MODIFIED ACRYLIC/SILICONE ACTIVATOR THAT REACTS EXOTHERMICALLY WITH THE TAPE. TWO PART TAPE SEALING SYSTEM MUST BE RATED FOR BOTH INDOOR AND OUTDOOR APPLICATION. TAPE SHALL NOT CONTAIN ASBESTOS.

DUCT INSULATION: MATERIAL FOR SUPPLY AND RETURN AIR DUCT ABOVE CEILING INSIDE THE BUILDING SHALL HAVE THE EQUIVALENT THERMAL RESISTANCE OF R-8. THE REQUIRED R VALUES ARE FOR INSTALLED INSULATION WITH 25% COMPRESSION AT THE CORNERS. PROVIDE PINS AND WASHERS IN ACCORDANCE WITH SMACNA REQUIREMENTS AND AS REQUIRED TO PREVENT INSULATION FROM SAGGING. PROVIDE ADEQUATE INSULATION AT THE SUPPLY AIR DIFFUSERS TO PREVENT CONDENSATION.

FLEXIBLE DUCT : UL #181 LISTED, CLASS 1, AND CONTAIN A 0.1 PERM RATED POLYETHYLENE INNER LINER, WITH R-8 FIBERGLASS INSULATION. FLEXIBLE DUCTS SHALL BE SECURED TO RIGID SHEET METAL COLLARS AND AIR DIFFUSERS WITH NYLON TIES OR STAINLESS STEEL WORM GEAR STRAPS. SEAL ALL CONNECTIOS AND JOINTS AIRTIGHT. SUPPORT FLEXIBLE DUCTS FROM THE BUILDINGS STRUCTURE WITH MINIMUM 1" WIDE, 18 GAUGE, GALVANIZED STEEL STRAP AT MAXIMUM 4'-0" CENTERS. PROVIDE 4" WIDE SHEET METAL SADDLES AT EACH SUPPORT EACH STRAP. SAG OF FLEXIBLE DUCT BETWEEN HANGERS SHALL NOT EXCEED 1/2" PER FOOT OF SUPPORT SPACING. RADIUS FOR TURNS OF FLEXIBLE DUCTS SHALL BE AMINIMUM OF ONE DUCT DAIMETER. FLEXIBLE DUCT RUNS SHALL NOT EXCEED 10'-0" IN LENGTH AND SHALL BE THE SAME SIZE AS THE DIFFUSER NECK CONNECTION.

ROUND VOLUME DAMPERS: PROVIDE MINIMUM 20 GAUGE GALVANIZED STEEL FRAME AND BLADES, MINIMUM 3/8" SQUARE STEEL AXLE, MOLDED SYNTHETIC BEARINGS, WITH LOCKING POSITION REGULATOR. REGULATOR SHALL BE POSITIONED WITH SHEET METAL BRACKET BEYOND DUCT COVERING. WHERE POSITIONING REGULATOR IS NOT ACCESSIBLE, PROVIDE COUPLING AND EXTENSION ROD WITH REGULATOR FOR CEILING OR WALL INSTALLATION, AS REQUIRED.

RECTANGULAR VOLUME DAMPERS: PROVIDE MINIMUM 16 GAUGE GALVANIZED STEEL CHANNEL FRAME, 16 GAUGE GALVANIZED STEEL BLADES, MINIMUM ½" HEXAGONAL AXLE, BOLDED SYNTHETIC BEARINGS, WITH 3/8" SQUARE PLATED STEEL CONTROL SHAFT. LINKAGES SHALL BE CONCEALED IN THE FRAME. OPERATING SHAFT SHALL EXTEND BEYOND FRAME AND DUCT TO A LOCKING QUADRANT WITH ADJUSTABLE LEVER. MAXIMUM BLADE WIDTH SHALL NOT EXCEED 6".

DUCT TURNING VANES: PROVIDE FABRICATED TURNING VANES AND VANE RUNNERS, CONSTRUCTED IN ACCORDANCE WITH SMACNA "HVAC DUCT CONSTRUCTION STANDARDS". PROVIDE TURNING VANES CONSTRUCTED OF CURVED BLADES, SUPPORTED WITH BARS PERPENDICULAR TO BLADES, AND SET INTO SIDE STRIPS SUITABLE FOR MOUNTING IN DUCTWORK. FOLLOW SMACNA GUIDELINES FOR SPACING SUPPORT, AND CONSTRUCTION. ALL BLADES SHALL BE DOUBLE THICKNESS AIRFOIL TYPE. FLEXIBLE DUCT CONNECTORS: PROVIDE U.L. LABELED 30 OUNCE NEOPRENE COATED FIBERGLASS FABRIC DUCT CONNECTORS.

DUCT ACCESS DOORS: PROVIDE HINGED ACCESS DOORS IN DUCTWORK WHERE REQUIRED FOR ACCESS TO EQUIPMENT. PROVIDE INSULATED ACCESS DOORS FOR INSULATED DUCTWORK. CONSTRUCT OF SAME OR THICKER GAUGE SHEET METAL AS DUCT IN WHICH IT IS INSTALLED. PROVIDE FLUSH FRAMES FOR UNINSULATED DUCTS, AND EXTENDED FRAMES FOR EXTERNALLY INSULATED DUCTS. PROVIDE CONTINUOUS HINGE ON ONE SIDE, WITH ONE HANDLE-TYPE LATCH FOR ACCESS DOORS 12" HIGH AND SMALLER, AND TWO HANDLE-TYPE LATCHES FOR LARGER ACCESS DOORS.

HVAC CONTROL SYSTEM: PROVIDE ALL THE NECESSARY CONTROLS AND CONTROL WIRING IN CONDUIT COMPATIBLE FOR AHU/ACU-1, 2 & 3.

PROGRAMMABLE THERMOSTAT FOR EACH SYSTEMSHALL ENABLE THE SUPPLY FAN AND CYCLE THE COOLING AND HEATING STAGES TO MAINTAIN SPACE SETPOINT. SUPPLY FAN RUNS CONTINUOUSLY DURING THE OCCUPIED MODE.

EACH THERMOSTAT SHALL HAVE A DEAD BAND OF AT LEAST 5 DEGREES (ADJ) WITHIN WHICH THE SUPPLY OF HEATING AND COOLING IS SHUT OFF,

EACH THERMOSTAT SHALL HAVE SETBACK AND SET-UP CAPABILITY DURING THE UNOCCUPIED MODE. FOR SETBACK, THE HEATING SHALL RESTART AND TEMPORARILY OPERATE ACCORDING TO A SET-POINT AJUSTABLE DOWN TO 55 DEGREES. FOR SET-UP, THE COOLING SHALL RESTART AND TEMPORARILY OPERATE ACCORDING TO A SET-POINT ADJUSTABLE UP TO 85 DEGREES OR TO PREVENT HIGH SPACE HUMIDITY LEVELS.

EACH SYSTEM SHALL BE PROVIDED WITH A MOTORIZED OUTSIDE AIR DAMPER THAT WILL AUTOMATICALLY SHUT WHEN THE SYSTEM OR SPACES SERVED ARE NOT IN USE. VENTILATION OUTSIDE AIR DAMPERS SHALL BE CAPABLE OF AUTOMATICALLY CLOSING DURING PREOCCUPANCY BUILDING WARM-UP, COOL DOWN, AND SETBACK, EXCEPT WHEN VENTILATION REDUCES ENERGY COSTS (e.g., NIGHT PURGE) OR WHEN VENTILATION MUST BE SUPPLIED TO MEET CODE REQUIREMENTS.

COMMISSIONING/VERIFICATION: HVAC CONTROL SYSTEM SHALL BE TESTED TO ENSURE THAT CONROL ELEMENTS ARE CALIBRATED, AJUSTED, AND IN PROPER WORKING CONDITION.

TEST AND BALANCE: CONTRACT DIRECTLY A THIRD PARTY TO PROVIDE TEST AND BALANCE OF THE HVAC SYSTEM. THE GENERAL CONTRACTOR IS RESPONSIBLE FOR SCHEDULING. TEST AND ADJUST ALL MECHANICAL SYSTEM AND EQUIPMENT TO ASSURE PROPER BALANCE AND OPERATION. PERFORM TESTS IN ACCORDANCE WITH NEBB PROCEDURAL STANDARDS-1999 OR AABC 2002, AND ASHRAE STANDARD 111. ELIMINATE NOISE AND VIBRATION, AND ASSURE PROPER FUNCTION OF CONTROLS. SUBMIT COMPLETED TEST AND BALANCE REPORT TO OWNER'S REPRESENTIVE. BALACING CONTRACTOR SHALL BE INDEPENDENT AND CERTIFIED WITH NEBB OR AABC. BALANCE ALL SYSTEMS WITHIN 5% OF AIR FLOW INDICATED ON DRAWINGS, AND REPORT ALL DISCREPANCIES TO THE HVAC CONTRACTOR FOR CORRECTION. MARK FINAL BALANCE POSSITIONS ON DAMPERS WITH PERMANENT MARKER.

COMPLETION REQUIREMENTS: THE CONTRACTOR SHALL PROVIDE, WITHIN 90 DAYS AFTER THE DATE OF SYSTEM ACCEPTANCE, RECORD DRAWINGS AND AN OPERATING AND MAINTENANCE MANUAL TO THE BUILDING OWNER OR THE DESIGNATED REPRESANTIVE OF THE OWNER.

THE RECORD DRAWING SHALL BE OF THE ACTUAL INSTALLATION AND INCLUDE AS A MINIMUM THE LOCATION AND PERFORMANCE DATA ON EACH PIECE OF EQUIPMENT, GENERAL CONFIGURATION OF DUCT AND PIPE DISTIBUTION SYSTEM INCLUDING SIZES, AND THE TERMINAL AIR OR WATER DESIGN FLOW RATES.

THE OPERATING AND MAINTENANCE MANAULS SHALL BE IN ACCORDANCE WITH INDUSTRY-ACCEPTED STANDARDS AND SHALL INCLUDE, AT A MINIMUM, THE FOLLOWING; (A) SUBMITTAL DATA STATING EQUIPMENT SIZE AND SELECTED OPTIONS FOR EACH PIECE OF EQUIPMENT REQUIRING MAINTENANCE; (B) OPERATION MANUALS AND MAINTENANCE MANUALS FOR EACH PIECE OF EQUIPMENT REQUIRING MAINTENANCE, EXCEPT EQUIPMENT NOT FURNISHED AS PART OF THE PROJECT. REQUIRED ROUTINE MAINTENANCE ACTIONS SHALL BE CLEARLY IDENTIFIED; (C) NAMES AND ADDRESSES OF AT LEAST ONE SERVICE AGENCY; (D) HVAC CONTROLS SYSTEMS MAINTENANCE AND CALIBRATION INFORMATION, INCLUDING WIRING DIAGRAMS, SCHEMATICS, AND CONTROL SYSTEM SEQUENCE DESCRIPTIONS. DESIRED OR FIELD-DETERMINED SET-PIONTS SHALL BE PERMANETLY RECORDED ON CONTROL DRAWINGS AT CONTROL DEVICES OR, FOR DIGITAL CONTROL SYSTEMS, IN PROGRAMMING COMMENTS; (E) A COMPLETE NARRATIVE OF HOW EACH SYSTEM EACH SYSTEM IS INTENDED TO OPERATE, INCLUDING SET-POINTS.

HVAC GENERAL NOTES

1. THE INTENT OF THESE PLANS AND SPECIFICATIONS IS TO INCLUDE ALL LABOR, EQUIPMENT, MATERIALS, AND SERVICES NECESSARY TO FURNISH, INSTALL, TEST, AND ADJUST A COMPLETE WORKABLE HEATING, VENTILATION, AND AIR CONDITIONING SYSTEM AS SHOWN, PRESCRIBED, OR REASONABLY IMPLIED BUT NOT LIMITED TO THAT EXPLICITLY INDICATED IN THE CONTRACT DOCUMENTS, BUT NECESSARY FOR THE PROPER EXECUTION AND COMPLETION OF THE INTENT THEREOF.
2. THE ENTIRE INSTALLATION SHALL CONFORM TO THE REQUIRMENTS OF THE APPLICABLE CODES AND REGULATIONS REQUIRED BY AUTHORITIES HAVING JURISDICTION. IN THE EVENT OF CONFLICT BETWEEN SPECIFICATIONS, CODES, AND REGULATIONS, THE MORE RESTRICTIVE SHALL APPLY.
3. DRAWINGS FOR HVAC WORK ARE DIAGRAMATIC SHOWING THE GENERAL LOCATION, TYPE, LAYOUT, AND EQUIPMENT REQUIRED. THE DRAWINGS SHALL NOT BE SCALED FOR EXACT MEASUREMENT, REFER TO ARCHITECTURAL DRAWINGS FOR DIMENSIONS. PROVIDE ALL DUCTWORK, MATERIALS, CONNECTIONS, ACCESSORIES, FITTINGS, OFFSETS, TRANSITIONS, DAMPERS AS REQUIRED FOR A COMPLETE WORKABLE SYSTEM.
4. ALL EQUIPMENT SHALL BE INSTALLED IN STRICT ACCORDANCE WITH THE MANUFACTURER'S RECOMMENDATIONS AND APPROVED LISTING. ALL EQUIPMENT, PIPING AND SUPPORTS SHALL BE RESTRAINED IN ACCORDANCE WITH THE LATEST EDITION OF THE "GUIDLINES FOR SEISMIC RESTRAINTS OF MECHANICAL SYSTEMS AND PLUMBING PIPING SYSTEMS" BY THE SHEET METAL AND AIR CONDITIONING CONTRACTORS NATIONAL ASSOCIATION (SMACNA). ALL EQUIPMENT SHALL BE ANCHORED TO RESIST THE LATERAL FORCE REQUIREMENTS OF THE APPLICABLE CODE.
5. COORDINATE THE INSTALLATION OF THE HVAC SYSTEM WITH ALL OTHER TRADES PRIOR TO FABRICATION OR INSTALLATION. COORDINATE THE LOCATIONS OF PENETRATIONS AND FINAL LOCATION OF ALL EQUIPMENT WITH THE GENERAL CONTRACTOR. PROVIDE EQUIPMENT WEIGHTS, EQUIPMENT DIMENSIONS, PLATFORM SIZES & LOCATIONS, CURB SIZES & LOCATIONS, CONCRETE PAD SIZES AND LOCATIONS AST REQUIRED. COORDINATE LOCATIONS OF GAS & CONDENSATE LINES WITH PLUMBING CONTRACTOR. COORDINTAE LOCATIONS OF POWER, DISCONNECTS, AND CONTROL CONDUIT WITH THE ELECTICAL CONTRACTOR. COORDINATE LOCATIONS OF ALL DIFFUSERS, REGISTERS, AND GRILLES WITH ARCHITECTURAL PLANS, ELECTRICAL LIGHTING PLANS AND ARCHITECTURAL ELEVATIONS.
6. DETAILS FOR EQUIPMENT PADS, PLATFORMS, AND FLASHINGS SHALL BE AS INDICATED BY THE ARCHITECTURAL/STRUCTURAL/CIVIL DRAWINGS, UNLESS NOTED OTHERWISE.
7. ALL EQUIPMENT, DUCTS, PIPING, SUPPORTS, AND OTHER DEVICES OUTSIDE OF THE BUILDING OR EXPOSED TO WEATHER, SHALL BE COMPLETELY WEATHER-PROOFED.
8. OUTSIDE AIR INTAKES SHALL BE AT LEAST 10 FT. AWAY OR 3 FT. BELOW ANY VENT OR EXHAUST DISCHARGE.
9. ALL DUCT SIZES ARE CLEAR INSIDE DIMENSIONS. DUCTWORK SHALL BE CONSTRUCTED, ERECTED, INSULATED AND TESTED IN ACCORDANCE CHAPTER 6 OF THE 2012 INTERNATIONAL MECHANICAL CODE.
10. ALL EXHAUST FANS SHALL BE EQUIPED WITH A BACK DRAFT DAMPER.
11. DUCT AND AIR TRANSFER PENETRATIONS THRU BUILDING ASSEMBLIES REQUIRING PROTECTION SHALL BE PROTECTED WITH FIRE DAMPERS, SMOKE DAMPERS, COMBINATION SMOKE/FIRE DAMPERS AND CEILING RADIATION DAMPERS IN ACCORDANCE WITH THE APPLICABLE CODE. DUCTS NOT REQUIRING DAMPERS SHALL COMPLY WITH THE APPLICABLE CODE.
12. INSTALL SMOKED DETECTORS AND PROVIDE FOR SMOKE DETECTION AND AUTOMATIC SHUT-OFF OF ALL AIR HANDLING EQUIPMENT IN ACCORDANCE WITH THE APPLICABLE CODE.
13. UNLESS NOTED OTHERWISE, ALL LINE VOLTAGE WIRING, CONDUIT, FINAL CONNECTIONS, DISCONNECTS, STARTERS, AND OVER CURRENT PROTECTION DEVICES SHALL BE FURNISHED AND INSTALLED BY THE ELECTRICAL CONTRACTOR AS INDICATED ON THESE MECHANICAL DRAWINGS AND/OR ELECTRICAL DRAWINGS AND/OR ELECTRICAL SECTION OF THE SPECIFICATIONS.
14. INSTALL ALL LOW VOLTAGE HVAC CONTROL WIRE AND DEVICES PER PLAN. ALL WIRE SHALL BE IN CONDUIT PROVIDED AND INSTALLED BY THE ELECTICAL CONTRACTOR UNLESS NOTEDED OTHERWISE.
15. PROVIDE OWNER WITH THREE COPIES OF A CERTIFIED AIR BALANCE REPORT PREPARED IN BY A THIRD PARTY CERTIFIED BY THE AABC OR NEBB. TEST, ADJUST AND BALANCE THE HVAC SYSTEM IN ACCORDANCE WITH AABC OR NEBB PROCEDURES. PROVIDE START-UP/TEST REPORTS FOR ALL AIR HANDLING EQUIPMENT, FANS, AND REFRIGERATION EQUIPMENT. TEST AND VERIFY PROPER OPERATION OF ALL MAKE-UP AIR/EXHAUST AIR INTERLOCK SYSTEMS AND THIER SEQUENCES OF OPERATION. BALANCE ALL AIR FLOWS WITHIN 5% OF DESIGN VALUES. PERMANENTLY MARK BALANCE POSITION OF ALL REGULATING DEVICES.
16. PROVIDE OWNER WITH THREE SETS OF AS-BUILT PLANS AND OPERATIONS AND MAINTENANCE MANUALS. CLEARLY IDENTIFY ALL EQUIPMENT WITH PERMANENT PLASTIC OR METAL LABELS/TAGS (PEN MARKING NOT ACCEPTABLE).
17. PROVIDE ONE YEAR WARRANTY ON ALL LABOR, PARTS AND MATERIALS.
18. ANY CHANGE OR DEVIATION FROM THESE PLANS OR SPECIFICATIONS SHALL REQUIRE THE WRITTEN APPROVAL OF THE ENGINEER PRIOR TO COMMENCEMENT OF SUCH WORK.

BUILDING CODES:

CITY OF EAST BERNARD CURRENT BUILDING CODES:

2018 International Building Code with amendments
2018 International Residential Code with amendments
2018 International Property Maintenance Code with amendments
2018 International Plumbing Code with amendments
2018 International Fuel Gas Code with amendments
2018 International Mechanical Code with amendments
2018 International Fire Code with amendments
2018 International Energy Code with amendments
2018 International Swimming Pool & Spa Code
2020 National Electrical Code with amendments

LEGEND

AxB		DUCT WORK (WIDTHxDEPTH)
AxB		LINED DUCT WORK (WIDTHxDEPTH DIMENSIONS ARE FOR I.D.)
		SUPPLY DUCT, SECTION
		RETURN DUCT, SECTION
		EXHAUST DUCT, SECTION
OR D		RISE OR DROP IN DIRECTION OF AIR FLOW
	FLEX. CONN.	FLEXIBLE CONNECTION
		DUCT TRANSITION, ROUND AND RECTANGULAR
		SPLITTER DAMPER
		EXTRACTOR AT BRANCH DUCT
		TURNING VANES
		FLEXIBLE DUCT
		SINGLE LINE DUCT WORK
	AVD	AUTOMATIC VOLUME DAMPER
	MVD	MANUAL VOLUME DAMPER
	BDD	BACKDRAFT DAMPER
	MD	MODULATING DAMPER
	AFD	AUTOMATIC FIRE DAMPER
	AD	ACCESS DOOR
	SD	SUPPLY DIFFUSER
	RR	RETURN REGISTER
	ER	EXHAUST REGISTER
	SWR	SIDE WALL SUPPLY REGISTER
	SWE	SIDE WALL RETURN OR EXHAUST
	LD	LINEAR DIFFUSER
D.L.	DL	DOOR LOUVER
U.C.	UC	UNDER CUT DOOR
	VAV	VARIABLE AIR VOLUME
T		THERMOSTAT
S		DUCT SMOKE DECTECTOR
	EF-	EXHAUST FAN

SPECIAL NOTICE TO CONTRACTORS

1. ALL CONTRACTORS (GENERAL CONTRACTOR AND SUB-CONTRACTORS) BIDDING THIS PROJECT ARE REQUIRED TO VISIT THE JOB SITE AND VERIFY THE EXISTING CONDITIONS PRIOR TO SUBMITTING THEIR BID. CONTRACTORS ARE TO CAREFULLY REVIEW ALL CONSTRUCTION DOCUMENTS AND NOTE ANY DISCREPANCIES BETWEEN THE CONSTRUCTION DOCUMENTS AND THE CONDITIONS OBSERVED AT THE JOB SITE PRIOR TO SUBMISSION OF ANY BID. THE BUILDING OWNER REPRESENTATIVE LISTED BELOW MAY BE CONTACTED FOR ACCESS TO THE JOB SITE.
2. CONTRACTORS ARE RESPONSIBLE FOR VERIFYING THE LOCATION AND CONDITION OF ALL POINTS OF CONNECTION, LOCATION AND CONDITION OF ALL BUILDING (ROOF/FLOOR/CEILING) PENETRATIONS, LOCATION AND CONDITION OF ALL UTILITIES AND BUILDING SYSTEMS INCLUDING, BUT NOT LIMITED TO, GAS, WATER, SEWER, VENT, ELECTRICAL, BUILDING MECHANICAL SYSTEMS, DUCT CONNECTIONS, EXHAUST/OUTSIDE AIR CONNECTIONS, SECURITY, FIRE ALARM, DATA, AND PHONE PRIOR TO SUBMISSION OF THEIR BID.
3. ANY DISCREPANCIES BETWEEN THE CONSTRUCTION DOCUMENTS AND THE CONDITIONS OBSERVED SHALL BE BROUGHT TO THE ATTENTION, IN WRITING, TO THE ARCHITECT AND/OR ENGINEER PRIOR TO PROCEEDING WITH CONSTRUCTION.
4. NO WORK SHALL BE DONE ON ANY PART OF THE BUILDING BEYOND THE POINT INDICATED IN EACH SUCCESSIVE INSPECTION WITHOUT FIRST OBTAINING THE WRITTEN APPROVAL OF THE CODE OFFICIAL. NO CONSTRUCTION SHALL BE CONCEALED WITHOUT BEING INSPECTED AND APPROVED.

VCS architects
19251 Purus Dr.
Porter, TX 77365

CONSULTANTS

SOURCE2LOAD
Source2Load Engineering and Consulting, LLC
"Powering Solutions"
TBPE Firm No. F-15125
9337 Katy Freeway Suite B #282
Houston, Texas 77024
Office: (713) 497-5114
Fax: 281-416-5080
Email: info@source2load.com
www.source2load.com

BATES ALLEN PARK
BLACK COWBOY MUSEUM
630 CHARLIE ROBERTS LANE

STATE OF TEXAS
CHAD X. SLATER, SR.
107439
LICENSED PROFESSIONAL ENGINEER
09/23/24

Drawing Date: 06/03/2024
Drawn By: SMA
Checked By: DDV
Scale: AS NOTED

Revisions:

DESCRIPTION	
ISSUE FOR BID & CONSTRUCTION	09/23/2024

MECHANICAL SPECIFICATIONS

Drawing Name

M.001

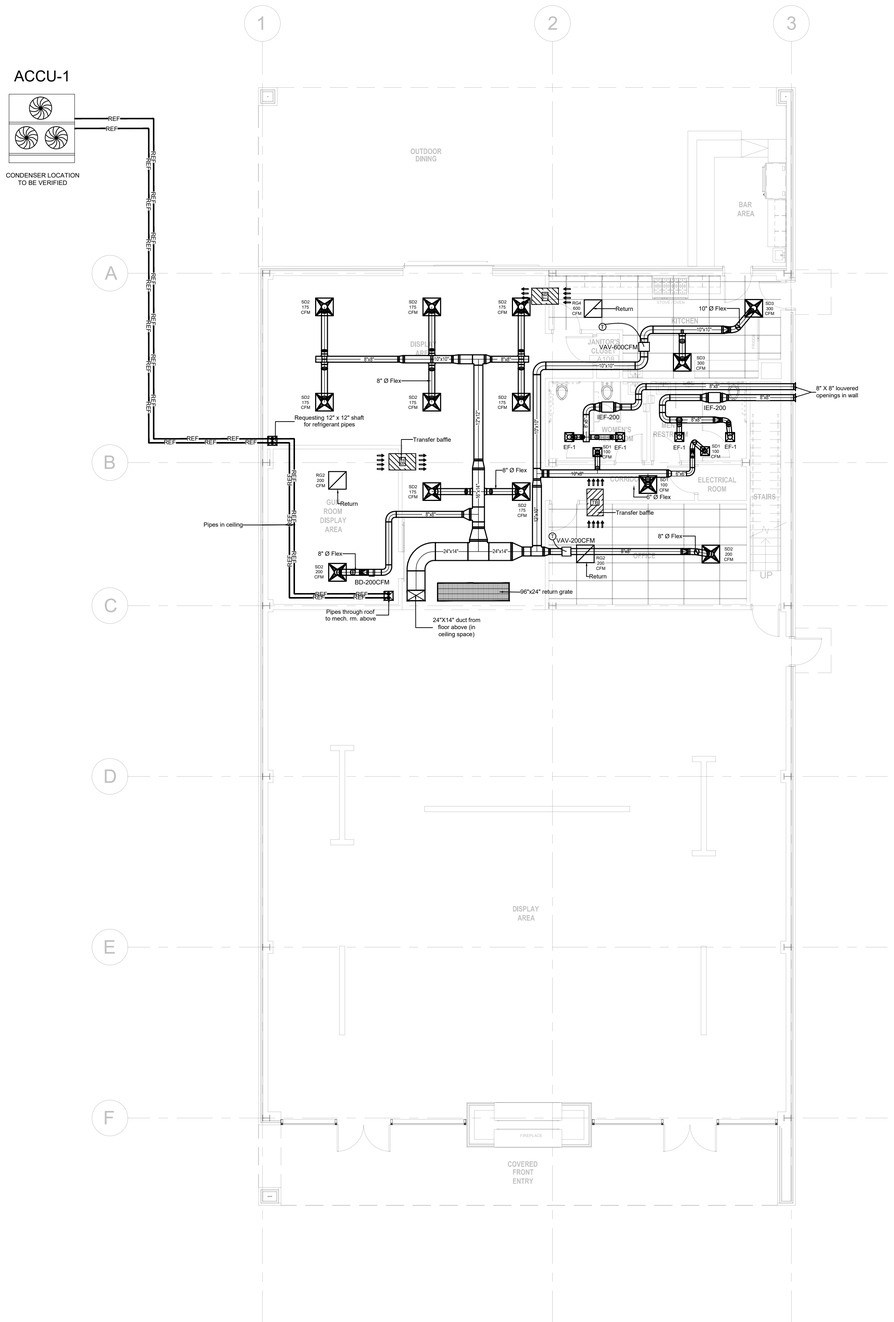

SYMBOL LEGEND	
	Ceiling Diffuser
	Ceiling Return Grille
	Transfer Baffle
T	Thermostat
	Exhaust Fan

AIR DEVICE SCHEDULE

MARK	SERVICE	FLEX SIZE	CFM RANGE
SD1	SUPPLY AIR	6"ø	0–120
SD2	SUPPLY AIR	8"ø	125–220
SD3	SUPPLY AIR	10"ø	225–450
SD4	SUPPLY AIR	12"ø	455–600
RG1	RETURN AIR	6"ø	0–120
RG2	RETURN AIR	8"ø	125–220
RG3	RETURN AIR	10"ø	225–330
RG4	RETURN AIR	12"ø	335–750
RG5	RETURN AIR	14"ø	755–1200
EF–1	EXHAUST AIR	6"ø	0–110

MECHANICAL HVAC 1ST FLOOR PLAN

Scale: 1'/8" = 1'-0"

architects

19251 Purus Dr.
Porter, TX 77365

CONSULTANTS

SOURCE2LOAD
Source2Load Engineering and Consulting, LLC
"Powering Solutions"
TBPE Firm No. F–15125
9337 Katy Freeway Suite B #282
Houston, Texas 77024
Office: (713) 497–5114
Fax: 281–416–5080
Email: info@source2load.com
www.source2load.com

BATES ALLEN PARK
BLACK COWBOY MUSEUM
630 CHARLIE ROBERTS LANE

STATE OF TEXAS
CHAD X. SLATER, SR.
10743
LICENSED PROFESSIONAL ENGINEER

09/23/24

Drawing Date: 06/03/2024
Drawn By: SMA
Checked By: DDV
Scale: AS NOTED

Revisions:

DESCRIPTION	
ISSUE FOR BID & CONSTRUCTION	09/23/2024

HVAC DESIGN
PLAN - LEVEL 01

Drawing Name

M.002

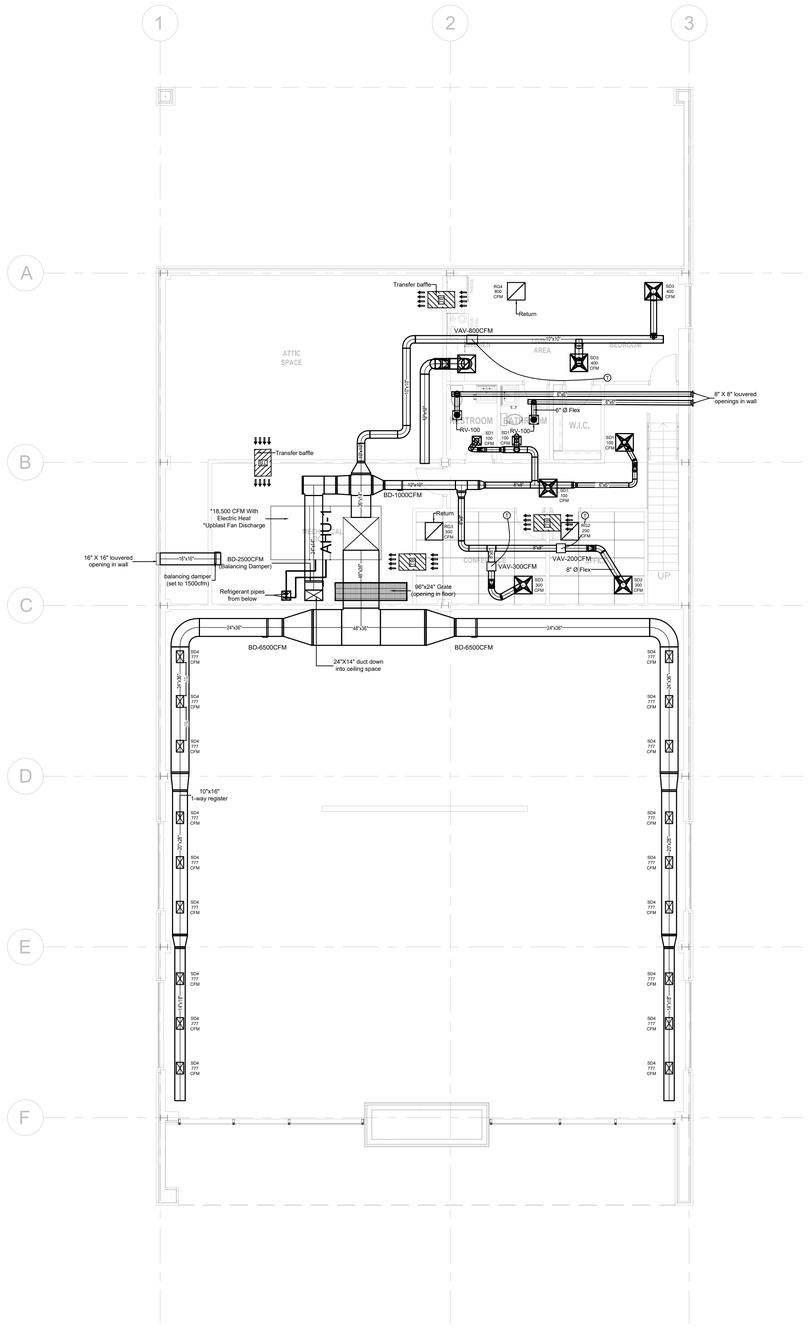

SYMBOL LEGEND	
	Ceiling Diffuser
	Ceiling Return Grille
	Transfer Baffle
T	Thermostat
	Exhaust Fan

AIR DEVICE SCHEDULE

MARK	SERVICE	FLEX SIZE	CFM RANGE
SD1	SUPPLY AIR	6"ø	0–120
SD2	SUPPLY AIR	8"ø	125–220
SD3	SUPPLY AIR	10"ø	225–450
SD4	SUPPLY AIR	12"ø	455–600
RG1	RETURN AIR	6"ø	0–120
RG2	RETURN AIR	8"ø	125–220
RG3	RETURN AIR	10"ø	225–330
RG4	RETURN AIR	12"ø	335–750
RG5	RETURN AIR	14"ø	755–1200
EF–1	EXHAUST AIR	6"ø	0–110

MECHANICAL HVAC 2ND FLOOR PLAN

Scale: 1'/8" = 1'-0"

architects

19251 Purus Dr.
Porter, TX 77365

CONSULTANTS

SOURCE2LOAD
Source2Load Engineering and Consulting, LLC
"Powering Solutions"
TBPE Firm No. F–15125
9337 Katy Freeway Suite B #282
Houston, Texas 77024
Office: (713) 497–5114
Fax: 281–416–5080
Email: info@source2load.com
www.source2load.com

BATES ALLEN PARK
BLACK COWBOY MUSEUM
630 CHARLIE ROBERTS LANE

STATE OF TEXAS
CHAD X. SLATER, SR.
107749
LICENSED PROFESSIONAL ENGINEER

09/23/24

Drawing Date: 06/03/2024
Drawn By: SMA
Checked By: DDV
Scale: AS NOTED

Revisions:

DESCRIPTION	
ISSUE FOR BID & CONSTRUCTION	09/23/2024

HVAC DESIGN
PLAN - LEVEL 02

Drawing Name

M.003

AIR HANDLER SCHEDULE

EQUIP. TAG	OUTDOOR EQUIP. TAG	SERVES	MANUFACTURER & MODEL	WEIGHT (LBS)	SUPPLY AIR CFM	OUTSIDE AIR CFM	FLA (MOTOR) @460V	HP	ENTERING AIR TEMP. °F		HEATER (kW)	ELECTRICAL (HEATER)		
									DB	WB	kW	V-Ph-Hz	MCA	MOCP
AHU-1	ACCU-1	1ST FLOOR & 2ND FLOOR	CARRIER AERO 39M-17PD 37T W/FORWARD CURVED FAN OR APPROVED EQUAL	3837	18500	2100	35.2	30.00	80	67	100	480-3-60	150	175

NOTES:
A. PROVIDE WALL MOUNTED 7-DAY PROGRAMMABLE THERMOSTAT WITH 5 DEG F DEADBAND. COOLING AND HEATING CONTROL TO MATCH EQUIPMENT.
B. TEMPERATURE CONTROLS HAVE SETPOINT OVERLAP RESTRICTIONS
C, SETBACK TO 55 DEG F (HEAT) AND 85 DEG F (COOL): 7-DAY CLOCK, 2-HOUR OVERRIDE, 10-HOUR BACKUP
D. PROVIDE CO2 SENSOR AND ECONOMIZER WITH BAROMETRIC RELIEF
E. RETURN AIR SMOKE DETECTOR FOR UNITS OVER 2000 CFM
F. ECONOMIZER OPERATES AUTOMATICALLY TO REDUCE OUTDOOR AIR INTAKE.
G. PROVIDE FLOAT SWITCH IN SECONDARY DRAIN PAN FOR EMERGENCY SHUT-DOWN.
H. PROVIDE ZONE CONTROL TO AHU-1,

CONDENSING UNIT SCHEDULE

EQUIP. TAG	SERVES	MANUFACTURER & MODEL	NOMINAL TONNAGE	SEER /EER/ IEER	REFRIGERATION			COMPRESSOR(S)		CONDENSER FAN(S)		ELECTRICAL DATA		
					AMBIENT TEMP(F)	TYPE	# OF CIRCUITS	QTY	RLA	QTY	FLA	V-Ph-Hz	MCA	MOCP
ACCU-1	AHU-1	CARRIER 38APS 040 OR APPROVED EQUAL	40.0	-/ 11.5/12.0	95°F	R-410A	1	3	23.1	3	3.3	460-3-60	85	100

NOTES:
A. PROVIDE MOUNTING PAD FOR EACH UNIT. COORDINATE WITH ARCHITECT/OWNER.
B. PROVIDE WALL MOUNTED NON-FUSED DISCONNECT.
C. PROVIDE REFRIGERANT GAS & LIQUID LINE AS REQUIRED BY MANUFACTURER.

EXHAUST FAN SCHEDULE

MARK	AREA SERVED	MANUFACTURER & MODEL	CFM RANGE	STATIC "W.G.	SONES	DRIVE TYPE	MOUNTING	ELECTRICAL			REMARKS
								V-Ph-Hz	HP	AMPS	
IEF-200	RESTROOM	VENTS-US TT150 OR ACCEPTABLE MANUFACTURER	200	0.30"	3.5	DIRECT	CEILING	120-1-60	1/3	0.5	1
RV-100	RESTROOM	BROAN AEN110 OR ACCEPTABLE MANUFACTURER	110	0.30"	1.0	DIRECT	CEILING	120-1-60	1/3	0.3	1

REMARKS:
1. CONTROLLED AS PER ELECTRICAL DRAWINGS

HVAC AIR BALANCE

UNIT	HVAC SUPPLY DESIGN	HVAC RETURN DESIGN	HVAC OUTDOOR DESIGN	HOOD MAKE-UP DESIGN	HOOD EXHAUST DESIGN	GENERAL DESIGN	AREA SERVED
AHU-1	18500	18500	2100				ALL
IEF-200						200	RESTROOM
IEF-200						200	RESTROOM
RV-100						100	RESTROOM
RV-100						100	RESTROOM
TOTAL	5000	5000	+2100			-600	
OA	-	-	+2100	-	-	-600	
						+1500	BUILDING PRESSURE

BLACK COWBOY MUSEUM OUTSIDE AIR CALCULATIONS (CFM)

ROOM NAME	SPACE TYPE	AC UNIT	AREA Az (sq.ft.)	Zone Population Pz	Default Occupant Density (People/1000 ft2)	PEOPLE OUTDOOR Air Rate RP (cfm/person)	AREA OUTDOORAir Rate RA (cfm/ft2)	Occupant OA Requirements Rp*Pz (CFM)	Area OA Requirements Ra*Az (CFM)	Breathing Zone OA(CFM) Requirements Vbz= (RpPz + RaAz) /Ez (CFM)	Zone Air Distribution Effectiveness Ez
DISPLAY AREA	Museums/galleries	AHU-1	4409	176.00	40.00	7.50	0.10	1320.00	440.90	1760.90	1
KITCHEN (1ST FL)	Kitchen (cooking)i	AHU-1	246	5.00	20.00	7.50	0.12	37.50	29.52	67.02	1
RESTROOMS (1ST FL)	Corridors	AHU-1	195	0.00	-	0.00	0.06	0.00	11.70	11.70	1
OFFICE (1ST FL)	Office space	AHU-1	247	4.00	5.00	5.00	0.06	20.00	14.82	34.82	1
CORRIDOR (1ST FL)	Corridors	AHU-1	64	0.00	-	0.00	0.06	0.00	3.84	3.84	1
KITCHEN (2ND FL)	Kitchen (cooking)i	AHU-1	315	5.00	20.00	7.50	0.12	37.50	37.80	75.30	1
RESTROOMS (2ND FL)	Corridors	AHU-1	96	0.00	-	0.00	0.06	0.00	5.76	5.76	1
OFFICE (2ND FL)	Office space	AHU-1	109	2.00	5.00	5.00	0.06	10.00	6.54	16.54	1
CONFERENCE ROOM	Conference/meeting	AHU-1	149	8.00	50.00	5.00	0.06	40.00	8.94	48.94	1
CORRIDOR (2ND FL)	Corridors	AHU-1	165	0.00	-	0.00	0.06	0.00	9.90	9.90	1
									TOTAL CFM	2034.72	
										TOTAL SUPPLY	2034.72

architects
19251 Purus Dr.
Porter, TX 77365

CONSULTANTS
SOURCE2LOAD
Source2Load Engineering and Consulting, LLC
"Powering Solutions"
TBPE Firm No. F-15125
9337 Katy Freeway Suite B #282
Houston, Texas 77024
Office: (713) 497-5114
Fax: 281-416-5080
Email: info@source2load.com
www.source2load.com

BATES ALLEN PARK
BLACK COWBOY MUSEUM
630 CHARLIE ROBERTS LANE

STATE OF TEXAS
CHAD X. SLATER, SR.
107749
LICENSED PROFESSIONAL ENGINEER
09/23/24

Drawing Date: 06/03/2024
Drawn By: SMA
Checked By: DDV
Scale: AS NOTED

Revisions:

DESCRIPTION	
ISSUE FOR BID & CONSTRUCTION	09/23/2024

MECHANICAL AND VENTILATION SCHEDULES

Drawing Name

M.004

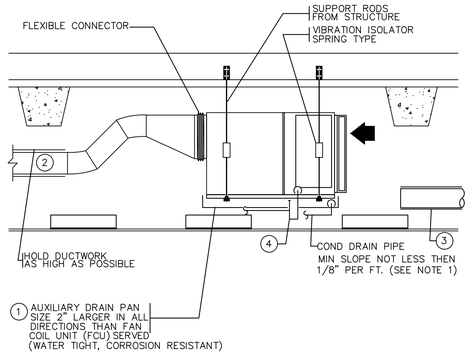

KEYED NOTES:

1. ROUTE CONDENSATE DRAIN LINES TO APPROVED PLUMBING FIXTURE.
2. DUCT MOUNTED SMOKE DETECTOR.
3. DUCTWORK INSULATION.
4. INSULATED & TRAPPED CONDENATE PRIMARY DRAIN LINE TO EXTERIOR.

SUSPENDED AHU — NOT TO SCALE — 1

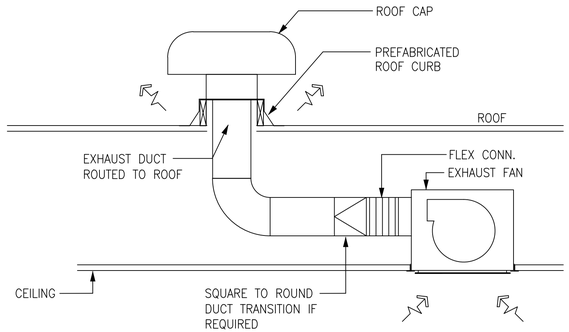

CEILING EXHAUST FAN — NOT TO SCALE — 2

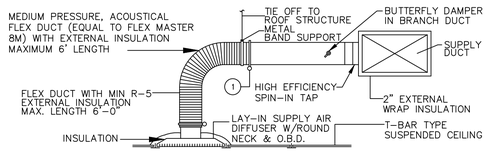

SUPPLY AIR DIFFUSER CONNECTION — NOT TO SCALE — 3

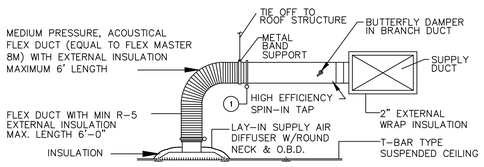

RETURN AIR GRILLE BOX CONNECTION — NOT TO SCALE — 5

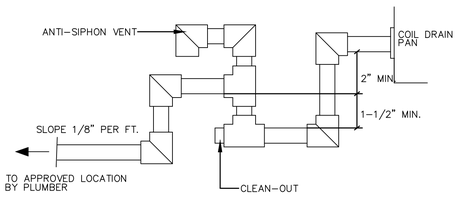

NOTE:
DRAIN LINE TO BE 3/4"ø MIN. (I.D.) COPPER OR MATERIAL APPROVED BY THE BUILDING OFFICIAL

CONDENSATE DRAIN PIPING — NOT TO SCALE — 6

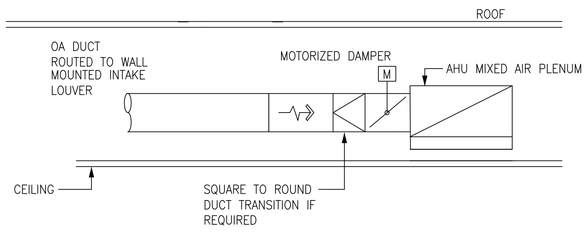

OUTSIDE AIR CONNECTION — NOT TO SCALE — 7

architects

19251 Purus Dr.
Porter, TX 77365

CONSULTANTS

SOURCE2LOAD
Source2Load Engineering and Consulting, LLC
"Powering Solutions"
TBPE Firm No. F-15125
9337 Katy Freeway Suite B #282
Houston, Texas 77024
Office: (713) 497-5114
Fax: 281-416-5080
Email: info@source2load.com
www.source2load.com

BATES ALLEN PARK
BLACK COWBOY MUSEUM
630 CHARLIE ROBERTS LANE

STATE OF TEXAS
CHAD X. SLATER, SR.
107419
LICENSED PROFESSIONAL ENGINEER

09/23/24

Drawing Date: 06/03/2024
Drawn By: SMA
Checked By: DDV
Scale: AS NOTED

Revisions:

DESCRIPTION	
ISSUE FOR BID & CONSTRUCTION	09/23/2024

MECHANICAL DETAILS

Drawing Name

M.005.1

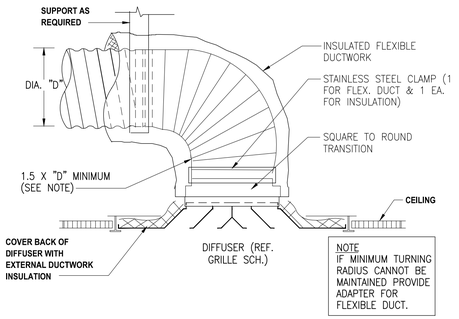

6 FLEX DUCT CONNECTION AT SUPPLY AIR DIFFUSER

SCALE: NONE

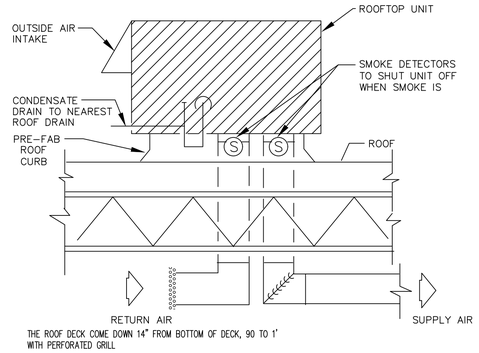

THE ROOF DECK COME DOWN 14" FROM BOTTOM OF DECK, 90 TO 1" WITH PERFORATED GRILL

14 ROOFTOP UNIT

NOT TO SCALE

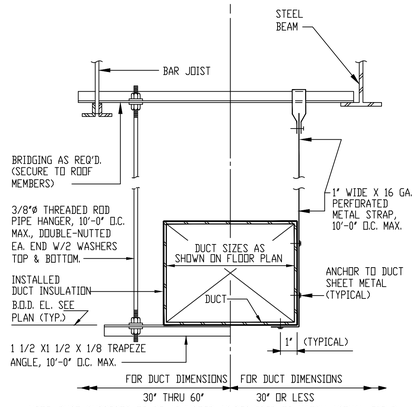

NOTE: DUCT SUPPORTS TO BE ADJUSTED AS REQUIRED TO MATCH ACTUAL FIELD CONDITIONS.
FOR DUCT DIMENSIONS LARGER THAN 60" SEE INSTALLATION SPECIFICATION.

DUCT HANGER DETAIL — N.T.S. — 3 / 6586

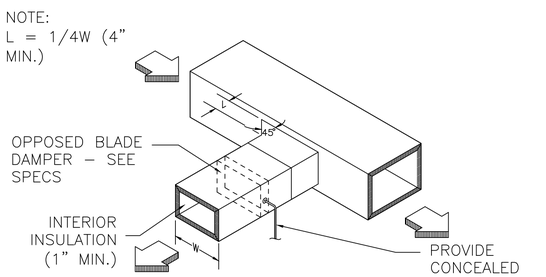

BRANCH DUCT TAKE-OFF NO SCALE **04**

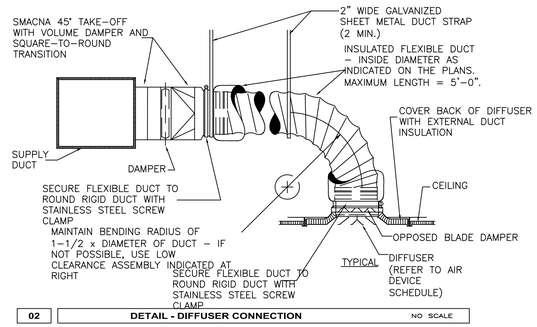

02 **DETAIL - DIFFUSER CONNECTION** NO SCALE

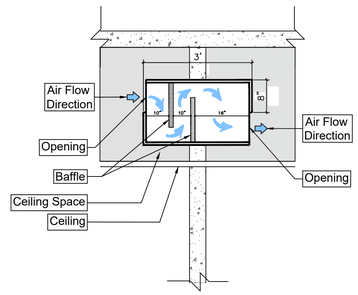

Transfer Baffle Detail

Cross-Sectional View

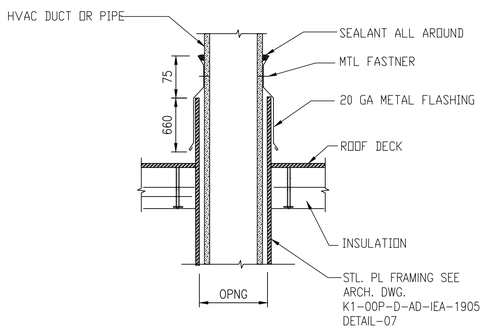

DUCT OR PIPE THRU ROOF — N.T.S.

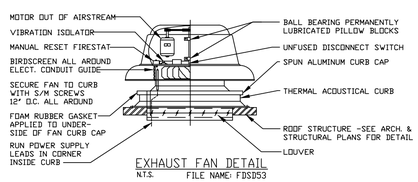

EXHAUST FAN DETAIL — N.T.S. — FILE NAME: FDS053

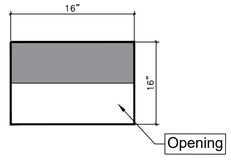

Transfer Baffle Detail

Front View

architects

19251 Purus Dr.
Porter, TX 77365

CONSULTANTS

SOURCE2LOAD
Source2Load Engineering and Consulting, LLC
"Powering Solutions"
TBPE Firm No. F-15125
9337 Katy Freeway Suite B #282
Houston, Texas 77024
Office: (713) 497-5114
Fax: 281-416-5080
Email: info@source2load.com
www.source2load.com

BATES ALLEN PARK
BLACK COWBOY MUSEUM
630 CHARLIE ROBERTS LANE

STATE OF TEXAS — CHAD X. SLATER, SR. — 107743 — LICENSED PROFESSIONAL ENGINEER

09/23/24

Drawing Date: 06/03/2024
Drawn By: SMA
Checked By: DDV
Scale: AS NOTED

Revisions:

DESCRIPTION	
ISSUE FOR BID & CONSTRUCTION	09/23/24

MECHANICAL DETAILS

Drawing Name

M.005

Dimensions (cont)

38AP040-060 UNITS, GREENSPEED

NOTES:
1. BE SURE TO USE A WET RAG AND REMOVE ALL VALVE CORES BEFORE BRAZING FIELD PIPING.
2. TEMPERATURE RELIEF DEVICES LOCATED ON LIQUID LINE AND HAVE A 3/8" SAE FLARE CONNECTION. DO NOT CAP OR OTHERWISE OBSTRUCT THE TEMPERATURE/PRESSURE RELIEF.
3. Ø7/8 [22.4] PILOT HOLE PROVIDED FOR LOCATING FIELD POWER WIRING. ACTUAL HOLE REQUIRED DEPENDS ON FIELD WIRE SIZING.
4. Ø0.437 [11.10] HOLE USED FOR MOUNTING UNIT.
5. UNIT MUST HAVE CLEARANCES AS FOLLOWS: TOP - DO NOT RESTRICT. COIL END - 42 [1067] FROM SOLID SURFACE. PANEL SIDE - 48 [1219] PER NEC.
6. SEE TABLE COLUMN H; DIMENSION FOR STANDARD AND LOW SOUND WITH STACK FAN OPTION.
7. CARRIER DOES NOT RECOMMEND INSTALLATION IN A PIT.
8. UNIT CAN BE HANDLED USING THE FORK TRUCK LIFT POCKETS.
9. DIMENSIONS ARE IN INCHES, DIMENSIONS SHOWN IN [ ] ARE IN MILLIMETERS.
10. SIZES 040 AND 050 UNITS HAVE 3 CONDENSER FANS,SIZE 060 UNITS HAVE 4 CONDENSER FANS.
11. WEIGHT DOES NOT INCLUDE REFRIGERANT CHANGE.
12. FOR 38APS PIPING,REFER TO "CIRCUIT A LIQUID CONNECTION" AND "CIRCUIT A SUCTION CONNECTION" DIMENSIONS SHOWN.

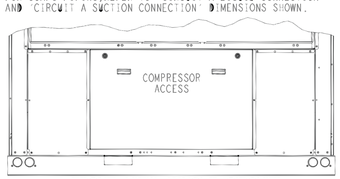

FRONT VIEW (SINGLE CIRCUIT)

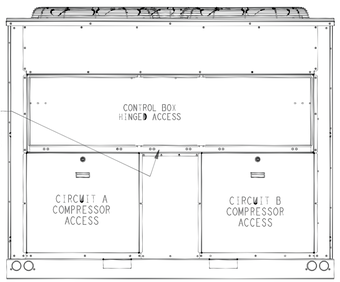

FRONT VIEW (DUAL CIRCUIT)

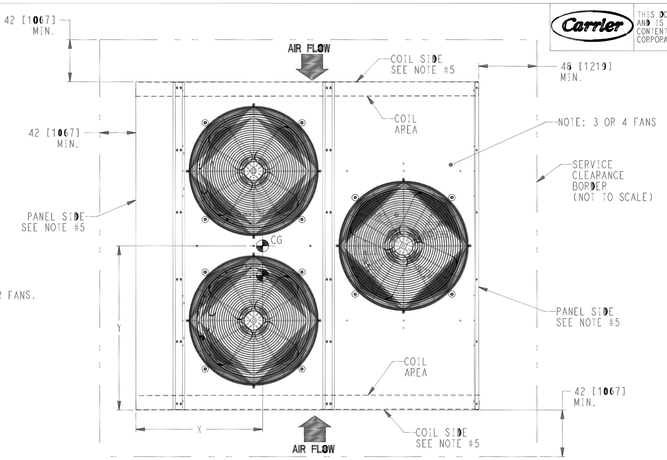

TOP VIEW

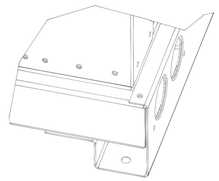

DETAIL A

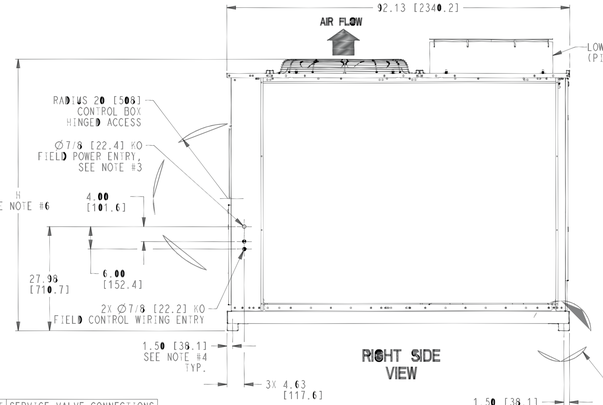

RIGHT SIDE VIEW

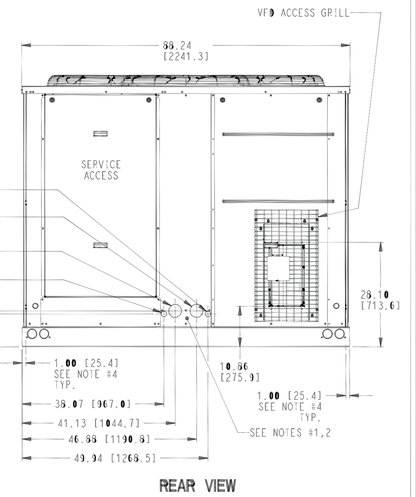

REAR VIEW

	UNIT	STD. UNIT WEIGHT		CENTER OF GRAVITY		UNIT HEIGHT	SERVICE VALVE CONNECTIONS	
		LBS.	KG.	X	Y	H	SUCTION	LIQUID
GREENSPEED	38APS040	1965	893	35.0 [889]	44.0 [1116]	73.0 [1854]	2-1/8 [54]	7/8 [22]
	38APD040	2094	950	33.7 [856]	44.1 [1120]		1-5/8 [41]	5/8 [16]
	38APS050	1977	897	34.9 [886]	44.0 [1116]		2-1/8 [54]	7/8 [22]
	38APD050	2120	961	33.4 [848]	44.1 [1120]		1-5/8 [41]	5/8 [16]
	38APD060	2227	1010	34.4 [874]	44.1 [1120]		1-5/8 [41]	5/8 [16]

Carrier | THIS DOCUMENT IS THE PROPERTY OF CARRIER CORPORATION AND IS DELIVERED UPON THE EXPRESS CONDITION THAT THE CONTENTS WILL NOT BE DISCLOSED OR USED WITHOUT CARRIER CORPORATION'S WRITTEN CONSENT. | SUBMISSION OF THESE DRAWINGS OR DOCUMENTS DOES NOT CONSTITUTE PART PERFORMANCE OR ACCEPTANCE OF CONTRACT.

ITC CLASSIFICATION	SHEET	DATE	SUPERCEDES REV'D	38AP040-060 / GREENSPEED OPTION	38AP555556	REV
U.S. ECCN:EAR99	2 OF 2	12/14/21	02/26/19			J

VCS architects
19251 Purus Dr.
Porter, TX 77365

CONSULTANTS
SOURCE2LOAD
Source2Load Engineering and Consulting, LLC
"Powering Solutions"
TBPE Firm No. F-15125
9337 Katy Freeway Suite B #282
Houston, Texas 77024
Office: (713) 497-5114
Fax: 281-416-5080
Email: info@source2load.com
www.source2load.com

BATES ALLEN PARK
BLACK COWBOY MUSEUM
630 CHARLIE ROBERTS LANE

STATE OF TEXAS
CHAD X. SLATER, SR.
107743
LICENSED PROFESSIONAL ENGINEER
09/23/24

Drawing Date: 06/03/2024
Drawn By: SMA
Checked By: DDV
Scale: AS NOTED

Revisions:

DESCRIPTION	
ISSUE FOR BID & CONSTRUCTION	09/23/2024

ACCU-1 DETAILS

Drawing Name

M.006

Dimensions (cont)

SIZE 37T (18,500 cfm)

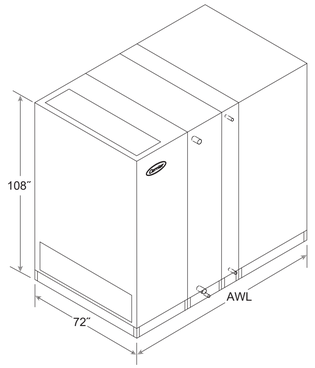

NOTES:
1. Dimensions are shown for indoor units. For outdoor units add 4 in. to height and 3 in. to width.
2. Height dimensions include 6-in. base rail.

AIR DISTRIBUTION COMPONENTS	AWL (in.)	Weight (lb)	DAMPER QUANTITY
Mixing Box	45	461	2
Side Inlet Mixing Box	39	613	3
Filter Mixing Box (2-in. or 4-in. Flat Filter)	52	932	2
Filter Mixing Box (6-in. Flat Filter)	54	954	2
Filter Mixing Box (Angle Filter)	50	910	2
Filter Mixing Box (Bag Cartridge Filter)	65	1073	2
Air Mixer	36	648	N/A
Exhaust Box	45	523	2
Side Outlet Exhaust Box	39	623	3
Combination Exhaust Mixing Box	39	508	3
Internal Face and Bypass Damper	18	302	2
External Face and Bypass Damper Section		Future offering	
Multizone Damper (Front Discharge) (Two Deck)		Future offering	
Multizone Damper (Top Discharge) (Two Deck)		Future offering	

FILTRATION COMPONENTS	AWL (in.)	Weight (lb)	FILTER QUANTITY	FILTER SIZE (in.)	FILTER AREA (ft2)
2-in. or 4-in. Flat Filter	12	577	9 / 3	24 x 20 / 20 x 20	38.3
2-in. Pre-Filter with 4-in. Flat Filter	14	591	9 / 3	24 x 20 / 20 x 20	38.3
2-in. or 4-in. Angle Filter	27	663	24	20 x 16	53.3
Short Bag/Side Loading Cartridge Filter	24	671	6 / 5	24 x 24 / 12 x 24	34.0
Long Bag/Side Loading Cartridge Filter	42	791	6 / 5	24 x 24 / 12 x 24	34.0
Bag/Front Loading Cartridge Filter	48	831	8 / 4	24 x 24 / 12 x 24	40.0
Blow-thru Front Loading HEPA Filter	48	831	6 / 5	24 x 24 / 12 x 24	34.0

HEAT TRANSFER SECTIONS	MIN AWL (in.)	MIN Weight (lb)	MAX AWL (in.)	MAX Weight (lb)
Coil and Variable Length Plenum (with Drain Pan)	24	344	61	647
Coil and Variable Length Plenum (without Drain Pan)	12	262	60	608
Dual Coil and Variable Length Plenum (with Drain Pan)	30	344	61	647
Vertical Coil		Future offering		
Multizone Front Discharge		Future offering		
Multizone Top Discharge		Future offering		
Internal Face and Bypass Cooling Coil	24	344	N/A	N/A
Internal Face and Bypass Heating Coil	12	262	24	342
Integral Face and Bypass Heating Coil	48	635	N/A	N/A
Electric Heat with Control Box (Low Amp [min]/High Amp [max])	30	692	42	711
Gas Heat (Low BTU [min]/High BTU [max])		Future offering		

AIR MOVEMENT SECTIONS*	MIN AWL (in.)†	MIN Weight (lb)†	MAX AWL (in.)**	MAX Weight (lb)**
Airfoil Fan	77	1954	79	1994
Downblast Airfoil Fan	84	1946	87	2096
Forward Curved Fan	59	1969	71	2008
Belt-Drive Plenum Fan		Future offering		
Direct Drive Plenum Fan	62	1525	72	1911
Fan Array		Future offering		
Vertical Forward Curve Fan		Future offering		
Vertical Airfoil Fan		Future offering		
Horizontal Direct Drive Plenum Fan with EC Motor	Variable depending upon fan size, quantity, and options. See AHUBuilder.			

MISCELLANEOUS SECTIONS	MIN AWL (in.)	MIN Weight (lb)	MAX AWL (in.)	MAX Weight (lb)
ERV Section		Future offering		
Humidifier	24	687 48 861		
Access and Plenum	12	687	48	521
Turning Plenum	33	490	N/A	N/A

LEGEND
AWL — Airway Length
ERV — Energy Recovery Ventilator
N/A — Not Applicable

* Refer to AHUBuilder® program for application specific weight and AWL.
† Minimum is based on smallest motor and smallest fan wheel combination.
** Maximum is based on largest motor and largest fan wheel combination.

VCS architects
19251 Purus Dr.
Porter, TX 77365

CONSULTANTS

SOURCE2LOAD
Source2Load Engineering and Consulting, LLC
"Powering Solutions"
TBPE Firm No. F-15125
9337 Katy Freeway Suite B #282
Houston, Texas 77024
Office: (713) 497-5114
Fax: 281-416-5080
Email: info@source2load.com
www.source2load.com

BATES ALLEN PARK
BLACK COWBOY MUSEUM
630 CHARLIE ROBERTS LANE

STATE OF TEXAS
CHAD X. SLATER, SR.
107438
LICENSED PROFESSIONAL ENGINEER

09/23/24

Drawing Date: 06/03/2024
Drawn By: SMA
Checked By: DDV
Scale: AS NOTED

Revisions:

DESCRIPTION	
ISSUE FOR BID & CONSTRUCTION	09/23/2024

AHU-1 DETAILS

Drawing Name

M.007

ELECTRICAL SPECIFICATIONS

THE WORK INCLUDES PROVIDING NEW MATERIALS, FIXTURES, DEVICES AND ACCESSORIES NECESSARY FOR A COMPLETE FUNCTIONING ELECTRICAL SYSTEM. ALL WORK SHALL BE IN ACCORDANCE WITH LOCAL CODES OR ORDINANCES AND SUBJECT TO INSPECTION.

COMPLY WITH ALL LAWS APPLYING TO ELECTRICAL INSTALLATIONS IN EFFECT, AND WITH THE MOST RECENT EDITION OF THE NATIONAL ELECTRICAL CODE, ADA, APPLICABLE SECTIONS OF OTHER NFPA, OSHA, LIFE SAFETY CODES AND RECOMMENDATIONS, AND THE INTERIM AMENDMENTS IN EFFECT AT THE TIME OF THE PROPOSAL. ALL MATERIALS USED SHALL BE NEW AND SHALL CONFORM TO THE STANDARDS ESTABLISHED BY THE UNDERWRITERS LABORATORIES INCORPORATED.

WARRANTY: PROVIDE LABOR AND MATERIALS TO REPAIR OR REPLACE DEFECTIVE PARTS AND MATERIALS AS REQUIRED FOR ONE YEAR AFTER SUBSTANTIAL COMPLETION OR OWNER ACCEPTANCE OF THE COMPLETED PROJECT. PROVIDE A SEPARATE LINE ITEM DEDUCT AMOUNT ON THE PROPOSAL FORM TO DELETE WARRANTY SERVICE, AT THE OWNER'S OPTION.

THE INTENT OF THE DRAWINGS IS TO INDICATE THE GENERAL EXTENT OF WORK REQUIRED FOR THE PROJECT. THE DRAWINGS FOR ELECTRICAL WORK ARE DIAGRAMMATIC, SHOWING THE LOCATIONS, TYPE, DEVICES AND EQUIPMENT REQUIRED. THE DRAWINGS SHALL NOT BE SCALED FOR EXACT MEASUREMENTS. PROVIDE ALL FIXTURES, DEVICES, ACCESSORIES, OFFSETS, AND MATERIALS NECESSARY TO FACILITATE THE SYSTEM'S FUNCTIONING AS INDICATED BY THE DESIGN AND THE EQUIPMENT FURNISHED BY OTHERS.

ELECTRICAL DESIGN FOR THIS INSTALLATION IS BASED ON FIELD INSPECTIONS AND PREVIOUS DESIGN DRAWINGS FOR THE EXISTING BUILDING. ELECTRICAL CONTRACTOR IS TO FIELD VERIFY EXISTING CONDITIONS PRIOR TO BIDDING. ALLOWANCES ARE TO BE INCLUDED FOR UNFORESEEN EXISTING CONDITIONS THAT MAY EFFECT THE CONTRACTOR'S SCOPE OF WORK. MINOR DEVIATIONS REQUIRED FOR ACCOMPLISHING THE INTENT OF THIS DESIGN IS TO BE INCLUDED IN THIS ALLOWANCE.

ELECTRICAL CONTRACTOR TO FIELD VERIFY ALL EXISTING UTILITIES. ANY ITEM DAMAGED BY THIS CONTRACTOR IS TO BE REPAIRED IMMEDIATELY AND AT NO COST TO THE OWNER.

ELECTRICAL CONTRACTOR TO FIELD VERIFY ALL EXISTING EQUIPMENT AS SHOWN ON DESIGN DRAWINGS AND ARE IN GOOD WORKING CONDITION PRIOR TO RE-USING. IF EXISTING CONDITIONS ARE NOT AS SHOWN OR ARE NOT IN GOOD WORKING CONDITION, CONTRACTOR SHALL PROVIDE EQUIPMENT, CONDUIT, AND/OR WIRE AS INDICATED TO PROVIDE A "LIKE-NEW" AND CODE COMPLIANT INSTALLATION. CONTRACTOR IS RESPONSIBLE FOR RELOCATING ANY EXISTING ITEMS BEING REUSED. ANY EXISTING EQUIPMENT, CONDUIT OR WIRE NOT BEING REUSED SHALL BE REMOVED BY THIS CONTRACTOR.

ELECTRICAL DESIGN HAS BEEN BASED ON THE INSTALLATION OF 75°C CONDUCTORS CONNECTED TO TERMINAL LUGS AND EQUIPMENT, U.L. LISTED FOR A MINIMUM 75°C. CONDUCTORS TERMINATED ON EQUIPMENT OR DEVICES WITH A LOWER RATING (60°C) OR NO RATING SHOWN, SHALL HAVE CONDUCTOR SIZE INCREASED TO CONFORM TO NEC TABLE 310-16 AND U.L. NO. 489 REQUIREMENTS.

DISCONNECT SWITCHES SHALL BE HEAVY-DUTY, QUICK-MAKE, QUICK-BREAK TYPE, NEMA 1 ENCLOSURE FOR INDOOR LOCATIONS (NEMA 3R FOR OUTDOOR LOCATIONS). SWITCHES SHALL BE AS MANUFACTURED BY SQUARE 'D', GENERAL ELECTRIC, OR SIEMEN'S (I.T.E.). PROVIDE FUSES AS MANUFACTURED BY BUSSMAN, GOULD-SHAWMUT, OR LITTLE-FUSE. ALL CONDUCTOR TERMINALS TO BE U.L. LISTED FOR A MINIMUM OF 75°C. SWITCHES USED AS SERVICE ENTRANCE EQUIPMENT TO BE U.L. LISTED AS "SER" RATED EQUIPMENT.

PANEL BOARDS SHALL BE AS MANUFACTURED BY GENERAL ELECTRIC MEETING U.L. STANDARDS 50 AND 67, WITH U.L. LABEL. PANELS USED AS SERVICE ENTRANCE EQUIPMENT TO BE U.L. LISTED AS "SER" RATED EQUIPMENT.

BREAKERS: THERMAL MAGNETIC TYPE, QUICK-MAKE, QUICK-BREAK, PLUG-IN TYPE OF SINGLE UNIT CONSTRUCTION. TWO POLE BREAKERS SHALL BE SINGLE UNIT COMMON TRIP TYPE. BREAKERS USED AS SWITCHES FOR 120V LIGHTING CIRCUITS SHALL BE APPROVED FOR THAT USE AND MARKED "SWD". ALL BREAKERS FOR HVAC AND REFRIGERATION EQUIPMENT SHALL BE "HACR" RATED BREAKERS.

GROUNDING SYSTEM: PERMANENTLY AND EFFECTIVELY GROUND ALL METALLIC CONDUIT, SUPPORTS, CABINETS, PANELBOARDS AND SYSTEM NEUTRAL CONDUCTORS. MAINTAIN CONTINUITY OF EQUIPMENT GROUND THROUGHOUT THE SYSTEM. GROUND CLAMPS SHALL BE APPROVED TYPE, SPECIFICALLY DESIGNED FOR GROUNDING. WHERE GROUNDING CONDUCTOR IS ENCLOSED IN CONDUIT, GROUND CLAMP SHALL BE OF A TYPE WHICH GROUNDS BOTH CONDUCTOR AND CONDUIT. ALL CIRCUITS IN FLEXIBLE METAL OR PLASTIC CONDUIT SHALL INCLUDE A GROUND WIRE SIZED IN ACCORDANCE WITH NATIONAL ELECTRICAL CODE.

CONDUIT SHALL BE SIZED TO COMPLY WITH NEC FOR NUMBER AND SIZE OF CONDUCTORS INSTALLED, MINIMUM 24" BELOW GRADE. PROVIDE SCHEDULE 40 PVC PLASTIC OR RIGID STEEL CONDUIT BELOW GRADE, MINIMUM 3/4". PROVIDE ELECTRICAL METAL TUBING (EMT) MEETING FS W-C563, FLEXIBLE METAL CONDUIT (IN LENGTHS 6' OR LESS) FOR INTERIOR LOCATIONS. EMT CONNECTORS AND COUPLING SHALL BE SET-SCREW TYPE. CLAMP CONDUIT TO BOXES WITH BUSHING INSIDE AND LOCKNUT OUTSIDE. "MC" & "AC" TYPE CABLES MUST BE INSTALLED IN ACCORDANCE WITH N.E.C. AND CAN NOT BE SUPPORTED FROM CEILING SUPPORT WIRES.

ALL CONDUIT AND RACEWAY SYSTEMS TO BE INSTALLED WITH SEPARATE GROUND CONDUCTOR. CONDUIT SYSTEM IS NOT TO BE USED AS THE SOLE GROUNDING MEANS.

CONDUCTORS: INSULATED SOFT ANNEALED 98% PURE COPPER WITH COLOR CODING, B AND S GAGE, #10 AND SMALLER TO BE SOLID, #8 AND LARGER TO BE STRANDED, MINIMUM #12 UNLESS OTHERWISE INDICATED. ALUMINUM CONDUCTOR WILL BE ALLOWED. CONDUCTORS MUST BE INSTALLED IN ACCORDANCE WITH N.E.C. AND CANNOT BE SUPPORTED FROM CEILING SUPPORT WIRES.THHN MAY NOT BE USED UNDERGROUND, AT SERVICE ENTRANCE, OUTSIDE, OR IN WET LOCATIONS. ALL INSULATION TO BE RATED FOR 600 V AND TYPES AS FOLLOWS:

#10 AND SMALLER:	THWN OR THHN
#8 TO #4/0:	THWN OR THHN
SERVICE ENTRANCE:	USE-RHW
OVER #4/0 ORDINARY SERVICE:	THHN OR XHHN
OVER #4/0 WET OR HOT SERVICE:	XHHW
WIRE THRU FLUORESCENT FIXTURES OR WITHIN 3' OF HTG EQUIP.:	THHN

DEVICES SHALL BE MANUFACTURED BY LEVITON "INDUSTRIAL SPECIFICATION GRADE" OR EQUAL. ALL DEVICES AND COVER PLATES SHALL BE IVORY COLOR. STANDARD DUPLEX RECEPTACLES SHALL BE GROUNDING TYPE, 20A, NEMA WD-2 STANDARD 5-20R, SIDE WIRED, LEVITON #5342. LIGHT SWITCHES SHALL BE 20 AMP, 120 VOLT, LEVITON #1221-2. WHERE SWITCHES ARE GROUPED, PROVIDE GANG PLATES.

SPECIAL PLATES: PROVIDE STAINLESS STEEL PLATES AT ALL RECEPTACLES AND LIGHT SWITCHES INSTALLED IN THE KITCHEN, WORK AREA & STORAGE ROOMS.

LIGHT FIXTURES & LAMPS ARE FURNISHED BY OWNER EXCEPT AS NOTED ON THE LIGHT FIXTURE SCHEDULE. FIXTURE INSTALLATION SHALL BE BY THE ELECTRICAL CONTRACTOR ACCORDING TO LOCAL CODE AUTHORITY. THE ELECTRICAL CONTRACTOR SHALL REVIEW MATERIALS AT THE TIME OF DELIVERY AND IMMEDIATELY REPORT ANY DAMAGE OR MISSING PIECES.

EMERGENCY LIGHTING SHALL HAVE A MINIMUM OF 90 MIN. BATTERY BACK-UP, OR AS REQUIRED BY LOCAL CODE AUTHORITY.

LAYOUT BRANCH CIRCUIT WIRING AND ARRANGEMENT OF HOME RUNS FOR MAXIMUM ECONOMY AND EFFICIENCY, INCREASE WIRE SIZE IF VOLTAGE DROP EXCEEDS 3% OR 100 FEET OF LENGTH.

CONCEAL WIRING SYSTEM ABOVE SUSPENDED CEILINGS OR IN WALL OR FLOOR CONSTRUCTION WHERE POSSIBLE. INSTALL CONDUITS PARALLEL TO BUILDING LINES, AND TO CLEAR ALL OPENING, DEPRESSIONS, PIPES, DUCTS, STRUCTURE, ETC.

INSTALL CONDUIT CONTINUOUS BETWEEN BOXES AND CABINETS WITH NO MORE THAN FOUR (4) 90 DEGREE BENDS. SECURELY FASTEN IN PLACE WITH STRAPS, HANGERS AND STEEL SUPPORTS AS REQUIRED. DO NOT SUPPORT CONDUIT FROM SUSPENDED CEILING GRID OR SUSPENSION WIRES. REAM CONDUIT ENDS BEFORE INSTALLATION AND THOROUGHLY CLEAN BEFORE INSTALLATION. OPENINGS SHALL BE PLUGGED OR COVERED TO KEEP CONDUIT CLEAN. TERMINALS ON SWITCHES AND OUTLET SHALL NOT BE USED TO "FEED THRU" TO THE NEXT SWITCH OR OUTLET.

ADJUSTING AND TESTING: ALL ELECTRICAL EQUIPMENT SHALL BE ADJUSTED AND TESTED FOR PROPER OPERATION. COMPLETED WIRING SYSTEM SHALL BE FREE FROM SHORT CIRCUITS.

TOUCHUP OR REFINISH DAMAGED SURFACES OF FIXTURES AND EQUIPMENT, EXPOSED TO VIEW.

DATA CABLE TO BE FURNISHED AND INSTALLED BY OWNER.

ELECTRICAL CONTRACTOR IS RESPONSIBLE FOR CUTTING EXISTING CONCRETE FLOOR SLAB. GENERAL CONTRACTOR TO PATCH FLOOR TO MATCH EXISTING.

REFER TO ARCHITECTURAL REFLECTED CEILING PLAN FOR EXACT LOCATION OF LIGHTING FIXTURES AND OTHER CEILING MOUNTED EQUIPMENT.

FOR EQUIPMENT FURNISHED BY OWNER OR OTHER CONTRACTORS; ELECTRICAL CONTRACTOR TO VERIFY EXACT LOAD, TYPE OF CONNECTION AND MOUNTING HEIGHT FOR EACH BOX OR EQUIPMENT ITEM TO BE INSTALLED. ALL HARDWIRED CONNECTIONS TO EQUIPMENT TO BE MADE WITH FLEXIBLE LIQUID-TITE METAL CONDUIT WITH GREEN GROUND CONDUCTOR INSTALLED INSIDE RACEWAY. GROUND CONDUCTOR TO BE BONDED AT BOTH ENDS.

CONTACTORS SHALL BE SQUARE 'D', CLASS 8903, TYPE 'S', 100,000 A.I.C. RATING OR AS SHOWN ON THE PLANS, ELECTRICALLY HELD, DESIGNED FOR TWO-WIRE CONTROL CIRCUIT, FULLY RATED FOR ALL CLASSES OF INDUCTIVE AND NON-INDUCTIVE LOADS, AND RATED FOR CONTINUOUS CAPACITY AND POWER CIRCUIT VOLTAGE NOT LESS THAN INDICATED ON DRAWINGS. PROVIDE WITH NUMBER OF POLES INDICATED OR SPECIFIED. CONTACTORS SHALL BE FURNISHED WITH NEMA 1, SURFACE MOUNTED ENCLOSURES UNLESS CALLED FOR OTHERWISE ON DRAWINGS. EACH CONTACTOR SHALL BE PROVIDED WITH ENGRAVED LAMINATED PLASTIC NAMEPLATE WITH BLACK BACKGROUND AND 1/4" WHITE LETTERS TO DESIGNATE USE OF CONTRACTOR.

MINIMUM WIRE SIZE - 20 AMP BRANCH CIRCUIT SHALL BE AWG LISTED SIZE PER DISTANCE SHOWN BELOW. DISTANCE SHALL BE MEASURED FROM THE PANELBOARD CIRCUIT BREAKER TO THE FURTHEST OUTLET.

A. #12 LESS THAN 100 FEET
B. #10 BETWEEN 100-150 FEET
C. #8 BETWEEN 150 - 250 FEET
D. #6 OVER 250 FEET

ON ALL 20 AMP BRANCH CIRCUITS, CONDUCTORS LARGER THAN #10 AWG SHALL BE REDUCED TO #10 AWG WITHIN 10 FEET OF PANEL BOARD AND DEVICE IN JUNCTION BOXES ON RATED TERMINAL STRIPS.

CONDUCTORS MAY BE STRANDED FOR SIZES #10 AWG AND LARGER. CONDUCTORS SIZE #12 SHALL BE SOLID (NOT STRANDED).

ALUMINUM CONDUCTORS ARE NOT PERMITTED, EXCEPT AT SERVICE ENTRANCE, WHERE REQUIRED BY LANDLORD. CONDUCTOR CONNECTION MUST BE PER MANUFACTURER'S REQUIREMENTS. CONTRACTOR MUST ADVISE GENERAL CONTRACTOR AND L.S.P.'S CONSTRUCTION MANAGER WHEN USED.

ALL WIRING SHALL BE IN CONDUIT WHERE REQUIRED BY APPLICABLE CODE.

THE USE OF SHARED NEUTRALS IS REQUIRED FOR LIGHTING CIRCUITS AND SHALL BE INSTALLED IN ACCORDANCE WITH THE NATIONAL ELECTRICAL CODE AND LOCAL CODES. ALL OTHER EQUIPMENT REQUIRING A NEUTRAL CONDUCTOR SHALL HAVE A DEDICATED FULL SIZE NEUTRAL.

THE USE OF ROMEX (NM) CABLE IS PERMITTED.

WIRE CONNECTORS SHALL BE EQUAL TO "SCOTCH LOCK" FOR #8 AWG WIRE AND SMALLER AND EQUAL TO T & B "LOCKTIGHT" FOR #6 AWG AND LARGER.

ALL WIRING TO BE COLOR-CODED AS FOLLOWS:

120/240 VOLT SYSTEM		277/480V SYSTEM	
NEUTRAL -	WHITE	PHASE A	BROWN
PHASE A OR L1 -	BLACK	PHASE B	ORANGE
PHASE B OR L2 -	RED	PHASE C	YELLOW
PHASE C OR L3 -	BLUE	NEUTRAL	WHITE
GROUND -	GREEN	GROUND	GREEN

ENGRAVED PLASTIC-LAMINATE SIGNS:

GENERAL: PROVIDE ENGRAVING STOCK MELAMINE PLASTIC LAMINATE, COMPLYING WITH FED. SPEC. L-P-387, BLACK LETTERING IN WHITE FIELD, ENGRAVER'S STANDARD LETTER STYLE, 1/2" HIGH LETTERING ON 1-1/2" HIGH SIGN (SINGLE LINE) AND 2" HIGH SIGN (TWO LINES). SECONDARY LETTERING, WHEN REQUIRED, SHALL BE 2/3 TO 3/4 OF PRINCIPAL LETTERING SIZE. SIGNS SHALL BE PUNCHED FOR MECHANICAL FASTENING, EXCEPT WHERE ADHESIVE MOUNTING IS REQUIRED.

TERMINOLOGY: TERMINOLOGY SHALL EXACTLY MATCH CONTRACT DOCUMENTS AND SHALL BE APPROVED BY ENGINEER PRIOR TO FABRICATION.

THICKNESS: 1/16" FOR UNITS UP TO 20 SQUARE INCHES OR 8" LENGTH; 1/8" FOR LARGER UNITS.

FASTENERS: SELF-TAPPING STAINLESS STEEL SCREWS.

ADHESIVES: PLASTIC LAMINATE LABEL MANUFACTURER'S STANDARD PRESSURE SENSITIVE ADHESIVE BACKING.

ROOF PENETRATIONS SHALL COMPLY WITH "SMACNA" AND "NRCA" STANDARDS, AND WITH THE REQUIREMENTS OF THE EXISTING ROOFING WARRANTY, IF APPLICABLE. DO NOT PERFORM ROOFING PENETRATIONS IN A MANNER WHICH WOULD VOID OR OTHERWISE LIMIT THE EXISTING ROOFING WARRANTY.

ELECTRICAL GENERAL NOTES

1. THE INTENT OF THESE PLANS AND SPECIFICATIONS IS TO INCLUDE ALL LABOR, EQUIPMENT, MATERIALS, AND SERVICES NECESSARY TO FURNISH, INSTALL, TEST, AND ADJUST A COMPLETE WORKABLE HEATING, VENTILATION, AND AIR CONDITIONING SYSTEM AS SHOWN, PRESCRIBED, OR REASONABLY IMPLIED BUT NOT LIMITED TO THAT EXPLICITLY INDICATED IN THE CONTRACT DOCUMENTS, BUT NECESSARY FOR THE PROPER EXECUTION AND COMPLETION OF THE INTENT THEREOF.
2. THE ENTIRE INSTALLATION SHALL CONFORM TO THE REQUIRMENTS OF THE APPLICABLE CODES AND REGULATIONS REQUIRED BY AUTHORITIES HAVING JURISDICTION. IN THE EVENT OF CONFLICT BETWEEN SPECIFICATIONS, CODES, AND REGULATIONS, THE MORE RESTRICTIVE SHALL APPLY.
3. DRAWINGS FOR ELECTRICAL WORK ARE DIAGRAMATIC SHOWING THE GENERAL LOCATION, TYPE, LAYOUT, AND EQUIPMENT AND MATERIALS REQUIRED. THE DRAWINGS SHALL NOT BE SCALED FOR EXACT MEASUREMENT, REFER TO ARCHITECTURAL DRAWINGS FOR DIMENSIONS. PROVIDE ALL WIRE, CONDUIT, PANDELBOARDS TRANSFORMERS, FEEDERS, TAPS, OVERCURRENT PROTECTION DEVICES, GROUNDING, MOTOR STARTERS, LAMPS, RECEPTACLES, DISCONNECTS, BOXES, COUPLINGS, BRACKETS, HANGERS, SWITCHES, AND CLAMPS AS REQUIRED FOR A COMPLETE WORKABLE SYSTEM.
4. ALL EQUIPMENT SHALL BE INSTALLED IN STRICT ACCORDANCE WITH THE MANUFACTURER'S RECOMMENDATIONS AND APPROVED LISTING. ALL EQUIPMENT AND COMPONENTS OF THE ELECTRICAL SYSTEM SHALL BE BRACED AND ANCHORED TO RESIST THE LATERAL FORCE REQUIREMENTS OF CHAPTER 16 OF THE 2006 INTERNATIONAL BUILDING DCODE.
5. COORDINATE THE INSTALLATION OF THE ELECTRICAL SYSTEM WITH ALL OTHER TRADES PRIOR TO FABRICATION OR INSTALLATION. COORDINATE THE LOCATIONS OF CONCEALED FEEDERS AND BRACH HOME RUNS THE GENERAL CONTRACTOR. PROVIDE EQUIPMENT WEIGHTS, EQUIPMENT DIMENSIONS, PLATFORM SIZES & LOCATIONS, CONCRETE PAD SIZES AND LOCATIONS AST REQUIRED. COORDINTAE LOCATIONS OF POWER, DISCONNECTS, AND CONTROL CONDUIT WITH THE MECHANICAL CONTRACTOR. COORDINATE LOCATIONS OF ALL LIGHTS WITH ARCHITECTURAL PLANS, MECHANICAL PLANS AND ARCHITECTURAL ELEVATIONS.
6. THE ELECTRICAL DESIGN HAS BEEN BASE ON THE INSTALLATION OF 75°C CONDUCTORS CONNECTED TO TERMINAL LUGS AND EQUIPMENTN U.L. LISTED FOR A MINIMUM OF 75°C. CONDUCTORS TERMINATED ON EQUIPMENT WITH LOWER RATING (60°C) OR NO RATING SHOWN TO HAVE CONDUCTOR SIZE INCREASED TO CONFORM TO N.E.C. TABLE 310-16 AND U.L. NO. 489 REQUIREMENTS.
7. PANELBOARDS, DISCONNECT SWITCHES AND CONTACTORS ARE TO BE LISTED AND IDENTIFIED AS RATED FOR A MINIUM 75°C CONDUCTOR TERMINATION.
8. CONDUCTORS:
   A. ALL CONDUCTORS SHALL BE COPPER WITH 75 DEGREE C INSULATION RATED AT 600 V AS FOLLOWS:
      1.) INDOOR AND DRY LOCATIONS: THHN OR THWN
      2.) OUTDOOR AND WET LOCATIONS: THWN
      3.) SERVICE ENTRANCE: RHW
   B. CONDUCTORS SHALL BE A MINIMUM OF #12 .
   C. ALL POWER CIRCUITS SHALL HAVE 2 #12 CONDUCTORS AND 1 #8 GROUND CONDUCTOR IN A 1/2" CONDUIT UNLESS NOTED OTHERWISE.
9. CONDUCTORS SHALL BE CONTINUOUS FROM OVER-CURRENT PROTECTIVE DEVICE TO TERMINAL OR FARTHEST OUTLET. NO JOINTS SHALL BE MADE EXCEPT IN PULL, JUNCTION OR OUTLET BOXES.
10. CONDUIT:
    A. RIGID STEEL CONDUIT: FEEDERS EXPOSED TO WEATHER AND UNDERGROUND CIRCUITS WHEN FIELD WRAPPED WITH 10 MIL TAPE HALF-LAPPED.
    B. ELECTRICAL METALLIC TUBING (EMT): INTERIOR POWER & LIGHTING CIRCUITS.
    C. FLEXIBLE METALLIC CONDUIT: DRY LOCATIONS FOR CONNECTION FROM ADJACENT OUTLET BOXES TO TRANSFOMERS, VIBRATING EQUIPMENT, AND TO LIGHTING FIXTURES INSTLLED IN SUSPENDED CEILINGS.
    D. LIQUID TIGHT FLEXIBLE METALLIC CONDUIT: IN DAMP AND WET LOCATIONS FOR CONNECTIONS TO ALL PUMP MOTORS, SOLENOID VALVES, HVAC EQUIPMENT, AND SIMILAR DEVICES.
    E. PVC CONDUIT: SCHEDULE 40 PVC FOR UNDERGROUND USE WITH 3 INCHES OF SAND UNDER AND 6 INCHES OF SAND OVER, OR MAY BE ENCASED IN CONCRETE.
11. METALLIC CONDUITS MAY BE USED AS A GROUNDING MEANS IN ACCORDANCE WITH SECTION 250.118 UNLESS NOTED OTHERWISE. A SEPARATE GROUNDING CONDUCTOR SHALL BE INSTALLED IN IN ALL NON-METALLIC CONDUIT RUNS.
12. JOINTS IN WIRES SMALLER THAN NO. 6 SHALL BE MADE WITH IDEAL SUPER WIRE NUTS OR SCOTCH TYPE "R", "Y", OR "B" SPRING CONNECTORS. JOINTS IN WIRES NO. 6 AND LARGER SHALL BE MADE WITH APPROVED SOLDERLESS CONNECTORS. ALL JOINTS IN CABLES NO. 6 AND LARGER SHALL BE INSULATED AND TAPED.
13. ALL EQUIPMENT, CONDUITS, RACEWAYS, SUPPORTS, AND OTHER DEVICES OUTSIDED OF THE BUILDING OR EXPOSED TO WEATHER, SHALL BE COMPLETELY WEATHER-PROOFED.
14. PROVIDE A CODE APPROVED DISCONNECT SWITCH OR BREAKER WITHIN SIGHT OF EVERY MOTOR AND FEED MOTORS NOT EQUIPPED WITH "BUILT IN" PROTECTION THROUGH A MAGNETIC OR MANUAL STARTER WITH OVERLOAD HEATERS SIZED TO COMPLY WITH THE MOTOR MANUFACTURER'S RECOMMENDATION AND APPLICABLE CODE.
15. ALL PANELBOARDS, SWITCHBOARDS, AND LINE VOLTAGE CONTROL EQUIPMENT SHALL BE FIELD LABELED TO WARN QUALIFIED PERSONS OF POTENTIAL ARC FLASH HAZARDS. LABELING SHALL BE LOCATED SUCH THAT IT IS CLEARLY VISIBLE TO QUALIFIED PERSONS BEFORE EXAMINATION, ADJUSTING, SERVICING, OR MAINTENANCE OF EQUIPMENT. LABELING SHALL BE SELF ADHESIVE COMMERCIAL LABEL CONFORMING TO NEC 110.16 AND ANSI Z535.4 AS MANUFACTURED BY IDEAL OR APPROVED EQUAL.
16. FOR CONNECTIONS TO EXHAUST FANS, PUMPS, COMPRESSORS, SPACE HEATERS WATER HEATERS, AQUASTATS, SOLENOID VALVES AND OTHER MECHANICAL EQUIPMENT AND FOR CONDUIT AND WIRE REQUIRED BUT NOT NECESSARILY SHOWN ON THESE DRAWINGS EDITION OF "GUIDELINES FOR SEISMIC RESTRAINTS OF MECHANICAL SYSTEMS AND REFER TO MECHANICAL PLANS AND DETERMINE EXACT LOCATIONS UNDER DIRECTION OF THE HVAC CONTRACTOR.
17. FOR CIRCUITS FED THROUGH FLUORESCENT FIXTURE CHANNELS AND FEEDS TO RECESSED INCANDESCENT FIXTURES USE INSULATED WIRE OF 90 DEGREES CELSIUS RATING.
18. IN EACH CONDUIT WITHOUT CONDUCTORS, PROVIDE ONE #12 TW COPPER PULL-WIRE WITH A TAG IDENTIFYING LOCATION OF OPPOSITE END.
19. SIZE OUTLET BOXES IN CONFORMITY WITH CODE FOR NUMBER AND GAUGE OF CONDUCTORS THEREIN, EXCEPT WHERE NOTED TO BE LARGER. MINIMUM BOX SIZE SHALL BE 4" SQUARE AND 1-1/2" DEEP.
20. EXAMINE PLANS TO DISCERN CEILINGS WITH A FIRE RATING OF ONE HOUR OR MORE, PROVIDE A ONE HOUR FIRE-RATED ENCLOSURE OVER EACH LIGHT FIXTURE RECESSED THEREIN.
21. PROVIDE OWNER WITH THREE SETS OF AS-BUILT PLANS AND OPERATIONS AND MAINTENANCE MANUALS. CLEARLY IDENTIFY ALL EQUIPMENT WITH PERMANENT PLASTIC OR METAL LABELS/TAGS (PEN MARKING NOT ACCEPTABLE).
22. PROVIDE ONE YEAR WARRANTY ON ALL LABOR, PARTS AND MATERIALS.
23. ANY CHANGE OR DEVIATION FROM THESE PLANS OR SPECIFICATIONS SHALL REQUIRE THE WRITTEN APPROVAL OF THE ARCHITECT/ENGINEER PRIOR TO COMMENCEMENT OF SUCH WORK.

ELECTRICAL SYMBOL SCHEDULE

2,4,6	HOME RUN TO PANEL CIRCUIT NUMBERS. ALL CONDUCTORS TO BE #12 EXCEPT AS NOTED ON PANEL SCHEDULE. CONDUIT TO BE 1/2" OR AS NOTED ON PANEL SCHEDULE.
——DC——	DIRECT CURRENT WIRING, 2#12 IN 1/2" CONDUIT.
$	SINGLE POLE SWITCH, 20A, +3'-10" OR AS NOTED.
3	Three Way SWITCH, 20A, +3-10 AFF
D	Dimmer - 2000 WATT UND, LUTRON #N-2000
FD	Flourscent Dimmer - 2000 WATT UND, LUTRON #NTF-2
K	Key Operated
WP	Water Proof
M	MOTION DETECTOR
	SINGLE RECEPTACLE: NEMA 5-20R, +18" UND
	DOUBLE DUPLEX RECEPTACLE,: 5-20R, +18" AFF UND
	Isolated Ground
	DUPLEX RECEPTACLE: NEMA 5-20R, +18" UND
	Mount 8 Inches above Counter Tops UND
WP	Water Proof
+18"	Height above Floor to Center LIne of Fixture
GFI	Box
IG	Ground Fault Interrupter
S	Isolated Ground Type
T	One Switched/ Balance Unswitched
	Tamper Proof
	Box around Receptacle indicates FLUSH FLOOR MOUNTED
J	JUNCTION BOX.
	DISCONNECT SWITCH, NON-FUSABLE, 30A-3P UND
	COMBINATION MOTOR STARTER W/DISCONNECT SWITCH.
	DISCONNECT SWITCH FURNISHED WITH EQUIPMENT.(INSTALLED BY ELEC. CONT.)
	MOTOR CONNECTION.
	120/240V., PANELBOARD, TOP 6'-0".
device	TRANSFORMER
	PUSHBUTTON
S	CEILING MOUNTED SOUND SYSTEM SPEAKER
$VC	SOUND SYSTEM VOLUME CONTROL
SD	SMOKE DETECTOR
TV	DUPLEX TV OUTLET IN WALL, ONE RJ6 COAXIAL F-CONNECTOR ONE RJ45 OUTLET AT +18 AFF UND
	TWO GANG DATA CABLE J-BOX WITH PLASTER RING +18" OR AS NOTED W/ 3/4" CONDUIT TO ABOVE CEILING.
	DUPLEX RJ45 DATA OUTLET, +18" AFF/ +8" ABOVE COUNTER OR AS NOTED W/ 3/4" CONDUIT TO ABOVE CEILING.
	DUPLEX RJ45 TELECOMMUNICATIONS OUTLET, +18" AFF/ +8" ABOVE COUNTER OR AS NOTED W/ 3/4" CONDUIT TO ABOVE CEILING.
	DUPLEX RJ45 DATA/TELECOM OUTLET, +18" AFF/ +8" ABOVE COUNTER OR AS NOTED W/ 3/4" CONDUIT TO ABOVE CEILING.
	INTERCOM
	CEILING MOUNTED EXHAUST FAN
OS	OCCUPANT SENSOR

SPECIAL NOTICE TO CONTRACTORS

1. ALL CONTRACTORS (GENERAL CONTRACTOR AND SUB-CONTRACTORS) BIDDING THIS PROJECT ARE TO CAREFULLY REVIEW ALL CONSTRUCTION DOCUMENTS AND NOTE ANY DISCREPANCIES BETWEEN THE CONSTRUCTION DOCUMENTS AND THE CONDITIONS OBSERVED AT THE JOB SITE PRIOR TO SUBMISSION OF ANY BID. THE BUILDING OWNER REPRESENTATIVE LISTED BELOW MAY BE CONTACTED FOR ACCESS TO THE JOB SITE.
2. CONTRACTORS ARE RESPONSIBLE FOR VERIFYING THE LOCATION AND CONDITION OF ALL POINTS OF CONNECTION, LOCATION AND CONDITION OF ALL BUILDING (ROOF/FLOOR/CEILING) PENETRATIONS, LOCATION AND CONDITION OF ALL UTILITIES AND BUILDING SYSTEMS INCLUDING, BUT NOT LIMITED TO, GAS, WATER, SEWER, VENT, ELECTRICAL, BUILDING MECHANICAL SYSTEMS, DUCT CONNECTIONS, EXHAUST/OUTSIDE AIR CONNECTIONS, SECURITY, FIRE ALARM, DATA, AND PHONE PRIOR TO SUBMISSION OF THEIR BID.
3. ANY DISCREPANCIES BETWEEN THE CONSTRUCTION DOCUMENTS AND THE CONDITIONS OBSERVED SHALL BE BROUGHT TO THE ATTENTION, IN WRITING, TO THE ARCHITECT AND/OR ENGINEER PRIOR TO PROCEEDING WITH CONSTRUCTION.

BUILDING CODES:

CITY OF EAST BERNARD CURRENT BUILDING CODES:

2018 International Building Code with amendments
2018 International Residential Code with amendments
2018 International Property Maintenance Code with amendments
2018 International Plumbing Code with amendments
2018 International Fuel Gas Code with amendments
2018 International Mechanical Code with amendments
2018 International Fire Code with amendments
2018 International Energy Code with amendments
2018 International Swimming Pool & Spa Code
2020 National Electrical Code with amendments

VCS architects
19251 Purus Dr.
Porter, TX 77365

CONSULTANTS

SOURCE2LOAD
Source2Load Engineering and Consulting, LLC
"Powering Solutions"
TBPE Firm No. F-15125
9337 Katy Freeway Suite B #282
Houston, Texas 77024
Office: (713) 497-5114
Fax: 281-416-5080
Email: info@source2load.com
www.source2load.com

BATES ALLEN PARK
BLACK COWBOY MUSEUM
630 CHARLIE ROBERTS LANE

STATE OF TEXAS
CHAD X. SLATER, SR.
107749
LICENSED PROFESSIONAL ENGINEER

09/23/24

Drawing Date: 06/03/2024
Drawn By: SMA
Checked By: DDV
Scale: AS NOTED

Revisions:

DESCRIPTION	
ISSUE FOR BID & CONSTRUCTION	09/23/2024

ELECTRICAL SPECIFICATIONS

Drawing Name

E.001

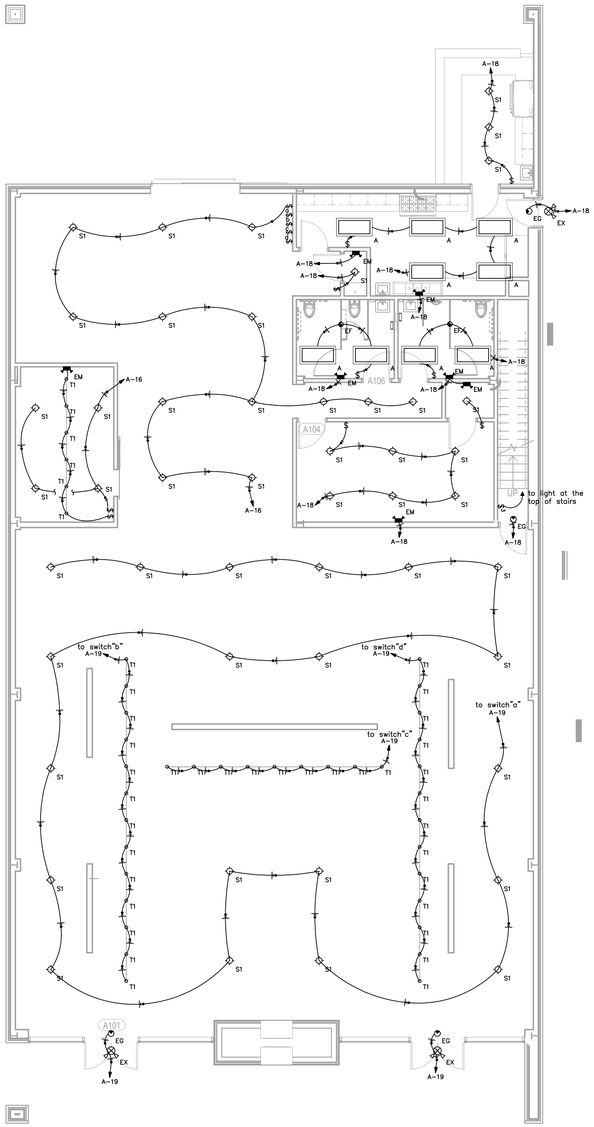

1 ELECTRICAL LIGHTING PLAN-1ST FLOOR
SCALE: 1/8" = 1'-0"

LUMINAIRE SCHEDULE

CALLOUT	SYMBOL	LAMP	DESCRIPTION	BALLAST	MOUNTING	MODEL	APPROX WATTAGE	VOLTS	QUANTITY
A		(1)	2 x 4 FLUORESCENT LIGHT FIXTURE	ELECTRONIC	CEILING		32	120V 1P 2W	22
EF	⊕	(1)	EXHAUST FAN + TIMER SWITCH	ELECTRONIC	CEILING	FANSONIC FV-05VF1	9.2	120V 1P 2W	4
EX	⊙	(1)	EMERGENCY EXIT LIGHTING	ELECTRONIC	CEILING	TO BE DETERMINED BY OWNER	4.3	120V 1P 2W	4
EM	⊶	(1)	EMERGENCY EXIT FIXTURE W/ 90 MIN BATTERY BACKUP		CEILING	LIGHTING LIGHTING SOLUTIONS	2.88	120V 1P 2W	7
EX	⊼	(1) 4.3W	EMERGENCY EXIT COMBO FIXTURE	ELECTRONIC	CEILING	(TO BE DETERMINED BY OWNER)	4.3	120V 1P 2W	2
W	◇	(1)	7" LED SURFACE MOUNT DOWNLIGHT		SURFACE	JUNO LIGHTING 7" LED DOWNLIGHT TRI TRACK 4W 4000K 120 DEG. 90+ CRI	13	120V 1P 2W	73
T1	•	(1)	4' ROUND 8" TALL ADJUSTABLE LED TRACK HEAD LIGHT	ELECTRONIC	PENDANT	JUNO LIGHTING LT4RD8-SW-BK	15	120V 1P 2W	41

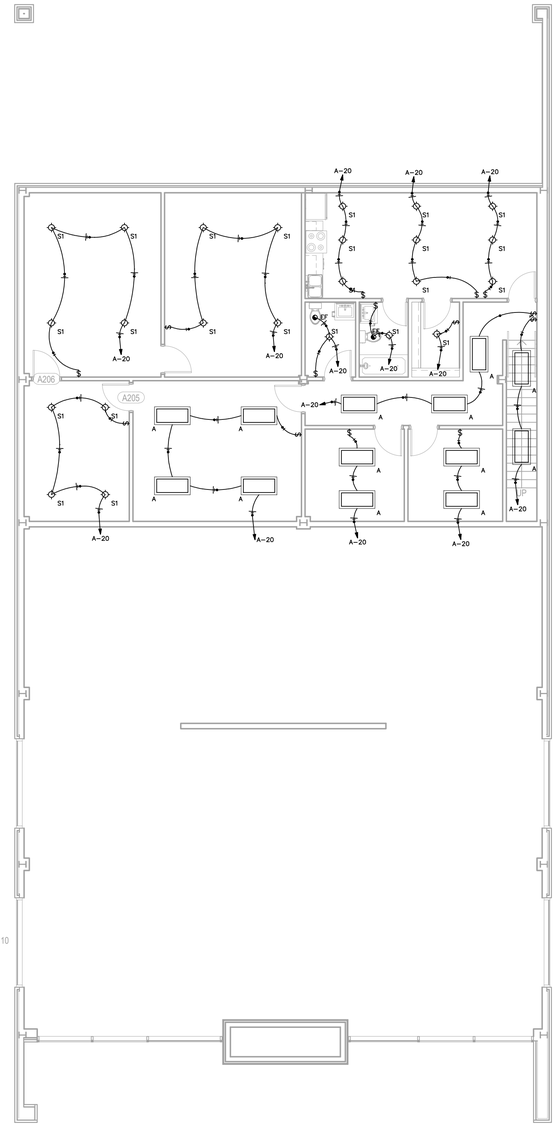

2 ELECTRICAL LIGHTING PLAN-2ND FLOOR
SCALE: 1/8" = 1'-0"

19251 Purus Dr.
Porter, TX 77365

CONSULTANTS

SOURCE2LOAD
Source2Load Engineering and Consulting, LLC
"Powering Solutions"
TBPE Firm No. F-15125
9337 Katy Freeway Suite B #282
Houston, Texas 77024
Office: (713) 497-5114
Fax: 281-416-5080
Email: info@source2load.com
www.source2load.com

BATES ALLEN PARK
BLACK COWBOY MUSEUM
630 CHARLIE ROBERTS LANE

STATE OF TEXAS
CHAD X. SLATER, SR.
107749
LICENSED PROFESSIONAL ENGINEER
09/23/24

Drawing Date: 06/03/2024
Drawn By: SMA
Checked By: DDV
Scale: AS NOTED

Revisions:

DESCRIPTION	
ISSUE FOR BID & CONSTRUCTION	09/23/24

ELECTRICAL LIGHTING PLAN

Drawing Name

E.002

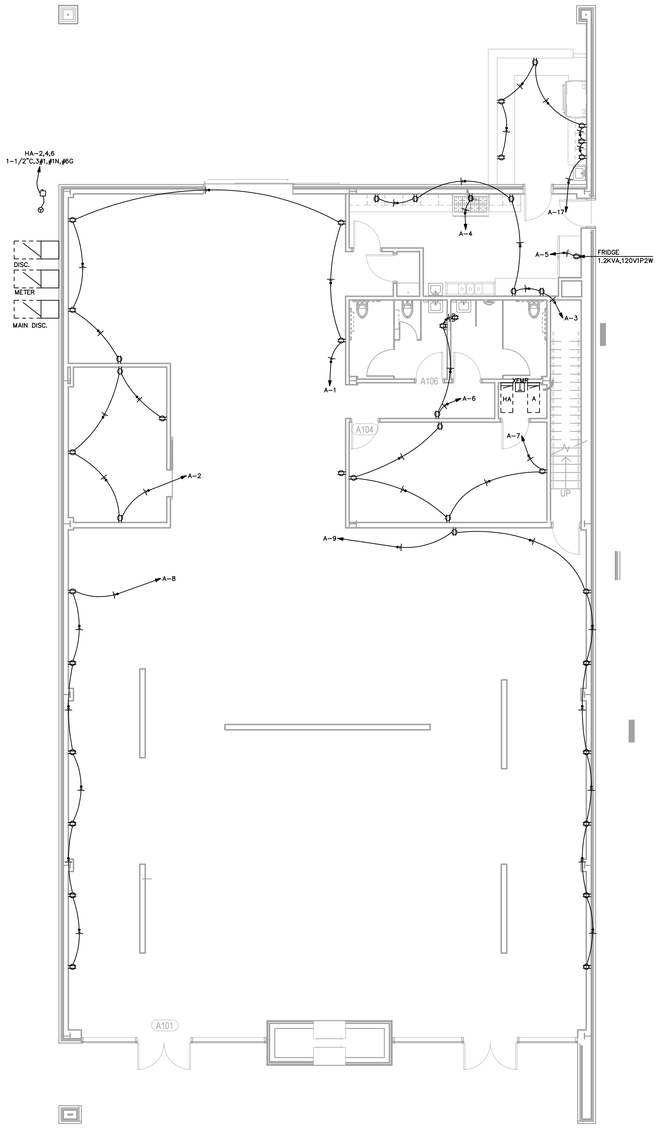

1 ELECTRICAL POWER PLAN-1ST FLOOR
SCALE: 1/8" = 1'-0"

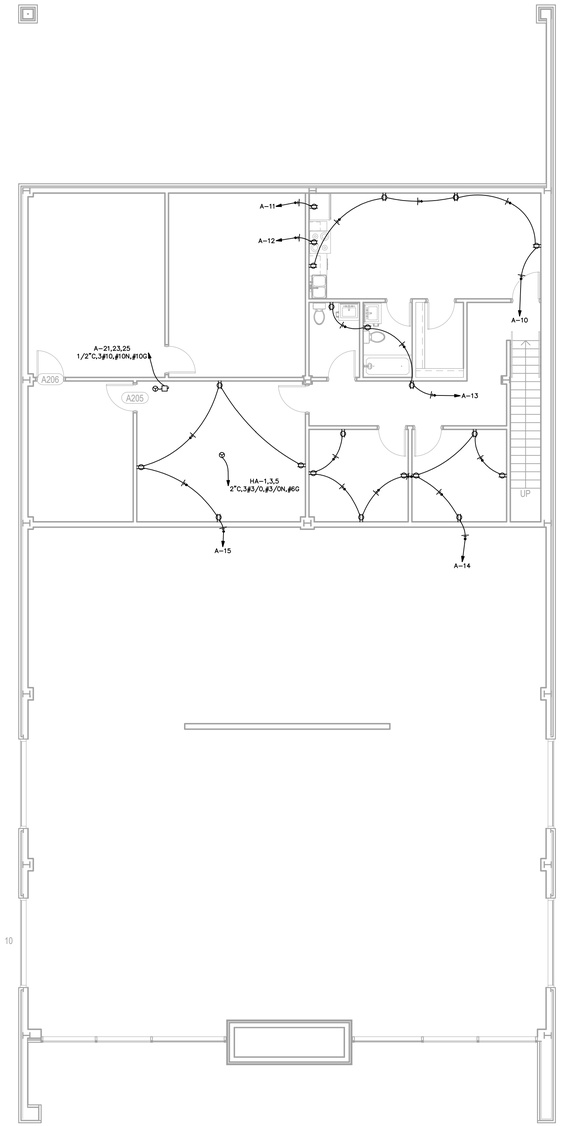

2 ELECTRICAL POWER PLAN-2ND FLOOR
SCALE: 1/8" = 1'-0"

VCS architects

19251 Purus Dr.
Porter, TX 77365

CONSULTANTS

SOURCE2LOAD
Source2Load Engineering and Consulting, LLC
"Powering Solutions"
TBPE Firm No. F-15125
9337 Katy Freeway Suite B #282
Houston, Texas 77024
Office: (713) 497-5114
Fax: 281-416-5080
Email: info@source2load.com
www.source2load.com

BATES ALLEN PARK
BLACK COWBOY MUSEUM
630 CHARLIE ROBERTS LANE

STATE OF TEXAS
CHAD X. SLATER, SR.
107743
LICENSED PROFESSIONAL ENGINEER

09/23/24

Drawing Date: 06/03/2024
Drawn By: SMA
Checked By: DDV
Scale: AS NOTED

Revisions:

DESCRIPTION	
ISSUE FOR BID & CONSTRUCTION	09/23/2024

ELECTRICAL POWER PLAN

Drawing Name

E.003

HA

ROOM
MOUNTING FLUSH
FED FROM DISC.
NOTE

VOLTS 480Y/277V 3P 4W
BUS AMPS 350
NEUTRAL 100%

AIC 22,000
MAIN BKR 350
LUGS STANDARD

CKT #	CKT BKR	CIRCUIT DESCRIPTION	LOAD KVA A	B	C	CKT #	CKT BKR	CIRCUIT DESCRIPTION	LOAD KVA A	B	C
1	200/3	AHU-1	41.6			2	110/3	ACCU-1	23.6		
3	|			41.6		4	|			23.6	
5	|				41.6	6	|				23.6
7	20/1	SPACE	0			8	60/3	XFMR XFMR	10.6		
9	20/1	SPACE		0		10	|			8.78	
11	20/1	SPACE			0	12	|				8.44
13	20/1	SPACE	0			14	20/1	SPACE	0		
15	20/1	SPACE		0		16	20/1	SPACE		0	
17	20/1	SPACE			0	18	20/1	SPACE			0
19	20/1	SPACE	0			20	20/1	SPACE	0		
21	20/1	SPACE		0		22	20/1	SPACE		0	
23	20/1	SPACE			0	24	20/1	SPACE			0
25	20/1	SPACE	0			26	20/1	SPACE	0		
27	20/1	SPACE		0		28	20/1	SPACE		0	
29	20/1	SPACE			0	30	20/1	SPACE			0
31	20/1	SPACE	0			32	20/1	SPACE	0		
33	20/1	SPACE		0		34	20/1	SPACE		0	
35	20/1	SPACE			0	36	20/1	SPACE			0
37	20/1	SPACE	0			38	20/1	SPACE	0		
39	20/1	SPACE		0		40	20/1	SPACE		0	
41	20/1	SPACE			0	42	20/1	SPACE			0
								TOTAL CONNECTED KVA BY PHASE	75.7	73.9	73.6

	CONN KVA	CALC KVA			CONN KVA	CALC KVA	
LIGHTING	2.29	2.86	(125%)	MOTORS	208	208	(100%)
LARGEST MOTOR	125	31.2	(25%)	RECEPTACLES	12.4	11.2	(50%>10)
				TOTAL LOAD		254	
				BALANCED 3-PHASE LOAD		305 A	

XFMR

ROOM
FED FROM HA
NOTE

PRIMARY VOLTS 480Y/277V 3P 4W
SECONDARY VOLTS 208Y/120V 3P 4W

AIC 10,000
KVA 37.5

CKT #	BREAKER TRIP/POLES	CIRCUIT DESCRIPTION	LOAD KVA A	B	C	FEEDER RACEWAY AND CONDUCTORS
1	200/3	PANEL A	10.6	8.78	8.44	2"C.,3#3/0,#3/0N,#4G
		TOTAL CONNECTED KVA BY PHASE	10.6	8.78	8.44	

	CONN KVA	CALC KVA			CONN KVA	CALC KVA	
LIGHTING	2.29	2.86	(125%)	MOTORS	13.1	13.1	(100%)
LARGEST MOTOR	8.31	2.08	(25%)	RECEPTACLES	12.4	11.2	(50%>10)
				TOTAL LOAD		29.3	
				BALANCED 3-PHASE LOAD		81.2 A	

A

ROOM
MOUNTING FLUSH
FED FROM XFMR
NOTE

VOLTS 208Y/120V 3P 4W
BUS AMPS 200
NEUTRAL 100%

AIC 10,000
MAIN BKR 200
LUGS STANDARD

CKT #	CKT BKR	CIRCUIT DESCRIPTION	LOAD KVA A	B	C	CKT #	CKT BKR	CIRCUIT DESCRIPTION	LOAD KVA A	B	C
1	20/1	DISPLAY AREA 102 RECEPTACLE	0.9			2	20/1	GUN ROOM 103 RECEPTACLE	0.72		
3	20/1	KITCHEN 109 RECEPTACLE		0.9		4	20/1	RANGE		1.2	
5	20/1	FRIDGE			1.2	6	20/1	RESTROOMS/CORRIDOR 1ST FLOOR RECEPTACLE			0.54
7	20/1	OFFICE 104 RECEPTACLE	0.72			8	20/1	DISPLAY AREA 101 RECEPTACLE	1.98		
9	20/1	DISPLAY AREA 101 RECEPTACLE		2.16		10	20/1	LIVING AREA RECEPTACLE		0.72	
11	20/1	FRIDGE			1.2	12	20/1	STOVE/OVEN			1.2
13	20/1	RESTROOMS/CORRIDOR 2ND FLOOR RECEPTACLE	0.54			14	20/1	OFFICES 201/202 RECEPTACLE	1.44		
15	20/1	CONFERENCE ROOM RECEPTACLE		0.72		16	20/1	DISPLAY AREA/GUN AREA LIGHTING		0.311	
17	20/1	BAR AREA RECEPTACLE			1.08	18	20/1	KITCHEN/RESTROOMS/OFFICE LIGHTING			0.449
19	20/1	MAIN DISPLAY AREA LIGHTING	0.802			20	20/1	2ND LEVEL LIGHTING	0.728		
21	30/3	WATER HEATER		2.77		22	20/1	SPACE		0	
23	|				2.77	24	20/1	SPACE			0
25	|		2.77			26	20/1	SPACE	0		
27	20/1	SPACE		0		28	20/1	SPACE		0	
29	20/1	SPACE			0	30	20/1	SPACE			0
31	20/1	SPACE	0			32	20/1	SPACE	0		
33	20/1	SPACE		0		34	20/1	SPACE		0	
35	20/1	SPACE			0	36	20/1	SPACE			0
37	20/1	SPACE	0			38	20/1	SPACE	0		
39	20/1	SPACE		0		40	20/1	SPACE		0	
41	20/1	SPACE			0	42	20/1	SPACE			0
								TOTAL CONNECTED KVA BY PHASE	10.6	8.78	8.44

	CONN KVA	CALC KVA			CONN KVA	CALC KVA	
LIGHTING	2.29	2.86	(125%)	MOTORS	13.1	13.1	(100%)
LARGEST MOTOR	8.31	2.08	(25%)	RECEPTACLES	12.4	11.2	(50%>10)
				TOTAL LOAD		29.3	
				BALANCED 3-PHASE LOAD		81.2 A	

FAULT CURRENT SCHEDULE

DEVICE	*FAULT*	*AIC RATING*	*L-L VOLTS*	*FEEDER SIZE*	*FEEDER LENGTH*	*TRANSFORMER KVA*	*TRANSFORMER Z%*	*TRANSFORMER FAULT AT PRIMARY*	*MOTOR FAULT*
MAIN DISC.	34,436	42,000	480V	#500kcmil					985
METER	32,226	42,000	480V	#500kcmil	13'				987
DISC.	30,291	42,000	480V	#500kcmil	13'				990
HA	22,591	*22,000*	480V	#500kcmil	75'				1,001
XFMR	5,433	10,000	208V	#4	11'	37.5	1.75	18,643	168
A	5,275	10,000	208V	#3/0	12'				167

In lieu of the maximum available fault current marking as required by 110.24, a permanently affixed label shall be applied with the fault current at the time of installation and calculation. The label shall be 2"x3" in size and shall be blue lettering on a contrasting background. This label shall also include the date of the calculation: 3/15/23.

FEEDER SCHEDULE

ID	*FEEDER AMPS*	*CONDUIT AND FEEDER*
60	60	1-1/4"C.,3#4,#4N,#10G
200J	200	2"C.,3#3/0,#3/0N,#4G
350	350	3-1/2"C.,3#500kcmil,#500kcmil N,#2G

SIZING METHOD: COPPER, 60°C #12 THROUGH #1, 75°C 1/0 AND ABOVE

NEC ARTICLE 110.3 (B) REQUIREMENTS FOR ELECTRICAL INSTALLATION

(B) INSTALLATION AND USE. LISTED OR LABELED EQUIPMENT SHALL BE INSTALLED AND USED IN ACCORDANCE WITH ANY INSTRUCTIONS INCLUDED IN THE LISTING OF LABELING.

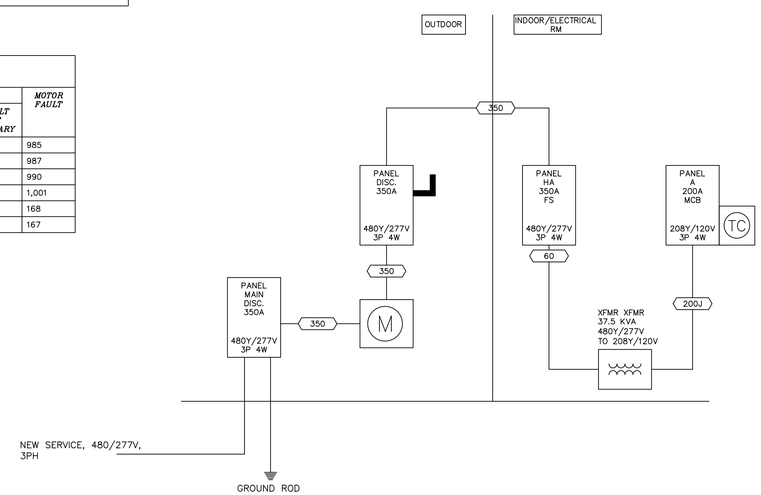

1 ONE-LINE DIAGRAM
NOT TO SCALE

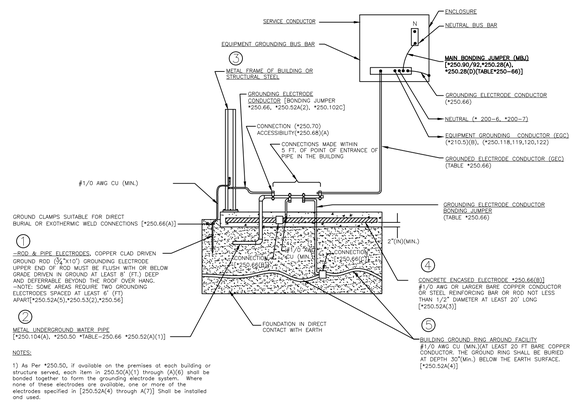

VCS architects
19251 Purus Dr.
Porter, TX 77365

CONSULTANTS

SOURCE2LOAD
Source2Load Engineering and Consulting, LLC
"Powering Solutions"
TBPE Firm No. F-15125
9337 Katy Freeway Suite B #282
Houston, Texas 77024
Office: (713) 497-5114
Fax: 281-416-5080
Email: info@source2load.com
www.source2load.com

BATES ALLEN PARK
BLACK COWBOY MUSEUM
630 CHARLIE ROBERTS LANE

STATE OF TEXAS
CHAD X. SLATER, SR.
107149
LICENSED PROFESSIONAL ENGINEER
09/23/24

Drawing Date: 06/03/2024
Drawn By: SMA
Checked By: DDV
Scale: AS NOTED

Revisions:

DESCRIPTION	
ISSUE FOR BID & CONSTRUCTION	09/23/2024

ELECTRICAL SCHEDULES & ONE-LINE DIAGRAM

Drawing Name

E.004

Luminaire list (Site 1)

Symbol	Index	Manufacturer	Article name	Item number	Fitting	Luminous flux	Maintenance factor	Connected load	Quantity
	1	Cooper Lighting	SLIM WALL PACK, WATTAGE AND CCT SELECTABLE	ASWPLED1S-15W-4000K	98x (98) 4000K CCT, 70 CRI LEDS	2161 lm	0.80	15 W	8
	2	Cooper Lighting	INVUE CLEARCUMYK POLE-MOUNT Wave Stream LUMINAIRE WITH T4W DISTRIBUTION LENS	CCP-VA-6-740-U-T4W	1x 4000K CCT, 70 CRI LEDS	10092 lm	0.80	101.1 W	9

#	Name	Parameter	Min	Max	Average	Mean/Min	Max/Min
1	SITE	Perpendicular Illuminance	0.11 fc	3.71 fc	0.94 fc	8.48	33.54
2	20' BEYOND PROPERTY LINE - 2	Perpendicular Illuminance	0.052 fc	0.96 fc	0.32 fc	6.23	18.56
3	20' BEYOND PROPERTY LINE - 3	Perpendicular Illuminance	0.051 fc	2.02 fc	0.42 fc	8.21	39.73
4	20' BEYOND PROPERTY LINE - 1	Perpendicular Illuminance	0.013 fc	0.53 fc	0.14 fc	11.41	42.59

REVISIONS

NO.	DESCRIPTION	DATE	BY
1	CITY COMMENT	9-28-24	CS
2			
3			

BATES ALLEN PARK
BLACK COWBOY MUSEUM
CHARLIE ROBERTS LANE

SCALE: 1/32"=1'-0"
DATE: 9/14/2024

PHOTOMETRIC STUDY PLAN

APPROVED BY: DATE:

PROJECT NO.

SHEET NO.

SE-1

SOURCE2LOAD
Source2Load Engineering and Consulting, LLC
"Powering Solutions"
TBPE Firm No. F-15125
800 Town & Cuntry St. Blvd, Suite 500
Houston, Texas 77024
Office: (713) 497-5114
Fax: 281-416-5080
Email: info@source2load.com
www.source2load.com
STATE OF TEXAS
CHAD X. SLATER, SR.
107743
LICENSED PROFESSIONAL ENGINEER
09/29/24

(Location:)

*	LOAD SUMMARY	CL	DF	CONNECTED LOAD A	CONNECTED LOAD C	DEMAND TOTAL
L	Lighting	1.03	1.25	0.63	0.40	1.29
R	Convenience Recept					
H	Heating (Space)		1.25			
C	Cooling		1.00			
A	HVAC		1.00			
P	Process		1.00			
O	Other Continuous		1.25			
K	Kitchen		0.65			
N	Noncontinuous		1.00			
			1.00			
	Total	1.03		0.63	0.40	1.29

Total Demand Load (KVA)	1.29
Total Demand Current (A)	5.36
Min. Feeder Ampacity (A)	6.70

	DESCRIPTION	*	CB	KVA	A	C	KVA	CB	DESCRIPTION	*	
1	AREA LIGHTING AT SITE	L	20A-1P	0.51	0.63		0.12	20A-1P	WALL PACK LIGHTING AT SITE	L	2
3	AREA LIGHTING AT SITE	L	20A-1P	0.40		0.40		20A-1P	SPARE		4
5	SPARE		20A-1P					20A-1P	SPARE		6
7	SPARE		20A-1P					20A-1P	SPARE		8
9	SPARE		20A-1P					20A-1P	SPARE		10
11	SPARE		20A-1P					20A-1P	SPARE		12
13	SPARE		20A-1P					20A-1P	SPARE		14
15	SPARE		20A-1P					20A-1P	SPARE		16
17	SPARE		20A-1P					20A-1P	SPARE		18
19	SPARE		20A-1P					20A-1P	SPARE		20
21	SPARE		20A-1P					20A-1P	SPARE		22
23	SPARE		20A-1P					20A-1P	SPARE		24
			(KVA)					Updated	xx.xx.xxxx		
			Total Connected Load		0.63	0.40					

PANEL S

PANELBOARD DESIGNATION

SYSTEM VOLTAGE	240/120V, 1Φ, 3W
BUS SIZE	100
SYSTEM TYPE	NORMAL
FEEDER PROT	100A-1P CB Bus Plug
CONDUCTOR SIZE	2 AWG - #6G CU
CONDUCTOR/PHASE	1
MAINS	100A MCB
SCCR	FULLY RATED
MCB RATING	80%
GROUND FAULT	NO
FEEDER LENGTH (FT)	50
FEEDER V. DROP (%)	0.810
FAULT CURRENT	
KAIC RATING	22
ENCLOSURE	TYPE 1

SOURCE2LOAD
Source2Load Engineering and Consulting, LLC
"Powering Solutions"
TBPE Firm No. F-10125
800 Town & Country St. Blvd, Suite 500
Houston, Texas 77024
Office: (713) 497-5114
Fax: 281-416-5080
Email: info@source2load.com
www.source2load.com
STATE OF TEXAS
CHAD X. SLATER, SR.
107743
LICENSED PROFESSIONAL ENGINEER
09/29/24

REVISIONS

NO.	DESCRIPTION	DATE	BY
1	CITY COMMENT	9-28-24	CS
2			
3			

BATES ALLEN PARK
BLACK COWBOY MUSEUM
CHARLIE ROBERTS LANE

SCALE: 1/32"=1'-0"
DATE: 9/14/2024

SITE LIGHTING PLAN

APPROVED BY: DATE:

PROJECT NO.

SHEET NO.
SE-2

Site 1

Luminaire layout plan

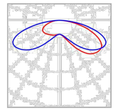

Manufacturer	Cooper Lighting	P	101.1 W
Article No.	CCP-VA-6-740-U-T4W	$\Phi_{Luminaire}$	10092 lm
Article name	INVUE CLEARCURVE POLE MOUNT Wave Stream LUMINAIRE WITH T4W DISTRIBUTION LENS		
Fitting	1x 4000K CCT, 70 CRI LEDS		

Individual luminaires

X	Y	Mounting height	Luminaire
48.343 ft	318.660 ft	20.000 ft	1
-53.462 ft	313.051 ft	20.000 ft	2
82.602 ft	240.000 ft	20.000 ft	3
-32.288 ft	227.129 ft	20.000 ft	4
132.268 ft	141.784 ft	20.000 ft	5
0.365 ft	124.773 ft	20.000 ft	6
166.201 ft	78.270 ft	20.000 ft	7
147.753 ft	-7.768 ft	20.000 ft	16
-25.668 ft	-24.296 ft	20.000 ft	17

Site 1

Luminaire layout plan

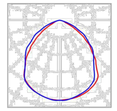

Manufacturer	Cooper Lighting	P	15.0 W
Article No.	ASWPLED1S-15W-4000K	$\Phi_{Luminaire}$	2161 lm
Article name	SLIM WALL PACK, WATTAGE AND CCT SELECTABLE		
Fitting	98x (98) 4000K CCT, 70 CRI LEDS		

Individual luminaires

X	Y	Mounting height	Luminaire
13.912 ft	60.177 ft	12.000 ft	8
102.119 ft	60.177 ft	12.000 ft	9
52.028 ft	60.153 ft	12.000 ft	10
-0.182 ft	31.141 ft	12.000 ft	11
125.156 ft	29.993 ft	12.000 ft	12
65.323 ft	-0.120 ft	12.000 ft	13
15.232 ft	-0.144 ft	12.000 ft	14
103.439 ft	-0.144 ft	12.000 ft	15

Site 1

Luminaire layout plan

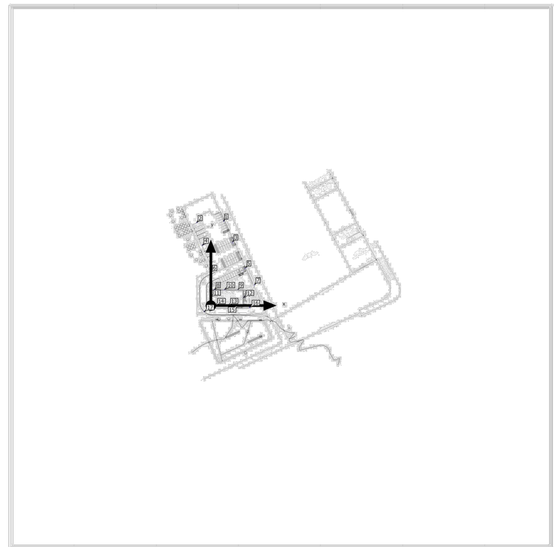

REVISIONS

NO.	DESCRIPTION	DATE	BY
1	CITY COMMENT	9-28-24	CS
2			
3			

BATES ALLEN PARK
BLACK COWBOY MUSEUM
CHARLIE ROBERTS LANE

SCALE:

DATE: 9/14/2024

PHOTOMETRIC DATA

APPROVED BY: DATE:

PROJECT NO.

SHEET NO.

SE-3

SOURCE2LOAD

Source2Load Engineering and Consulting, LLC.
"Powering Solutions"
TBPE Firm No. F-15125
800 Town & Cuntry St. Blvd, Suite 500
Houston, Texas 77024
Office: (713) 497-5114
Fax: 281-416-5080
Email: info@source2load.com
www.source2load.com

STATE OF TEXAS
CHAD X. SLATER, SR.
107743
LICENSED PROFESSIONAL ENGINEER

09/29/24

Project		Catalog #		Type	
Prepared by		Notes		Date	

Invue

ClearCurve Pedestrian

Pedestrian Luminaire

Product Features

BAA

Product Certifications

ISTI DesignLights Consortium · IP66 · cULus Certified · 5 YEAR

Interactive Menu

- Ordering Information page 2
- Product Specifications page 3
- Energy and Performance Data page 3
- Control Options page 8

Quick Facts

- Available with Visual Comfort or Discrete optics configurations
- Lumen packages from 1,600 to over 14,000 lumens (18W to 110W)
- Efficacy up to 157 lumens per watt
- Standard quick mount arm with universal drill pattern
- Available with internal battery for emergency lighting

Connected Systems

- WaveLinx PRO Wireless

Dimensional Details

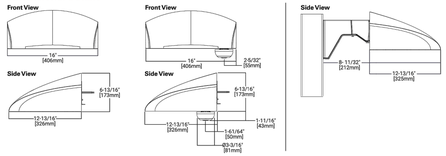

NOTES:
1. Visit https://www.designlights.org/search/ to confirm qualification. Not all product variations are DLC qualified.

Invue

ClearCurve Pedestrian

Ordering Information

SAMPLE NUMBER: **CCP-VA4-740-U-T4W-GM**

Product Family [1]	Light Engine: Visual Comfort Configurations	Color Temperature	Voltage	Distribution	Finish
CCP–ClearCurve Pedestrian **SAS-CCP**–ClearCurve Pedestrian Short Arm Accessory **TAA-CCP**–ClearCurve Pedestrian Tree Arm Accessory Ach Compliant [2]	**VA1**–Wavestream, 2,800 lumens **VA2**–Wavestream, 3,600 lumens **VA3**–Wavestream, 4,500 lumens **VA4**–Wavestream, 6,000 lumens **VA5**–Wavestream, 8,000 lumens [3] **VA6**–Wavestream, 10,000 lumens [3]	**727**=727CRI, 2700K **730**=730CRI, 3000K **735**=735CRI, 3500K **740**=740CRI, 4000K **750**=750CRI, 5000K **760**=760CRI, 6000K	**U**=Universal, 120-277V **1**=120V **2**=208V **3**=240V **4**=277V **8**=480V [4] **9**=347V	**T1**=Type I [5] **T2**=Type II **T3**=Type III **T4FT**=Type IV Forward Throw **T4W**=Type IV Wide **SWD**=Type V Square Wide **SMD**=Type V Square Medium **SNR**=Type V Square Narrow **SL2**=Type II w/Spill Control [6] **SL3**=Type III w/Spill Control [6] **SL4**=Type IV w/Spill Control [6] **RW**=Rectangular Wide Type I **AFL**=Automotive Frontline **SL1**=90° Spill Light Eliminator Left [6] **SL0**=90° Spill Light Eliminator Right [6]	**AP**=Gray **BZ**=Bronze **BK**=Black **DP**=Dark Platinum **GM**=Graphite Metallic **WH**=White

Discrete Configurations	Drive Current
SA1=1 Light Square **SA2**=2 Light Squares	**A**=350mA **B**=450mA **C**=530mA **D**=650mA **E**=1050mA **F**=1200mA [7]

Options (Add as Suffix)

F = Single Fuse (120V, 277V or 347V; Must Specify Voltage)
FF = Double Fuse (208, 240, or 480V; Must Specify Voltage)
10MSP = 10kV MOV Surge Protective Device
20MSP = 20kV MOV Surge Protective Device
20K = 20kV, 1kAR Level Surge Protective Device
2L = Two Circuits [8,9]
L90 = Optics Rotated 90° Left [9]
R90 = Optics Rotated 90° Right [9]
HA = 50°C High Ambient Temperature [9]
HA+ = 55°C High Ambient Temperature [9]
TR = Tamper Resistant Hardware
SF = Single Fuse Construction [9]
SALI = SALI Driver
BPC = Button Type Photocontrol [9]
PR = NEMA 3-PIN Twistlock Photocontrol Receptacle [9]
PR7 = NEMA 7-PIN Twistlock Photocontrol Receptacle [9]
A10DIM = 10kV MOV Surge + 0-10V Dimming
A20DIM = After Hours Dim, 3 Hours [9]
AH2DIM = After Hours Dim, 7 Hours [9]
MSDIM = Motion Sensor for Dimming [9]
MSDIM-LO = Motion Sensor for Dimming Operation, Up to 8' Mounting Height [9, 10]
MSDIM-LO+ = Motion Sensor for Dimming Operation, 8'- 20' Mounting Height [9, 10]
SPIR = Motion Sensor for Dimming Operation, BLE Interface, Up to 8' Mounting Height [9, 11]
SPIR2 = Motion Sensor for Dimming Operation, BLE Interface, 8'- 20' Mounting Height [9, 11]
WPIR = WaveLinx Pro, SR Driver, Dimming Motion and Daylight, MAC Programmable, 7'- 15' Mounting [9, 11, 12] replace XX with sensor color (WH, BZ or BK)
WPI4PX = WaveLinx Pro, SR Driver, Dimming Motion and Daylight, MAC Programmable, 15' - 40' Mounting [9, 11, 12] replace XX with sensor color (WH, BZ or BK)
FADC = Field Adjustable Dimming Control [9]
X = No surge protector

EMERGENCY OPTIONS (choose only one)
CBP = Cold Weather Emergency Battery Pack (Ambient Temp. 0° to 40°C) [13, 14, 15, 16]
CBP+ = Cold Weather Emergency Battery Pack (Ambient Temp. -20° to 40°C) [13, 14, 15, 16]
CBP-CEC = Cold Weather Emergency Battery Pack, CEC Compliant (Ambient Temp. -20° to 40°C) [13, 14, 15, 16]
ITE = Internal Transfer Switch, UL Recognized Component [13, 15]

NOTES:
1. DesignLights Consortium® Qualified. Refer to www.designlights.org Qualified Products List under Family Models for details.
2. Only available with Type IV Wide (T4W) distribution.
3. Not available with U Light Source (SAU).
4. Only for use with 480V Wye systems. Per NEC, not for use with ungrounded systems, impedance grounded systems or corner grounded systems (commonly known as Three Phase Three Wire Delta, Three Phase High Leg Delta and Three Phase Corner Grounded Delta systems).
5. Not available with Visual Comfort Light Engines (VAx).
6. Not available with U Light Source (SAUx).
7. Not available with other emergency options (EBP, CBP, CBP-CEC, or ITE).
8. Universal (120-277V), 10W, or 277V only.
9. Light Source trim plate will be painted Black when HSS option is selected.
10. Not available with VA4 or SA2E Light Engine. Not available with emergency options (EBP, CBP, or CBP-CEC). Not available with AWB (amber leds)
11. Light Square configuration only. The finish is tested per ASTM B117. Scribe rating of 7 per ASTM D1654.
12. For voltages above 277V, must specify voltage. Cannot select voltage range 9 or C.
13. Not available with VA6 or SA2E Light Engines.
14. If 347-480V (9) or 277-480V (C) voltage is specified, use a photosensitol that matches the input voltage used (either 277V, 347V, or 480V).
15. Requires the use of photocontrol (BPC). See After Hours Dim supplemental guide for additional information.
16. Utilizes the Wattstopper sensor FSP-311. Sensor color white unless specified otherwise via FSK.
17. Utilizes the Wattstopper sensor FSP-341. Sensor color determined by product finish. See reference table.
18. Sensor passive infrared (PIR) may be overly sensitive when operating below -20°C (-4°F).
19. In order for the device to be field-configurable, requires WAC Gateway components WAC-PoE and WPOE-120 in appropriate quantities. Only compatible with WaveLinx system and software and requires system components to be installed for operation. See website for more WaveLinx application information.
20. Not available with Back Box.
21. Must order one per Light Square when ordering as a field-installable accessory (1 or 2).
22. This tool enables adjustment to Motion Sensor (MS) parameters including high and low modes, sensitivity, time delay, cutoff and more. Consult your lighting representative for more information.
23. Requires 7-PIN NEMA twistlock photocontrol receptacle (PR7) option. The WSLC-7 cannot be used in conjunction with other controls systems (MS). Only for use at 120-347V.
24. Use for wildlife and observatories (Narrow-band 590nm +/- 5nm). Choose drive current B for SA1 or SA2. Choose lumen package VA2 for T2, T3, and T4FT, choose VA3 for T4W. Not available with 2L option.
25. Not available with DAL, PR7, MLTDM, SPR1, SPR2, WPX (any sensors or network dimming control devices).
26. Battery systems are UL924 Listed
27. Product configurations with these designated prefixes are built to be compliant with the Buy American Act of 1933 (BAA) or Trade Agreements Act of 1979 (TAA), respectively. Please refer to DOMESTIC PREFERENCES website for more information. Components shipped separately may be separately analyzed under domestic preference requirements.

Accessories (Order Separately)

GA/BA1013 = Photocontrol Shorting Cap
GA/BA1014 = NEMA Photocontrol - 120V
GA/BA1016 = NEMA Photocontrol - Multi-Tap 105-285V
GA/BA1017 = NEMA Photocontrol - 347V
GA/BA1027 = NEMA Photocontrol - 480V
WMEX = Wireguard for qty "A" Lightsquares [1]
SS1CCEX = Back Box with 3/4 NPT (replace XX with color selection)
SS-BPCCCEX = Back Box with 3/4 NPT and button PC (replace XX with color selection) [17, 18]
SS-PR7CCEX = Back Box for PR7
FSIR-100 = Wireless Configuration Tool for Motion Sensor [22]
WCLC-7P-10A = WaveLinx Outdoor Control Module (7-PIN) [23]
SS-PR7CCEX-SMBU = Back Box with 3/4" NPT and Weerline enabled 4-PIN Twistlock Receptacle (replace XX with color selection)
SS-FADCCCEX = Field Adjustable Dimming Control (replace XX with color selection) [20]
POLE-BT-60-XX = Pole Mount Arm (replace XX with color selection to match fixture)

Invue

ClearCurve Pedestrian

Product Specifications

Construction
- Low copper content, die-cast aluminum housing provides a clean smooth aesthetic
- Patent pending housing design
- IP66 rated
- 3G vibration rated

Optics
- Visual Comfort WaveStream TM technology or high-efficiency injection-molded AccuLED
- Comprehensive range of Color Temperature choices
- Visual Comfort - Four optical distributions utilizing patented visual comfort WaveStreamTM technology
- Visual Comfort - 6 lumen packages, ranging from 2,800 to 10,000 lumens
- AccuLED – 18 distributions including HSS shielding
- AccuLED – 11 lumen packages, ranging from 1,600 to 12,000 lumens
- AccuLED - Patented, high-efficiency injection molded AccuLED Optics technology

Electrical
- Approx. 90% lumen maintenance at 60,00 hours
- 120-277V 50/60Hz, 347V 60Hz or 480V 60Hz operation
- 10kV surge module standard
- 10MSP, 20MSP, 20kv and X are optional
- Standard with 0-10V dimming
- Suitable for operation in -40°C to 40°C ambient environment
- Optional 50°C high ambient (HA) configuration available

Mounting
- Versatile, patented standard quick mount arm accomodates drill patterns ranging from 1-1/2" to 4-7/8" (Type M drilling recommended for new installations)

Finish
- Finishes include white, black, bronze, gray, dark platinum and graphite metallic
- RAL and custom color matches available
- Super housing durable TGIC polyester powder coat paint, 2.5 mil nominal thickness
- Coastal Construction (CC) option available, providing 5,000 hour salt spray rating per ASTM B117, with a scribe rating of 9 per ASTM D1654

Warranty
- Five year limited warranty, consult website for details www.cooperlighting.com/legal

Approximate Fixture Weight
23.0 lbs

Mounting Data

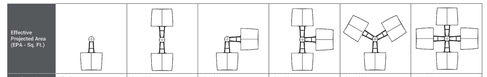

Invue

ClearCurve Pedestrian

Energy and Performance Data

Supplemental Performance Guide

VA Performance

Lumen Package	VA1	VA2	VA3	VA4	VA5	VA6
Power Wattage (Watts)*	28.5W	41W	49W	58.6W	78W	106W
Input Current (mA) @120V	240	340	406	493	676	933
Input Current (mA) @277V	105	148	175	221	285	388
Power Wattage (Watts)*	31.5W	44W	53.5W	65W	83W	115W
Input Current (mA) @347V	93	125	155	188	237	321
Input Current (mA) @480V	67	92	114	138	175	243

SA Performance

Supplemental Performance Guide

Lumen Package	SA1A (350mA)	SA1B (450mA)	SA1C (515mA)	SA1D (800mA)	SA1E (1050mA)	SA1F (1200mA)	SA2A (350mA)	SA2B (450mA)	SA2C (515mA)	SA2D (615mA)	SA2D (800mA)	SA2E (1050mA)
Power Wattage (Watts)*	18W	24W	32W	44W	59W	67W	37W	47W	64W	84W	111W	
Input Current (mA) @120V	150	200	270	370	490	564	320	400	538	700	925	
Input Current (mA) @277V	72	90	120	162	210	251	150	184	236	303	397	
Power Wattage (Watts)*	21W	26.5W	35W	47W	61.5W	72W	42W	53W	70W	89W	116W	
Input Current (mA) @347V	63	78	100	135	180	210	123	154	201	257	335	
Input Current (mA) @480V	45	57	75	99	131	153	90	113	147	188	245	

Lumen Multiplier

Ambient Temperature	Lumen Multiplier
0°C	1.02
10°C	1.01
25°C	1.00
40°C	0.99
50°C	0.97

Lumen Maintenance (TM-21)

Ambient Temperature	25,000 hours*	50,000 hours*	66,000 hours**	100,000 hours**	Theoretical L70 (Hours)**
25°C	94.4%	90.4%	89.0%	83.0%	>199,000
40°C	94.6%	90.9%	89.4%	83.9%	>212,000
50°C	91.8%	87.0%	85.2%	78.2%	>151,000

NOTES:
* Supported by IES TM-21 standards
** Theoretical values represent estimations commonly used; however, refer to the IES position on LED Product Lifetime Predictions, IES PS-10-19, that explains proper use of IESTM-21 and LM-80.

Invue

ClearCurve Pedestrian

Energy and Performance Data

VA Performance

Supplemental Performance Guide

CCT	Optics		VA1	VA2	VA3	VA4	VA5	VA6
730	T2 (Type II)	Lumens	2,709	3,627	4,290	5,519	--	--
		Lumens per Watt	90.9	90	89	85	--	--
		BUG Rating	B2-U0-G2	B2-U0-G2	B2-U0-G2	B2-U0-G3	--	--
	T3 (Type III)	Lumens	2,765	3,701	4,377	5,631	--	--
		Lumens per Watt	92	90	90	87.2	--	--
		BUG Rating	B2-U0-G2	B2-U0-G2	B2-U0-G2	B2-U0-G3	--	--
	T4FT (Type IV Forward Throw)	Lumens	3,230	4,368	5,116	6,257	--	--
		Lumens per Watt	107	107	104	97	--	--
		BUG Rating	B1-U0-G1	B1-U0-G2	B1-U0-G2	B2-U0-G2	--	--
	T4W (Type IV Wide)	Lumens	3,122	4,254	5,049	6,140	7,720	9,785
		Lumens per Watt	108	109	108	107	104	96.8
		BUG Rating	B1-U0-G1	B2-U0-G2	B2-U0-G2	B2-U0-G2	B2-U0-G3	B2-U0-G3
740	T2 (Type II)	Lumens	2,794	3,741	4,424	5,692	--	--
		Lumens per Watt	93.8	92	92	88	--	--
		BUG Rating	B2-U0-G2	B2-U0-G2	B2-U0-G2	B2-U0-G3	--	--
	T3 (Type III)	Lumens	2,851	3,817	4,514	5,807	--	--
		Lumens per Watt	95	93	92	89.9	--	--
		BUG Rating	B2-U0-G2	B2-U0-G2	B2-U0-G2	B2-U0-G3	--	--
	T4FT (Type IV Forward Throw)	Lumens	3,332	4,505	5,276	6,453	--	--
		Lumens per Watt	110	111	108	99.9	--	--
		BUG Rating	B1-U0-G1	B1-U0-G2	B2-U0-G2	B2-U0-G2	--	--
	T4W (Type IV Wide)	Lumens	3,220	4,388	5,207	6,332	7,961	10,091
		Lumens per Watt	111	112	111	110	107	99.8
		BUG Rating	B1-U0-G1	B2-U0-G2	B2-U0-G2	B2-U0-G2	B2-U0-G3	B2-U0-G3

Invue

ClearCurve Pedestrian

Energy and Performance Data

SA Performance

Supplemental Performance Guide

CCT	Optics		SA1A (350mA)	SA1B (450mA)	SA1C (600mA)	SA1D (800 mA)	SA1E (1050mA)	SA1F (1200mA)	SA2A (350mA)	SA2B (450mA)	SA2C (600mA)	SA2D (800 mA)	SA2E (1050mA)
730	T1 (Type I)	Lumens	2,426	3,062	4,009	4,945	6,063	6,648	4,852	6,124	8,017	9,889	12,124
		Lumens per Watt	135	128	125	112	108	99	134	130	129	122	114
		BUG Rating	B1-U0-G1	B2-U0-G2	B2-U0-G2	B2-U0-G2	B3-U0-G3	B3-U0-G3	B3-U0-G2	B3-U0-G3	B3-U0-G3	B3-U0-G3	B3-U0-G3
	T2 (Type II)	Lumens	2,485	3,137	4,107	5,066	6,210	6,810	4,970	6,273	8,213	10,130	12,420
		Lumens per Watt	138	131	128	115	111	102	137	136	132	125	117
		BUG Rating	B1-U0-G1	B1-U0-G1	B1-U0-G1	B1-U0-G1	B1-U0-G2	B1-U0-G2	B1-U0-G1	B1-U0-G2	B2-U0-G2	B2-U0-G2	B2-U0-G2
	T2R (Type II Roadway)	Lumens	2,530	3,194	4,182	5,158	6,324	6,935	5,061	6,388	8,363	10,316	12,647
		Lumens per Watt	141	133	131	117	113	104	140	139	135	128	119
		BUG Rating	B1-U0-G1	B1-U0-G1	B1-U0-G1	B1-U0-G1	B1-U0-G1	B1-U0-G1	B1-U0-G1	B1-U0-G1	B1-U0-G1	B2-U0-G2	B2-U0-G2
	T3 (Type III)	Lumens	2,517	3,178	4,160	5,131	6,290	6,898	5,034	6,354	8,319	10,261	12,580
		Lumens per Watt	140	132	130	117	113	103	139	138	134	127	118
		BUG Rating	B1-U0-G1	B1-U0-G1	B1-U0-G1	B1-U0-G1	B1-U0-G2	B1-U0-G2	B1-U0-G1	B1-U0-G2	B2-U0-G2	B2-U0-G2	B2-U0-G2
	T3R (Type III Roadway)	Lumens	2,532	3,196	4,184	5,162	6,328	6,939	5,064	6,392	8,368	10,322	12,655
		Lumens per Watt	141	133	131	117	113	104	140	139	135	128	119
		BUG Rating	B1-U0-G1	B1-U0-G1	B1-U0-G1	B1-U0-G2	B1-U0-G2	B1-U0-G2	B1-U0-G2	B1-U0-G2	B1-U0-G2	B2-U0-G2	B2-U0-G2
	T4FT (Type IV Forward Throw)	Lumens	2,490	3,143	4,115	5,075	6,222	6,823	4,979	6,285	8,228	10,149	12,443
		Lumens per Watt	138	131	129	115	111	102	138	137	132	126	117
		BUG Rating	B1-U0-G1	B1-U0-G1	B1-U0-G2	B1-U0-G2	B1-U0-G2	B1-U0-G2	B1-U0-G2	B1-U0-G2	B2-U0-G3	B2-U0-G3	B2-U0-G3
	T4W (Type IV Wide)	Lumens	2,513	3,173	4,153	5,123	6,281	6,888	5,026	6,344	8,306	10,245	12,561
		Lumens per Watt	140	132	130	116	112	103	139	138	134	127	118
		BUG Rating	B1-U0-G1	B1-U0-G1	B1-U0-G2	B1-U0-G2	B1-U0-G2	B1-U0-G2	B1-U0-G2	B1-U0-G2	B2-U0-G2	B2-U0-G3	B2-U0-G3
	SWQ (Type V Square Wide)	Lumens	2,611	3,296	4,315	5,323	6,525	7,156	5,222	6,591	8,629	10,644	13,050
		Lumens per Watt	145	137	135	121	116	107	144	143	139	132	122
		BUG Rating	B2-U0-G1	B2-U0-G1	B3-U0-G1	B3-U0-G1	B3-U0-G2	B3-U0-G2	B3-U0-G1	B3-U0-G2	B3-U0-G2	B4-U0-G2	B4-U0-G2
	SMQ (Type V Square Medium)	Lumens	2,572	3,246	4,250	5,242	6,427	7,048	5,143	6,492	8,499	10,483	12,852
		Lumens per Watt	143	135	133	119	115	105	142	141	137	130	121
		BUG Rating	B2-U0-G0	B2-U0-G1	B2-U0-G1	B3-U0-G1	B3-U0-G1	B3-U0-G1	B3-U0-G1	B3-U0-G1	B3-U0-G2	B3-U0-G2	B4-U0-G2
	SNQ (Type V Square Narrow)	Lumens	2,592	3,273	4,284	5,285	6,479	7,105	5,185	6,544	8,568	10,568	12,956
		Lumens per Watt	144	136	134	120	115	106	143	142	138	131	122
		BUG Rating	B1-U0-G0	B1-U0-G0	B2-U0-G0	B2-U0-G1	B2-U0-G1	B2-U0-G1	B2-U0-G1	B2-U0-G1	B3-U0-G1	B3-U0-G1	B3-U0-G1
	SL2 (Type II w/Spill Control)	Lumens	2,466	3,112	4,075	5,026	6,162	6,757	4,931	6,224	8,148	10,051	12,322
		Lumens per Watt	137	130	127	114	110	101	136	135	131	124	116
		BUG Rating	B1-U0-G1	B1-U0-G1	B1-U0-G2	B1-U0-G2	B1-U0-G2	B1-U0-G2	B1-U0-G2	B1-U0-G2	B2-U0-G3	B2-U0-G3	B2-U0-G3
	SL3 (Type III w/Spill Control)	Lumens	2,463	3,109	4,071	5,021	6,156	6,751	4,926	6,218	8,141	10,041	12,311
		Lumens per Watt	137	130	127	114	110	101	136	135	131	124	115
		BUG Rating	B1-U0-G1	B1-U0-G1	B1-U0-G2	B1-U0-G2	B1-U0-G2	B1-U0-G2	B1-U0-G2	B1-U0-G2	B2-U0-G3	B2-U0-G3	B2-U0-G3
	SL4 (Type iv W/Spill Control)	Lumens	2,441	3,082	4,034	4,976	6,101	6,690	4,882	6,163	8,068	9,952	12,201
		Lumens per Watt	136	128	126	113	109	100	135	134	130	123	114
		BUG Rating	B0-U0-G1	B1-U0-G1	B1-U0-G2	B1-U0-G2	B1-U0-G2	B1-U0-G2	B1-U0-G2	B1-U0-G2	B1-U0-G2	B1-U0-G3	B1-U0-G3
	RW (Rectangular Wide Type I)	Lumens	2,534	3,199	4,188	5,166	6,333	6,945	5,068	6,397	8,375	10,331	12,668
		Lumens per Watt	141	133	131	117	113	104	140	139	135	128	119
		BUG Rating	B1-U0-G1	B2-U0-G2	B2-U0-G2	B2-U0-G2	B3-U0-G3	B3-U0-G3	B2-U0-G2	B3-U0-G3	B3-U0-G3	B3-U0-G3	B3-U0-G3
	AFL (Automotive Frontline)	Lumens	2,514	3,174	4,155	5,125	6,283	6,890	5,028	6,346	8,309	10,249	12,565
		Lumens per Watt	140	132	130	116	112	103	139	138	134	127	118
		BUG Rating	B1-U0-G1	B1-U0-G1	B1-U0-G1	B1-U0-G1	B1-U0-G1	B1-U0-G1	B1-U0-G1	B1-U0-G1	B1-U0-G1	B1-U0-G2	B2-U0-G2

Invue

ClearCurve Pedestrian

Energy and Performance Data

SA Performance

Supplemental Performance Guide

CCT	Optics		SA1A (350mA)	SA1B (450mA)	SA1C (600mA)	SA1D (800 mA)	SA1E (1050mA)	SA1F (1200mA)	SA2A (350mA)	SA2B (450mA)	SA2C (600mA)	SA2D (800 mA)	SA2E (1050mA)
740	T1 (Type I)	Lumens	2,664	3,363	4,403	5,431	6,658	7,301	5,328	6,725	8,804	10,860	13,315
		Lumens per Watt	148	140	138	123	119	109	147	146	142	134	125
		BUG Rating	B2-U0-G2	B2-U0-G2	B2-U0-G2	B3-U0-G3	B3-U0-G3	B3-U0-G3	B3-U0-G3	B3-U0-G3	B3-U0-G3	B3-U0-G3	B4-U0-G4
	T2 (Type II)	Lumens	2,729	3,445	4,510	5,563	6,820	7,479	5,458	6,889	9,019	11,125	13,639
		Lumens per Watt	152	144	141	126	122	112	151	150	145	138	128
		BUG Rating	B1-U0-G1	B1-U0-G1	B1-U0-G1	B1-U0-G2	B1-U0-G2	B1-U0-G2	B1-U0-G1	B1-U0-G2	B2-U0-G2	B2-U0-G2	B2-U0-G3
	T2R (Type II Roadway)	Lumens	2,779	3,508	4,592	5,665	6,945	7,616	5,558	7,015	9,184	11,328	13,889
		Lumens per Watt	154	146	144	129	124	114	154	153	148	140	130
		BUG Rating	B1-U0-G1	B1-U0-G1	B1-U0-G1	B1-U0-G1	B1-U0-G1	B1-U0-G1	B1-U0-G1	B1-U0-G1	B1-U0-G2	B2-U0-G2	B2-U0-G2
	T3 (Type III)	Lumens	2,764	3,489	4,568	5,635	6,908	7,576	5,528	6,978	9,135	11,269	13,815
		Lumens per Watt	154	145	143	128	123	113	153	152	147	139	130
		BUG Rating	B1-U0-G1	B1-U0-G1	B1-U0-G1	B1-U0-G2	B1-U0-G2	B1-U0-G2	B1-U0-G2	B1-U0-G2	B2-U0-G2	B2-U0-G2	B2-U0-G2
	T3R (Type III Roadway)	Lumens	2,781	3,510	4,595	5,668	6,949	7,620	5,561	7,019	9,190	11,335	13,897
		Lumens per Watt	154	146	144	129	124	114	154	153	148	140	130
		BUG Rating	B1-U0-G1	B1-U0-G1	B1-U0-G1	B1-U0-G2	B1-U0-G2	B1-U0-G2	B1-U0-G2	B1-U0-G2	B2-U0-G2	B2-U0-G2	B2-U0-G3
	T4FT (Type IV Forward Throw)	Lumens	2,734	3,451	4,518	5,573	6,833	7,493	5,468	6,902	9,036	11,146	13,665
		Lumens per Watt	152	144	141	127	122	112	151	150	145	138	128
		BUG Rating	B1-U0-G1	B1-U0-G1	B1-U0-G2	B1-U0-G2	B1-U0-G2	B1-U0-G2	B1-U0-G2	B2-U0-G3	B2-U0-G3	B2-U0-G3	B2-U0-G3
	T4W (Type IV Wide)	Lumens	2,760	3,484	4,561	5,626	6,897	7,564	5,520	6,967	9,121	11,251	13,794
		Lumens per Watt	153	145	143	128	123	113	152	151	147	139	129
		BUG Rating	B1-U0-G1	B1-U0-G1	B1-U0-G2	B1-U0-G2	B1-U0-G2	B2-U0-G2	B1-U0-G2	B2-U0-G3	B2-U0-G3	B2-U0-G3	B2-U0-G3
	SWQ (Type V Square Wide)	Lumens	2,867	3,620	4,739	5,845	7,166	7,858	5,735	7,238	9,476	11,689	14,331
		Lumens per Watt	159	151	148	133	128	117	158	157	153	145	134
		BUG Rating	B3-U0-G1	B3-U0-G1	B3-U0-G1	B3-U0-G1	B3-U0-G2	B3-U0-G2	B3-U0-G1	B3-U0-G2	B4-U0-G2	B4-U0-G2	B4-U0-G3
	SMQ (Type V Square Medium)	Lumens	2,824	3,565	4,667	5,757	7,057	7,739	5,648	7,129	9,333	11,512	14,114
		Lumens per Watt	157	149	146	131	126	115	156	155	150	142	132
		BUG Rating	B2-U0-G1	B2-U0-G1	B3-U0-G1	B3-U0-G1	B3-U0-G1	B3-U0-G1	B3-U0-G1	B3-U0-G1	B3-U0-G2	B4-U0-G2	B4-U0-G2
	SNQ (Type V Square Narrow)	Lumens	2,847	3,594	4,705	5,803	7,115	7,802	5,694	7,187	9,409	11,606	14,228
		Lumens per Watt	158	150	147	132	127	116	157	156	152	144	133
		BUG Rating	B1-U0-G0	B2-U0-G0	B2-U0-G1	B2-U0-G1	B2-U0-G1	B3-U0-G1	B2-U0-G1	B2-U0-G1	B3-U0-G1	B3-U0-G1	B3-U0-G2
	SL2 (Type II w/Spill Control)	Lumens	2,708	3,418	4,475	5,519	6,767	7,420	5,415	6,835	8,948	11,038	13,532
		Lumens per Watt	150	142	140	125	121	111	150	149	144	137	127
		BUG Rating	B1-U0-G1	B1-U0-G1	B1-U0-G2	B1-U0-G2	B1-U0-G2	B2-U0-G2	B2-U0-G2	B2-U0-G2	B2-U0-G3	B2-U0-G3	B2-U0-G3
	SL3 (Type III w/Spill Control)	Lumens	2,705	3,415	4,470	5,514	6,760	7,413	5,410	6,829	8,940	11,027	13,519
		Lumens per Watt	150	142	140	125	121	111	149	148	144	136	127
		BUG Rating	B1-U0-G1	B1

Project		Catalog #		Type	
Prepared by		Notes		Date	

Lumark AP

ASWP Adjustable Slim Wall Pack Series

Wall Mount Luminaire

Product Features

Selectable lumens · DesignLights Consortium® Qualified · DUSK-TO-DAWN · MARKETPRO Family Member

Interactive Menu

- Ordering Information page 2
- Product Specifications page 2
- Energy and Performance Data page 3

Product Certifications

cULus Certified · DLC Listed Premium · FCC Class A CAN ICES-005 · RoHS · IP65 · 5 Year

Quick Facts

- Selectable configurations available
- Lumen packages range from 2,100-10,200 lumens
- Replaces 155W-375W HID equivalent
- Efficacies up to 130 lumens per watt
- Energy and maintenance savings up to 89%
- Heat and impact resistant borosilicate glass lens

Dimensional Details

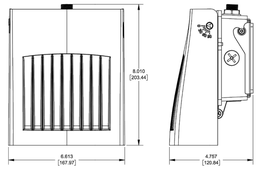

Ordering Information

Model Number [1]	Lumens / Wattage	Color Temperature	Voltage	Controls
ASWPLED1S=Small LED Wall Pack	Selectable Lumens: 2,000-4,000 / 15-20-24-30W	Selectable CCT: 3000,4000,5000K / 70CRI	120-347V, 50/60Hz	Selectable Dusk-to-Dawn via Button-type photocontrol
ASWPLED2S=Medium LED Wall Pack	Selectable Lumens: 5,000-10,000 / 40-50-60-75W	Selectable CCT: 3000,4000,5000K / 70CRI	120-347V, 50/60Hz	Selectable Dusk-to-Dawn via Button-type photocontrol

NOTES:
1. DesignLights Consortium® Qualified. Refer to www.designlights.org Qualified Products List under Family Models for details.

Product Specifications

Construction
- Die-cast aluminum housing with hinged, removable die-cast aluminum door
- Three 1/2" threaded conduit entry points
- Removable mounting plate for easy installation
- Cast-in angle indicators

Optics
- Impact and heat resistant borosilicate refractive glass lens

Electrical
- -40°C minimum operating temperature
- 40°C maximum operating temperature
- >.9 power factor
- <20% total harmonic distortion
- Class 2 driver incorporates internal fusing designed to withstand 3kV surge
- 0-10V dimming driver standard

Controls
- Selectable configurations supply internal toggle switches to adjust luminaire CCT and lumens. Selectable luminaires will ship default at 4000K CCT and maximum lumen output. Selectable configurations also provide an integrated button-type photocontrol for dusk-to-dawn operation. The photocontrol is also field-adjustable via toggle switches to either enable, disable, or modify the settings. The photocontrol ships default enabled.

Typical Applications
- Outdoor
- Parking Lots
- Walkways
- Building Areas

Finish
- Bronze

Shipping Data
- Unit Carton:
  - ASWPLED1S: 4.4 lbs.
  - ASWPLED2S: 9.1 lbs.
- Master Carton:
  - ASWPLED1S: 19.7 lbs. Qty 4
  - ASWPLED2S: 20.2 lbs. Qty 2

Energy and Performance Data

View WP IES files

Power and Lumens (ASWPLED1S Selectable)

Light Engine		Set to 15W	Set to 20W	Set to 24W	Set to 30W
Switch setting		3-ON	2-ON	1-ON	1,2,3-OFF
Power (Watts)		15	19.6	23.1	30.4
Input Current @ 120V (A)		0.13	0.16	0.19	0.25
Input Current @ 277V (A)		0.05	0.07	0.08	0.11
Input Current @ 347V (A)		0.04	0.06	0.07	0.09
Performance					
3000K	Lumens	2,083	2,569	2,964	3,733
	Lumens per Watt	138.9	131	128.3	122.8
4000K	Lumens	2,223	2,742	3,163	3,984
	Lumens per Watt	148.2	139.8	136.9	131.1
5000K	Lumens	2,154	2,657	3,065	3,860
	Lumens per Watt	143.6	135.4	132.6	127

CCT Multipliers

CCT	Multipliers
3000K	1.0000
4000K	1.0672
5000K	1.0340

Power and Lumens (ASWPLED2S Selectable)

Light Engine		Set to 40W	Set to 50W	Set to 60W	Set to 75W
Switch setting		3-ON	2-ON	1-ON	1,2,3-OFF
Power (Watts)		38.8	50.2	60.4	74.4
Input Current @ 120V (A)		0.32	0.42	0.50	0.62
Input Current @ 277V (A)		0.14	0.18	0.22	0.27
Input Current @ 347V (A)		0.16	0.21	0.25	0.31
Performance					
3000K	Lumens	5,492	6,916	8,086	9,575
	Lumens per Watt	141.5	137.7	133.9	128.7
4000K	Lumens	5,861	7,381	8,630	10,219
	Lumens per Watt	151	146.9	142.9	137.3
5000K	Lumens	5,679	7,151	8,361	9,900
	Lumens per Watt	146.3	142.4	138.5	133.1

Lumen Maintenance

Configuration	Ambient Temperature	TM-21 Lumen Maintenance (50,000 hrs)	Reported L70 (hrs)
Up to 30W	40°C	87.30%	>72,000
Up to 75W	40°C	86.90%	>72,000

Cooper Lighting Solutions
1121 Highway 74 South
Peachtree City, GA 30269
P: 770-486-4800
www.cooperlighting.com

© 2022 Cooper Lighting Solutions
All Rights Reserved.

Specifications and dimensions subject to change without notice.

REVISIONS

NO.	DESCRIPTION	DATE	BY
1	CITY COMMENT	9-28-24	CS
2			
3			

BATES ALLEN PARK
BLACK COWBOY MUSEUM
CHARLIE ROBERTS LANE

SCALE:

DATE: 9/14/2024

LIGHTING FIXTURE CATALOG

APPROVED BY: DATE:

PROJECT NO.

SHEET NO.

SE-5

SOURCE2LOAD

Source2Load Engineering and Consulting, LLC
"Powering Solutions"
TBPE Firm No. F-15125
800 Town & Cuntry St. Blvd, Suite 500
Houston, Texas 77024
Office: (713) 497-5114
Fax: 281-416-5080
Email: info@source2load.com
www.source2load.com

STATE OF TEXAS
CHAD X. SLATER, SR.
107743
LICENSED PROFESSIONAL ENGINEER

09/29/24

PLUMBING SPECIFICATIONS

THE WORK INCLUDES MODIFICATION TO THE EXISTING PLUMBING SYSTEM AND PROVIDING NEW MATERIALS, FITTINGS AND ACCESSORIES NECESSARY FOR A COMPLETE FUNCTIONING PLUMBING SYSTEM. THE WORK ALSO INCLUDES ROUGH-IN AND FINAL CONNECTIONS TO FOOD SERVICE EQUIPMENT AND BEVERAGE DISPENSING EQUIPMENT PROVIDED BY OTHERS. ALL WORK SHALL BE IN ACCORDANCE WITH LOCAL CODES AND/OR ORDINANCES AND IS SUBJECT TO INSPECTION.

HOOK-UP CHARGES, PERMITS AND ALL OTHER EXPENSES RELATED TO A COMPLETE AND FUNCTIONING PLUMBING SYSTEM ARE INCLUDED AS A PART OF THIS SECTION.

WARRANTY: PROVIDE LABOR AND MATERIALS TO REPAIR OR REPLACE DEFECTIVE PARTS AND MATERIALS AS REQUIRED FOR ONE YEAR AFTER SUBSTANTIAL COMPLETION OR OWNER ACCEPTANCE OF THE COMPLETED PROJECT. PROVIDE A SEPARATE LINE ITEM DEDUCT AMOUNT ON THE PROPOSAL FORM TO DELETE WARRANTY SERVICE, AT THE OWNER'S OPTION.

THE INTENT OF THE DRAWINGS IS TO INDICATE THE GENERAL EXTENT OF WORK REQUIRED FOR THE PROJECT. THE DRAWINGS FOR PLUMBING WORK ARE DIAGRAMMATIC, SHOWING THE GENERAL LOCATION, TYPE, FIXTURES AND EQUIPMENT REQUIRED. THE DRAWINGS SHALL NOT BE SCALED FOR EXACT MEASUREMENTS. REFER TO MANUFACTURER'S STANDARD ROUGH-IN DRAWINGS FOR PLUMBING FIXTURE INSTALLATION REQUIREMENTS. COMPLY WITH ALL APPLICABLE ADA INSTALLATION REQUIREMENTS.

COORDINATE WITH THE WORK OF OTHER SECTIONS, EQUIPMENT FURNISHED BY OTHERS, AND WITH THE CONSTRAINTS OF THE EXISTING CONDITIONS OF THE PROJECT SITE.

PIPING SYSTEMS - GENERAL: ALL PIPING SHALL BE RUN PARALLEL TO BUILDING LINES AND SUPPORTED AND ANCHORED AS REQUIRED TO FACILITATE EXPANSION AND CONTRACTION. ALL PIPING SHALL BE CONCEALED EXCEPT IN UNFINISHED SPACES. INSTALL AS REQUIRED TO MEET ALL CONSTRUCTION CONDITIONS AND TO ALLOW FOR INSTALLATION OF OTHER WORK SUCH AS DUCTS AND ELECTRICAL CONDUIT. AT ALL CONNECTIONS BETWEEN FERROUS PIPING AND NONFERROUS PIPING, PROVIDE AN ISOLATING DIALECTIC UNION. ALL HANGERS SHALL BE COMPATIBLE WITH PIPING MATERIAL TO PREVENT CORROSION.

PROVIDE ALL FITTINGS, ACCESSORIES, OFFSETS, AND MATERIALS NECESSARY TO FACILITATE THE PLUMBING SYSTEM'S FUNCTIONING AS INDICATED BY THE DESIGN AND THE EQUIPMENT INDICATED.

FIXTURES/EQUIPMENT FURNISHED BY OTHERS: PLUMBING CONTRACTOR SHALL PROVIDE UTILITY CONNECTIONS REQUIRED SUCH AS WATER, GAS, AIR, SUPPLIES, WASTE OUTLET, TRAPS, ETC. AT ALL PLUMBING TYPE FIXTURES OR EQUIPMENT FURNISHED BY OWNER, GENERAL CONTRACTOR, FOOD SERVICE CONTRACTOR, EQUIPMENT SUPPLIER, ETC., INCLUDED ARE STOP VALVES, ESCUTCHEONS, AND CHROME PLATED BRASS TUBING WITH COMPRESSION FITTINGS.

SEWER AND WASTE PIPING: PROVIDE ALL DRAINS AND SEWERS WITHIN THE SPACE WITH CONNECTION TO THE EXISTING DRAINAGE SYSTEMS ON-SITE. SANITARY DRAINAGE PIPING ABOVE FLOOR SHALL BE CO-EXTRUDED PVC DWV (SCHEDULE 40) PIPE, FITTINGS AND CONNECTIONS. SANITARY DRAINAGE PIPING BELOW GRADE SHALL BE CO-EXTRUDED PVC DWV (SCHEDULE 40) PIPE WITH SOLVENT WELD FITTINGS MAY BE USED (WHERE PERMITTED BY CODE/LOCAL AUTHORITIES). ALL DRAINAGE PIPING SHALL BE UNIFORMLY PITCHED, 1/4" PER FOOT UNLESS OTHERWISE REQUIRED BY EXISTING CONDITIONS, OR INDICATED ON THE DRAWINGS.

VENTS: PROVIDE A COMPLETE SYSTEM OF STANDARD WEIGHT CAST IRON NO-HUB VENT RISERS WHERE THE CEILING SPACE IS USED AS A RETURN AIR PLENUM OR USE CO-EXTRUDED PVC DWV (SCHEDULE 40) PIPE (WHERE PERMITTED BY CODE/LOCAL AUTHORITIES) WHERE THERE IS A DUCTED RETURN AIR SYSTEM. DO NOT USE PVC PIPE IN RETURN AIR PLENUM SPACES. THE VENT SYSTEM SHALL BE CARRIED THROUGH THE ROOF WITH APPROPRIATE FLASHING.

CONDENSATE AND INDIRECT DRAIN PIPING:PIPING ABOVE FLOOR SHALL BE CO-EXTRUDED PVC DWV (SCHEDULE 40) PIPE, FITTINGS AND CONNECTIONS. PIPING BELOW GRADE SHALL BE CO-EXTRUDED PVC DWV(SCHEDULE 40) PIPE WITH SOLVENT WELD FITTINGS.

CLEANOUTS: PROVIDE CLEANOUTS AT THE END OF EACH HORIZONTAL RUN, AND AT THE BASE OF ALL VERTICAL WASTE AND DRAIN PIPES. CLEANOUTS SHALL BE OF THE SAME SIZE AS THE PIPES THEY SERVE, CONFORMING TO CODE REQUIREMENTS. PROVIDE SUITABLE WALL OR FLOOR CLEANOUTS WITH ACCESSORIES TO OBSCURE FROM VIEW.

WATER DISTRIBUTION PIPING: LAYOUT WATER PIPING SO THAT THE ENTIRE SYSTEM CAN BE DRAINED. HOT AND COLD WATER PIPING SHALL BE 1/2" MIN. CPVC PIPE WITH SOLVENT FITTING. PROVIDE WATER HAMMER ARRESTERS AT EACH FIXTURE OR GROUP OF FIXTURES AS REQUIRED. INSTALL CHROME PLATED BRASS ESCUTCHEON PLATES AT ALL PENETRATIONS THROUGH FINISHED SURFACES (INCLUDING CABINET INTERIORS).

PIPE INSULATION: INSULATE (AS ALLOWED BY CODE) ALL LISTED SERVICE PIPING AS FOLLOWS. DOMESTIC COLD/HOT WATER, HOT WATER RETURN, STORM WATER PIPING. PROVIDE 1" PREFORMED FIBERGLASS, ASJ/SS-11, FLAME SPREAD 25, SMOKE DEVELOPED 50, ASTM C-547. FOR CONDENSATE PIPING PROVIDE 1/2" THICK INSULATION OF SAME CHARACTERISTICS AS LISTED FOR 1" ABOVE. WHERE PERMITTED BY LOCAL CODES, PROVIDE 1/2" SELF-ADHESIVE UNICELLULAR FOAM PIPE INSULATION WITH PRE-FORMED PVC FITTING COVERS - EQUAL TO SELF-ADHESIVE ARMSTRONG 2000 WITH K FACTOR OF 0.27 AT 75 DEGREES MEAN TEMPERATURE. INSULATE ANY EXPOSED CONDENSATE PIPING WITH WASTE TEMPERATURE BELOW 60 DEGREES F.

SHUTOFF VALVES, WITH UNIONS SHALL BE PROVIDED FOR SERVICE TO EACH PLUMBING FIXTURE, FOOD SERVICE EQUIPMENT ITEM OR OTHER EQUIPMENT ITEM, TO FACILITATE ISOLATION FOR REPAIR OR REPLACEMENT. VALVES SHALL BE EQUAL TO JENKINS #902-T BALL VALVE, CHROME-FINISHED BRONZE, TEFLON SEATS AND PACKING, 400 LB. W.O.G., SOLDER END.

ACCESS PANELS SHALL BE PROVIDED WHERE CONCEALED CONTROL DEVICES, VALVES, ETC. ARE CONCEALED WITHIN WALLS. WHERE ACCESS FOR ADJUSTMENT AND MAINTENANCE IS POSSIBLE THROUGH LAY-IN SUSPENDED CEILINGS, ACCESS PANELS ARE NOT REQUIRED.

PIPING SYSTEM- PVC SCHEDULE 40, SCHEDULE 80 AND CPVC PIPE WITH SOLVENT FITTINGS SHALL BE USED WHERE PEMITTED BY CODE/LOCAL AUTHORITIES.

INSTALLATION: THOROUGHLY CLEAN ITEMS BEFORE INSTALLATION. CAP PIPE OPENINGS TO EXCLUDE DIRT UNTIL FIXTURES ARE INSTALLED AND FINAL CONNECTIONS HAVE BEEN MADE. PROCEED AS RAPIDLY AS CONSTRUCTION WILL PERMIT. SET FIXTURES LEVEL AND IN PROPER ALIGNMENT. INSTALL SUPPLIES IN PROPER ALIGNMENT WITH FIXTURES. INSTALL SILICONE SEALANT BETWEEN FIXTURES AND ADJACENT MATERIAL, FOR SANITARY JOINT, AND OMIT ESCUTCHEONS.

REPAIR EXISTING PLUMBING SYSTEM COMPONENTS DAMAGED BY CONSTRUCTION OPERATIONS AND RESTORE TO ORIGINAL CONDITIONS.

TEST WATER SYSTEM UNDER 150 PSIG HYDROSTATIC PRESSURE, FOR FOUR (4) HOURS MINIMUM. WHEN TESTING INDICATES MATERIALS OR WORKMANSHIP IS DEFICIENT, REPLACE OR REPAIR AS REQUIRED, AND REPEAT TEST UNTIL STANDARDS ARE ACHIEVED.

ROOF PENETRATIONS SHALL COMPLY WITH "SMACNA" AND "NRCA" STANDARDS, AND WITH THE REQUIREMENTS OF THE EXISTING ROOFING WARRANTY, IF APPLICABLE. DO NOT PERFORM ROOFING PENETRATIONS IN A MANNER WHICH WOULD VOID OR OTHERWISE LIMIT THE EXISTING ROOFING WARRANTY.

GENERAL NOTES

1. THE INTENT OF THESE PLANS AND SPECIFICATIONS IS TO INCLUDE ALL LABOR, EQUIPMENT, MATERIALS, AND SERVICES NECESSARY TO FURNISH, INSTALL, TEST, AND ADJUST A COMPLETE WORKABLE PLUMBING INSTALLATION AS SHOWN, PRESCRIBED, OR REASONABLY IMPLIED BUT NOT LIMITED TO THAT EXPLICITLY INDICATED IN THE CONTRACT DOCUMENTS, BUT NECESSARY FOR THE PROPER EXECUTION AND COMPLETION OF THE INTENT THEREOF.

2. THE ENTIRE INSTALLATION SHALL CONFORM TO THE REQUIREMENTS OF ALL APPLICABLE CODES AND REGULATIONS REQUIRED BY AUTHORITIES HAVING JURISDICTION. IN THE EVENT OF CONFLICT BETWEEN SPECIFICATIONS, CODES, AND REGULATIONS, THE MORE RESTRICTIVE SHALL APPLY.

3. COORDINATE ENTIRE INSTALLATION OF THE PLUMBING SYSTEM WITH THE WORK OF OTHER TRADES PRIOR TO ANY FABRICATION OR INSTALLATION. FIELD VERIFY ALL DIMENSIONS AND CONDITIONS. REPORT ANY DISCREPANCIES, IN WRITING, TO THE ENGINEER PRIOR TO COMMENCEMENT OF WORK.

4. CONTRACTOR SHALL PROVIDE AS-BUILT DRAWINGS WITH ALL CHANGES NOTED THEREON AT THE COMPLETION OF THE PROJECT IN ACCORDANCE WITH THE SPECIFICATIONS.

5 PROVIDE ONE YEAR WARRANTY ON ALL PARTS AND LABOR.

6. THE DRAWINGS ARE DIAGRAMMATIC AND INTENDED TO SHOW SCOPE. CONTRACTOR SHALL COORDINATE HIS WORK WITH OTHER TRADES TO PROVIDE THE BEST ARRANGEMENT OF ALL DUCT, PIPE, CONDUIT, ETC.

7. ALL CUTTING AND PATCHING OF THE EXISTING STRUCTURE SHALL BE PROVIDED UNDER OTHER SECTIONS OF THE WORK. PROVIDE NECESSARY REQUIREMENTS TO THE PROJECT SUPERINTENDENT.

8. ALL HOT WATER PIPING AND RECIRCULATION PIPING (EXCEPT RUNOUTS 12 FT. OR SHORTER TO INDIVIDUAL FIXTURES) SHALL BE INSULATED TO MEET THE REQUIREMENTS OF THE 2006 INTERNATIONAL ENERGY CONSERVATION CODE

9. CONDENSATE DRAINS SHALL BE PROVIDED FOR EACH AIR CONDITIONING UNIT. HORIZONTAL CONDENSATE DRAINS ABOVE ANY CEILING SHALL BE INSULATED WITH MIN. 3/8" THICK CLOSED CELL INSULATION.

10. PIPING:
   A. WASTE, VENT, AND STORM DRAIN PIPING SHALL BE CO-EXTRUDED PVC SCHEDULE 40) PIPE
   B. WATER PIPE SHALL BE CPVC PIPE
   C. CONDENSATE PIPING SHALL BE CO-EXTRUDED PVC (SCHEDULE 40) PIPE
   D. INSIDE GAS PIPING SHALL BE BLACK IRON SCHEDULE 40 WITH MALLEABLE IRON FITTINGS. OUTSIDE SHALL BE GALVANIZED IRON SCHEDULE 40 WITH GALVANIZED FITTINGS. GAS LINE TO BE PAINTED GRAY IN COLOR. A 24 HOUR METERED GAS TEST SHALL BE REQUIRED.
   E. ALL PIPING NOT ENCLOSED IN CONDITION SPACE OR AT EXTERIOR WALLS SHALL BE INSULATED.
   F. PIPING: PVC SCHEDULE 40, SCHEDULE 80 AND CPVC PIPING WITH SOLVENT WELD FITTINGS SHALL BE USED WHERE PERMITTED BY CODE/LOCAL AUTHORITIES

11. ALL VENTS OR EXHAUSTS SHALL BE AT LEAST 10 FT. AWAY OR 3 FT. ABOVE ANY WINDOW, DOOR, OPENING, OR AIR INTAKE.

12. CLEANOUTS SHALL BE INSTALLED PER THE UNIFORM PLUMBING CODE.

13. PROVIDE WATER TIGHT FLASHINGS WHEREVER PIPES PASS THROUGH EXTERIOR WALLS, ROOFS, OR FLOORS.

14. PROVIDE ISOLATION FOR ALL PIPES THAT COME IN CONTACT WITH THE STRUCTURE.

15. LOCATION OF EXISTING UTILITIES AND POINTS OF CONNECTION ARE APPROXIMATE. CONTRACTOR SHALL VERIFY EXACT LOCATIONS AND DEPTHS OF EXISTING UTILITIES AND SERVICES PRIOR TO STARTING WORK OF THIS SECTION. IF INDICATED POINTS OF CONNECTION CANNOT BE MADE TO EXISTING UTILITIES AS FOUND, THE CONTRACTOR SHALL NOTIFY THE ENGINEER PRIOR TO INSTALLING ANY WORK WHICH MAY BE AFFECTED.

16. VALVES SHALL BE NIBCO, JENKINS, HAMMOND, RED & WHITE OR APPROVED EQUAL. SERVICE PRESSURE SHALL BE SUITABLE FOR SERVICE INTENDED. THE MAIN WATER SHUT OF VALVE SHALL BE A FULL PORT BALL TYPE AND APPROVED FOR SERVICE INTENDED.

17. CONTRACTOR SHALL PROVIDE ALL SHUT OFF VALVES AS NECESSARY TO ISOLATE ANY EQUIPMENT, PLUMBING ITEMS, OR FIXTURES, THAT MAY NEED SERVICING OR ARE SUBJECT TO FAILURE WHETHER OR NOT SUCH VALVES ARE SHOWN ON THE DRAWINGS.

18. PROVIDE HANGERS AND SUPPORTS AS REQUIRED. PLUMBERS TAPE AND WIRE ARE NOT ACCEPTABLE.

19. CONTRACTOR IS RESPONSIBLE FOR HIS OWN TRENCHING, BACKFILL, AND COMPACTION OF TRENCHES NECESSARY TO COMPLETE HIS SCOPE OF WORK. BACKFILLED TRENCHES SHALL BE RETURNED TO THEIR ORIGINAL GRADE UNLESS NOTED OTHERWISE.

20. CONTRACTOR SHALL AFFIX A MAINTENANCE LABEL TO ALL EQUIPMENT REQUIRING ROUTINE MAINTENANCE AND SHALL PROVIDE MAINTENANCE AND OPERATIONAL MANUALS IN ACCORDANCE WITH THE SPECIFICATIONS.

21. ALL EQUIPMENT THAT REQUIRES KEYS OR SPECIAL TOOLS TO OPERATE SHALL SUPPLY THE OWNER WITH TWO OF ANY SUCH KEYS OR TOOLS FOR EACH PIECE OF EQUIPMENT THAT REQUIRE THE SAME.

25. ANY CHANGE OR DEVIATION FROM THESE PLANS OR SPECIFICATIONS SHALL REQUIRE THE APPROVAL, IN WRITING, OF THE ENGINEER PRIOR TO COMMENCEMENT OF SUCH WORK.

26. ALL PLUMBING, ELECTRICAL, AND GAS LINES SHALL BE CONCEALED WITHIN THE THE BUILDING STRUCTURE TO AS GREAT EXTENT AS POSSIBLE. ALL LINES NOT CONCEALED SHALL BE SECURED 6" OFF THE FLOOR AND 3/4" FROM THE WALLS USING STANDOFF BRACKETS

27. AN APPROVED BACKFLOW PREVENTOR SHALL BE PROPERLY INSTALLED UPSTREAM OF ANY POTENTIAL HAZARD BETWEEN THE POTABLE WATER SUPPLY AND SOURCE OF COMTAMINATION.

28. WATER SUPPLY CARBONATORS SHALL BE PROTECTED BY AN APPROVED REDUCED PRESSURE PRINCIPLE BACKFLOW PREVENTOR. THE RELIEF VALVE SHALL DRAIN IN-DIRECTLY TO A FLOOR SINK WITH A 1" MIN. AIR GAP.

29. PEX PIPING SYSTEM IS ACCEPTABLE.

WATER HEATER SCHEDULE

MARK	MANUFACTURER/MODEL	QTY	GALLONS	AREA SERVED	ELECTRICAL	GAS (BTUH)
EWH-1	RHEEM PERFOMANCE 50GAL 4500WATT ELECTRIC TANK	1	50GAL	KITCHENS, RESTROOMS	240V, 1PH, 4.5kW	-

PLUMBING FIXTURE SCHEDULE

ITEM	FIXTURE	COLD WATER	HOT WATER	WASTE	TRAP	VENT	DESCRIPTION
WC-1	WATER CLOSET	3/4"	–	3"	INT.	2"	VITREOUS CHINA WITH ELONGATED BOWL, ZURN NO. Z5955SS-EL-STS SOLID PLASTIC OPEN FRONT SEAT 1.6 G.P.F. TOP HANDLE ON ACCESS DOE
LAV-1	LAVATORY	1/2"	1/2"	2"	1-1/2"	1-1/2"	CERISER WALL HUNG BACK OUTLET (ADA), MODEL C00235033, 1.28GPF, VITREOUS CHINA SIPHON JET. HYDROTEK MODEL H6B-128 SENSOR BATTERY POWERED), SLOW CLOSING PISTON FLUSHOMETER VALAVE. BEMIS ELONGATED TOILET SEAT WHITE MODEL 1955CT.
2-COMP	2 COMPARTMENT SINK	1/2"	1/2"	2"	1-1/2"	1-1/2"	EQUAL DOUBLE BOWL DROP-IN SINK 300 SERIES STAINLESS STEEL, SATIN FINISH, 22 GA. FAUCET WITH THERMOSTATIC MIXING VALVE 33743-PC GRID STRAINER, 20700 P-TRAP, 20800 TOP WITH FLEXIBLE SUPPLIES.
3-COMP	3 COMPARTMENT SINK	1/2"	1/2"	2"	1-1/2"	1-1/2"	Regency 10" x 14" x 10" 16-Gauge Stainless Steel Three Compartment Drop-In Sink with 10" Faucet
MS-1	MOP SINK	1/2"	1/2"	2"	1-1/2"	1-1/2"	FIAT PRODUCTS MODEL TSBCR1000, 12" DEPTH WITH 8" CURVED DROP FRONT WITH 12396B ALUMINUM BUMPERGUARD WITH VINYL INSERT, 8.30AA SERVICE BASIN FITTING, 8.333AA SILICONE SEALANT, 8.32AA HOOE AND HOSE BRACKET, MSG WALL GUARDS, 3" DRAIN WITH QUICK DRAIN CONNECTORS
HS-1	HAND SINK	1/2"	1/2"	2"	1-1/2"	1-1/2"	ELKAY LUSTERSTONE CLASSIC 17"X15"X7-1/8", 3-HOLE SINGLE BOWL, DROP IN SINK AND FAUCET KIT ADA COMPLIANT. FAUCET MODEL LKGA2421C, DRAIN MODEL LK35. PROVIDE ANGLE STOPS
TMV	MIXING VALVE	1/2"	1/2"	–	–	–	WATTS MODEL ZW070XL THERMOSTATIC MIXING VALVE, VALVE SHALL BE TEMPERED HOT WATER (90ºF-110ºF) AT POINT OF USE. BRONZE ASTM B 584 MAIN BODY. ASSE 1016 AND ASSE 1070 LISTED. CSA CERTIFIED. SEE PLAN FOR LOCATION.
SH-1	SHOWER	1/2"	1/2"	2"	1-1/2"	1-1/2"	KOHLER (ADA) POLISHED CHROME BANCROFT 2.5 GPM HAND SHOWER MODEL K-22163, K-9514 60" SHOWER HOSE, WALL MOUNTED SUPPLY ELBOW WITH CHECK VALVE MODEL K-22173, SLIDEBAR TRIM KIT MODEL K-340, MASTERSHOWER 3/4" TWO WAY TRANSFER VALVE MODEL K-720-K, RITE-TEMP SHOWER VALVE MODEL K-T13396-4, 30" ADJUSTABLE SLIDEBAR MODEL K-8524
UR-1	URINAL	1/2"	1/2"	2"	2"	2"	WALL HUNG VITREOUS CHINA, TOP SPUD, WITH ZURN NO. Z8003AM-EWS AQUAVANTAGE EXPOSED FLUSH VALVE WITH VACUUM BREAKER AND ZURN CONCEALED HANGERS 0.5 G.P.F.

PIPE MATERIAL SCHEDULE

SERVICE		COPPER TYPE "M"	COPPER TYPE "L"	COPPER TYPE "K"	CAST IRON	BLACK STEEL	GALV. STEEL	VTRI. CLAY	ABS	SCH.40 PVC	SCH.40 CPVC	REMARKS
WATER PIPING	INSIDE										X	
	OUTSIDE									X		
SANITARY DRAIN	INSIDE									X		
	OUTSIDE									X		
SANITARY VENT	INSIDE									X		
	OUTSIDE									X		
GAS PIPING	INSIDE					X						
	OUTSIDE						X					
STORM DRAIN	INSIDE									X		
	OUTSIDE									X		
INDIRECT DRAINAGE	INSIDE									X		
	OUTSIDE									X		
CONDESATE	INSIDE									X		
	OUTSIDE									X		
COMPRESSED AIR	INSIDE					X						
	OUTSIDE						X					

NOTES:

PLUMBING - FIXTURES UNITS

FIXTURE	TOTAL	WASTE DFU	WASTE TOTAL	WATER WSFU	WATER TOTAL
WATER CLOSET	10	4.0	40.0	4.0	40.0
LAVATORY	12	2.0	24.0	1.0	12.0
FLOOR DRAIN	14	2.0	28.0	–	–
HAND SINK	1	3.0	3.0	1.5	1.5
MOP SINK	1	3.0	3.0	1.5	1.5
URINAL	2	2.0	4.0	2.0	4.0
DISHWASHER	1	3.0	3.0	2.5	2.5
FRIDGE	1	–	–	1.0	1.0
2-COMP SINK	2	2.0	4.0	–	–
DRINKING FOUNTAIN	2	2.0	4.0	1.0	2.0
SHOWER	1	2.0	2.0	2.0	2.0
	TOTAL	–	115	–	66.5

SPECIAL NOTICE TO CONTRACTORS

1. ALL CONTRACTORS (GENERAL CONTRACTOR AND SUB-CONTRACTORS) BIDDING THIS PROJECT ARE REQUIRED TO VISIT THE JOB SITE AND VERIFY THE EXISTING CONDITIONS PRIOR TO SUBMITTING THEIR BID. CONTRACTORS ARE TO CAREFULLY REVIEW ALL CONSTRUCTION DOCUMENTS AND NOTE ANY DISCREPANCIES BETWEEN THE CONSTRUCTION DOCUMENTS AND THE CONDITIONS OBSERVED AT THE JOB SITE PRIOR TO SUBMISSION OF ANY BID. THE BUILDING OWNER REPRESENTATIVE LISTED BELOW MAY BE CONTACTED FOR ACCESS TO THE JOB SITE.

2. CONTRACTORS ARE RESPONSIBLE FOR VERIFYING THE LOCATION AND CONDITION OF ALL POINTS OF CONNECTION, LOCATION AND CONDITION OF ALL BUILDING (ROOF/FLOOR/CEILING) PENETRATIONS, LOCATION AND CONDITION OF ALL UTILITIES AND BUILDING SYSTEMS INCLUDING, BUT NOT LIMITED TO, GAS, WATER, SEWER, VENT, ELECTRICAL, BUILDING MECHANICAL SYSTEMS, DUCT CONNECTIONS, EXHAUST/OUTSIDE AIR CONNECTIONS, SECURITY, FIRE ALARM, DATA, AND PHONE PRIOR TO SUBMISSION OF THEIR BID.

3. ANY DISCREPANCIES BETWEEN THE CONSTRUCTION DOCUMENTS AND THE CONDITIONS OBSERVED SHALL BE BROUGHT TO THE ATTENTION, IN WRITING, TO THE ARCHITECT AND/OR ENGINEER PRIOR TO PROCEEDING WITH CONSTRUCTION.

RESPONSIBILITY NOTES

1. ROOF OPENINGS FOR PLUMBING AND RELATED WORK SHALL BE THE RESPONSIBILITY OF THE PLUMBING SUBCONTRACTOR. HE SHALL EMPLOY THE OWNER'S ROOFER FOR THIS WORK TO MAINTAIN THE ROOF BOND.
2. EXISTING SANITARY SEWER AND EXISTING DOMESTIC WATER CONNECTIONS REFER TO SHEET P.3.0 FOR LOCATIONS. CONTRACTOR TO FIELD VERIFY LOCATIONS AND TIE-ENDS
3. UNDER FLOOR PLUMBING ROUGH-IN FOR REST ROOMS SHALL BE THE RESPONSIBILITY OF THE SUBCONTRACTOR AND SLAB DEPRESSIONS.
4. THE SPRINKLER CONTRACTOR SHALL SURVEY THE EXISTING SPRINKER SYSTEM, ANY REQUIRED MODIFICATIONS SHALL BE BROUGHT UP TO CODE.
5. IF DRAWINGS CALL FOR THE REUSE OF EXISTING EQUIPMENT, THE OWNER'S GENERAL CONTRACTOR SHALL VERIFY THAT ALL SUCH EQUIPMENT IS IN PROPER WORKING ORDER, OR TAKE THE NECESSARY STEPS TO ACCOMPLISH SUCH. IF REPLACEMENT IS REQUIRED, USE THE EQUIPMENT AND HARDWARE AS SPECIFIED ON THESE SCHEDULES OR AS CALLED OUT IN THE SPECIFICATIONS ON THIS SHEET. ALL SUCH ITEMS MUST MEET ALL GOVERNING CODES AND STANDARDS OF PRACTICE.

PLUMBING LEGEND

SYMBOL	ABBREV	DESCRIPTION
	SS or W	NEW SEWER OR WASTE
	W (E)	EXIST. SEWER OR WASTE
	V	NEW VENT
	V (E)	EXIST. VENT
	CW	NEW COLD WATER
	CW (E)	EXISTING COLD WATER
	HW	NEW HOT WATER
	HW (E)	EXIST. HOT WATER
	G	NEW GAS
	G (E)	EXISTING GAS
	CD	NEW CONDENSATE DRAIN
	CD (E)	EXIST. CONDENSATE DRAIN
CA	CA	COMPRESSED AIR
	FCO	FLOOR CLEANOUT
HO	WCO	WALL CLEANOUT
FD	FD	FLOOR DRAIN
FS	FS	FLOOR SINK
	TP	TRAP PRIMER & TRAP PRIMER PIPING
	SOV	SHUT-OFF VALVE
	CV	CHECK VALVE
	PRV	BACKFLOW PREVENTER W SOV'S
T & P	T & P	
	DN	PIPE DOWN
	UP	PIPE UP
	POC	POINT OF CONNECTION
7	–	PLUMBING NOTE CALL-OUT
	ABV	ABOVE
	AFF	ABOVE FINISH FLOOR
	AP	ACCESS PANEL
	BEL	BELOW
	BLDG	BUILDING
	CLG	CEILING
	CONT	CONTINUATION
	EL	ELEVATION
	FIN	FINISH
	FL	FLOOR
	GR	GRADE
	NTS	NOT TO SCALE
	OC	ON CENTER
	S= %	SLOPE AT A PERCENTAGE
	SHT	SHEET
	TYP	TYPICAL
	VTR	VENT THRU ROOF

BUILDING CODES:

CITY OF EAST BERNARD CURRENT BUILDING CODES:

2018 International Building Code with amendments
2018 International Residential Code with amendments
2018 International Property Maintenance Code with amendments
2018 International Plumbing Code with amendments
2018 International Fuel Gas Code with amendments
2018 International Mechanical Code with amendments
2018 International Fire Code with amendments
2018 International Energy Code with amendments
2018 International Swimming Pool & Spa Code
2020 National Electrical Code with amendments

VCS architects
19251 Purus Dr.
Porter, TX 77365

CONSULTANTS

SOURCE2LOAD
Source2Load Engineering and Consulting, LLC
"Powering Solutions"
TBPE Firm No. F-15125
9337 Katy Freeway Suite B #282
Houston, Texas 77024
Office: (713) 497-5114
Fax: 281-416-5080
Email: info@source2load.com
www.source2load.com

BATES ALLEN PARK
BLACK COWBOY MUSEUM
630 CHARLIE ROBERTS LANE

STATE OF TEXAS
CHAD X. SLATER, SR.
107143
LICENSED PROFESSIONAL ENGINEER

09/23/24

Drawing Date: 06/03/2024
Drawn By: SMA
Checked By: DDV
Scale: AS NOTED

Revisions:

DESCRIPTION	
ISSUE FOR BID & CONSTRUCTION	09/23/2024

PLUMBING SPECIFICATIONS

Drawing Name

P.001

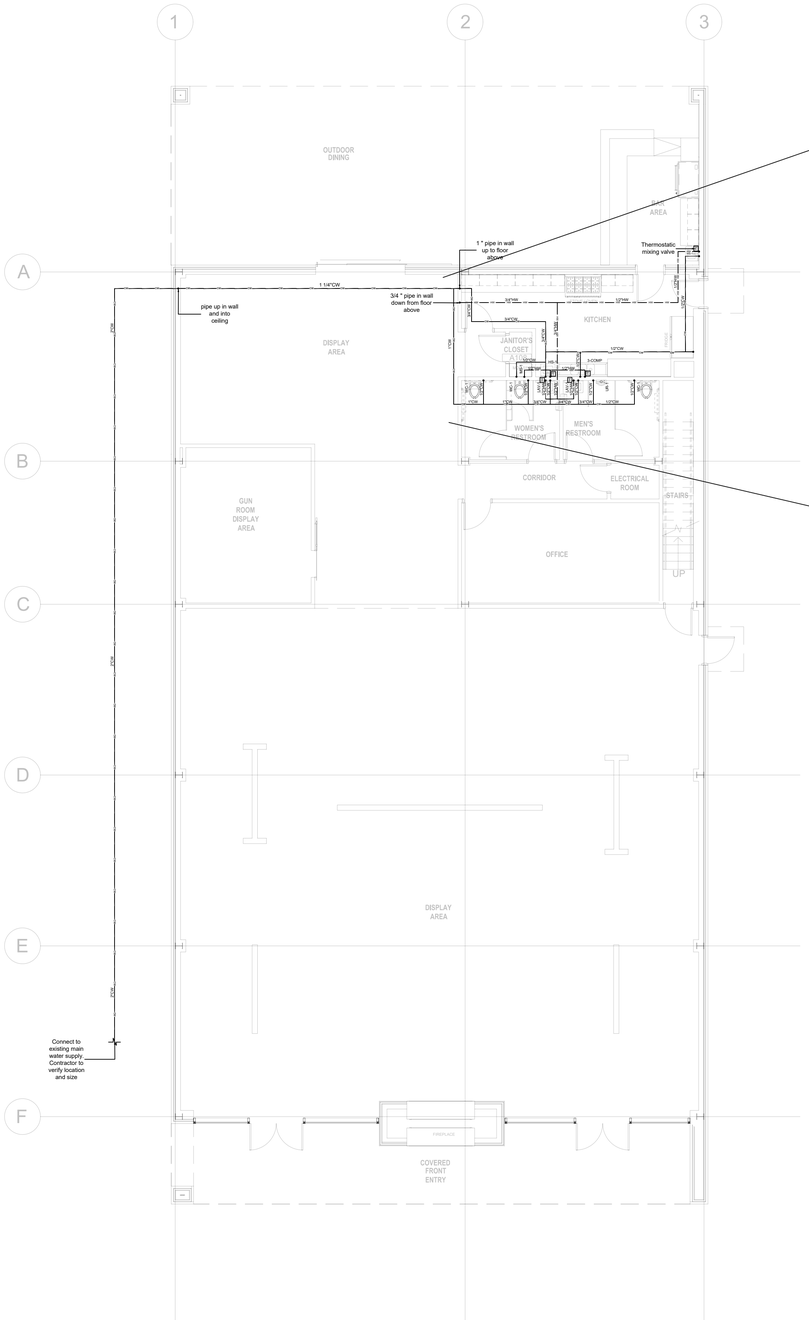

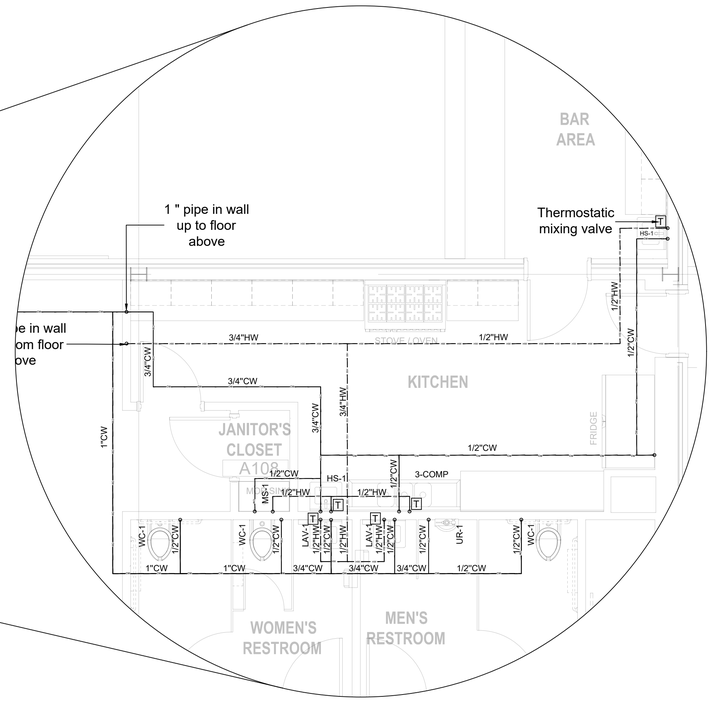

EXPLODED VIEW
Scale: 1/4" = 1'-0"

PLUMBING WATER PLAN - LEVEL 1
Scale: 1/8" = 1'-0"

VCS architects

19251 Purus Dr.
Porter, TX 77365

CONSULTANTS

SOURCE2LOAD
Source2Load Engineering and Consulting, LLC
"Powering Solutions"
TBPE Firm No. F-15125
9337 Katy Freeway Suite B #282
Houston, Texas 77024
Office: (713) 497-5114
Fax: 281-416-5080
Email: info@source2load.com
www.source2load.com

BATES ALLEN PARK
BLACK COWBOY MUSEUM
630 CHARLIE ROBERTS LANE

STATE OF TEXAS
CHAD X. SLATER, SR.
107748
LICENSED PROFESSIONAL ENGINEER

09/23/24

Drawing Date: 06/03/2024
Drawn By: SMA
Checked By: DDV
Scale: AS NOTED

Revisions:

DESCRIPTION	
ISSUE FOR BID & CONSTRUCTION	09/23/2024

PLUMBING WATER PLAN
LEVEL 1

Drawing Name

P.002

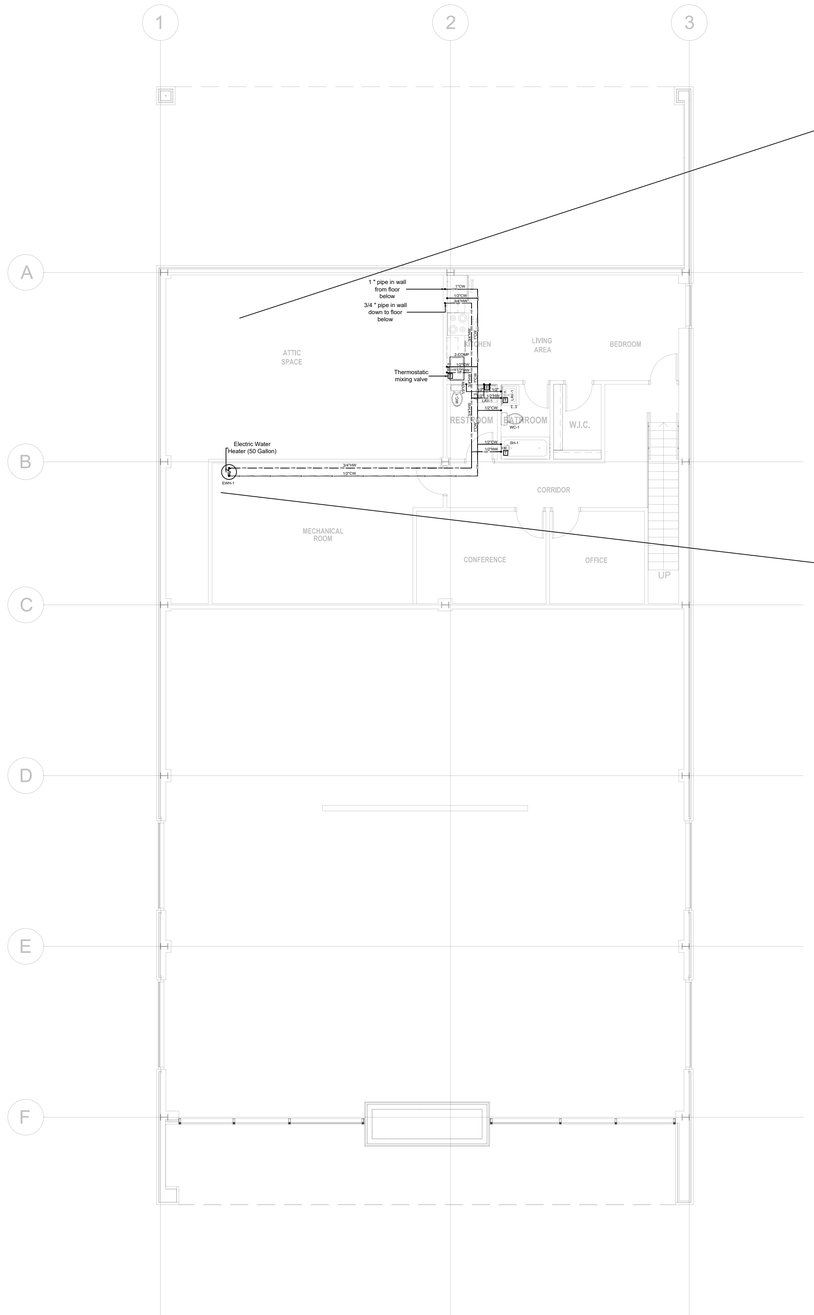

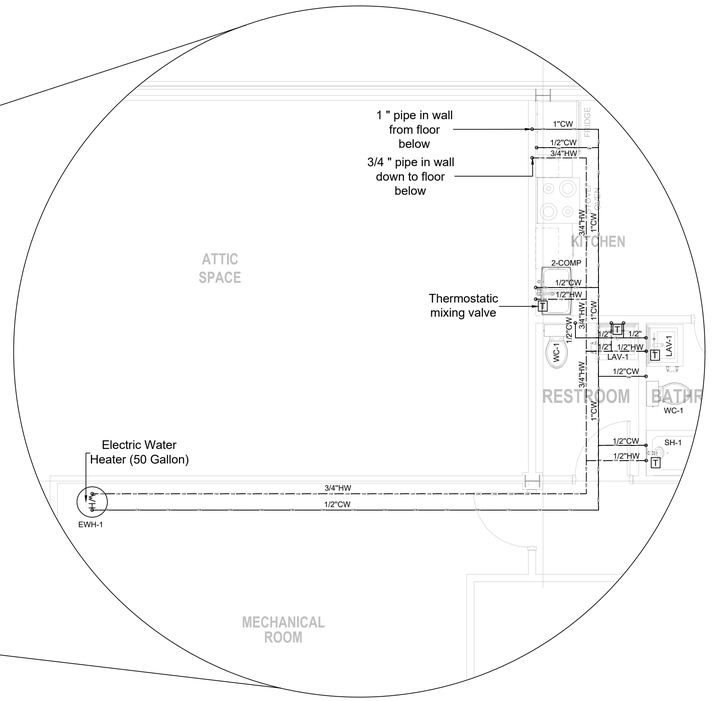

EXPLODED VIEW
Scale: 1/4" = 1'-0"

PLUMBING WATER PLAN - LEVEL 2
Scale: 1/8" = 1'-0"

VCS architects

19251 Purus Dr.
Porter, TX 77365

CONSULTANTS

SOURCE2LOAD
Source2Load Engineering and Consulting, LLC
"Powering Solutions"
TBPE Firm No. F-15125
9337 Katy Freeway Suite B #282
Houston, Texas 77024
Office: (713) 497-5114
Fax: 281-416-5080
Email: info@source2load.com
www.source2load.com

BATES ALLEN PARK
BLACK COWBOY MUSEUM
630 CHARLIE ROBERTS LANE

STATE OF TEXAS
CHAD X. SLATER, SR.
107743
LICENSED PROFESSIONAL ENGINEER

09/23/24

Drawing Date: 06/03/2024
Drawn By: SMA
Checked By: DDV
Scale: AS NOTED

Revisions:

DESCRIPTION	
ISSUE FOR BID & CONSTRUCTION	09/23/2024

PLUMBING WATER PLAN
LEVEL 2

Drawing Name

P.003

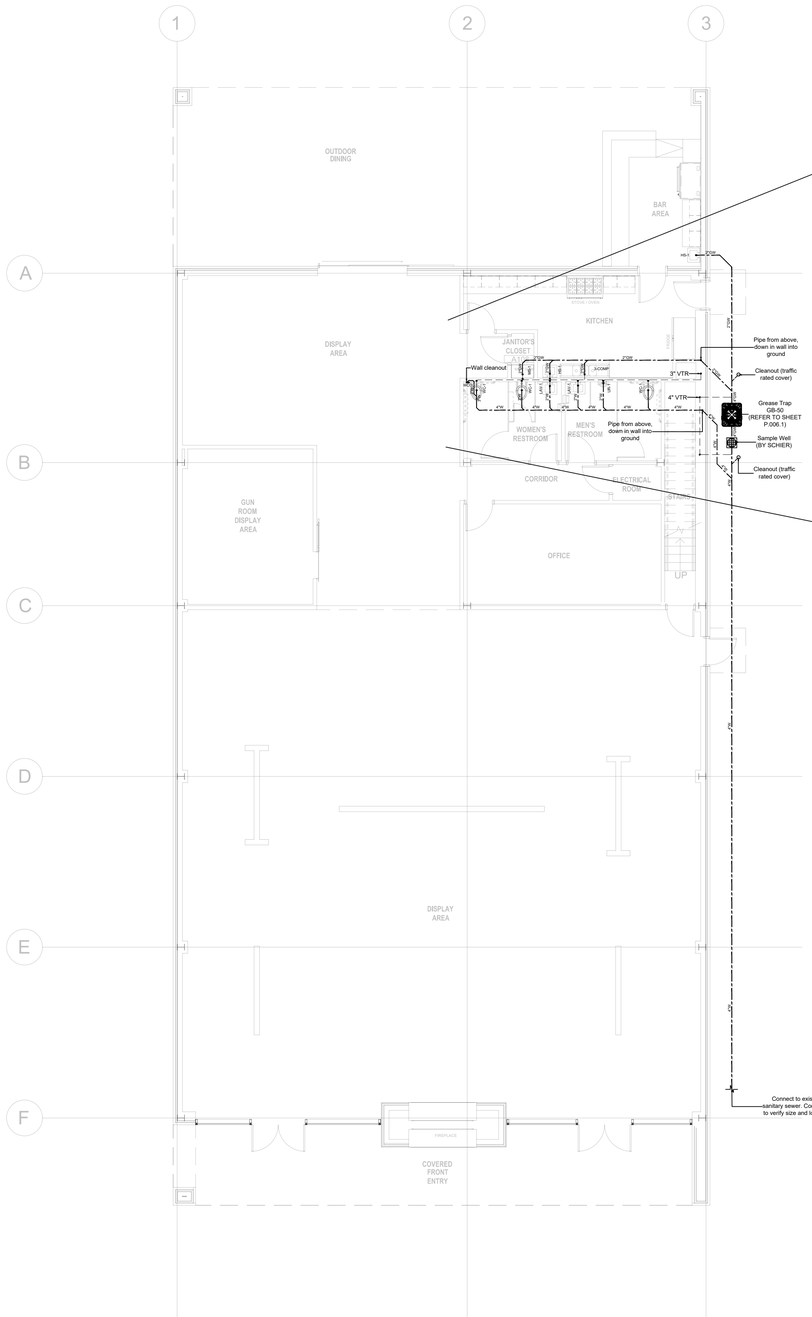

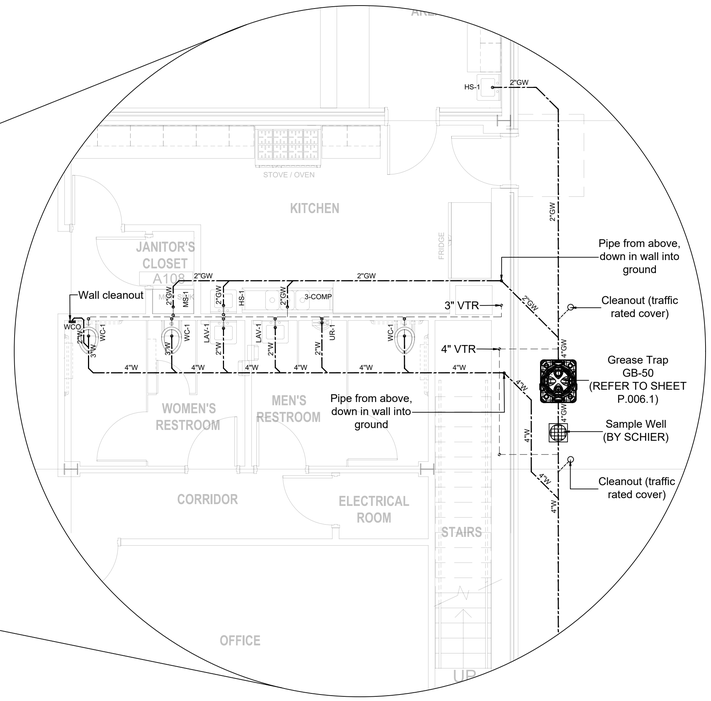

EXPLODED VIEW
Scale: 1/4" = 1'-0"

GREASE INTERCEPTOR CALCULATIONS

Reference No. 48481 — Project Name: Black Cowboy Museum

Step 1: Flow rate to grease interceptor
Fixture flow rate: (cu in / 231) = gal x 0.75 / 2 min = 2 min flow rate

NAME	TYPE	DIMENSIONS	QTY	CU IN	FLOW RATE
2COMP SINK	2 Compartment Sink	18" x 14" x 14" (2)	1	7,056	11.45 GPM
3COMP SINK	3 Compartment Sink	15" x 15" x 14" (3)	1	9,450	15.34 GPM
HAND SINK	Hand Sink	10" x 14" x 5"	2	1,400	2.26 GPM
MOP SINK	Mop Basin	18" x 24" x 10"	1	4,320	7.01 GPM
Total					**36.07 GPM**

Flow rate used to size interceptor (less of fixture or pipe size)
Pipe size (3 in):
Pipe Size flow rate per Manning's Formula **35 GPM**

Step 2: Grease Production
Servings per day x Grease production value x Days between pump-outs = Grease output

Number of meals served per day: 20
Grease production value: 0.035 lbs per serving (Don't Know Yet: High / No flatware)
Days between pump-outs: 90 days

20 x 0.035 x 90 = 63 lbs of FOG

SCHIER MODEL	
GB-50	**Description:** Polyethylene Grease Interceptor **Dimensions:** Length: 37", Width: 32.25", Height: 28.5" **Flow Rates/Grease Capacities:** 50 GPM / 439.5 lbs **Liquid Capacity:** 65 gal

PLUMBING SANITARY AND WASTE VENT PLAN - LEVEL 1
Scale: 1/8" = 1'-0"

architects
19251 Purus Dr.
Porter, TX 77365

CONSULTANTS

SOURCE2LOAD
Source2Load Engineering and Consulting, LLC
"Powering Solutions"
TBPE Firm No. F-15125
9337 Katy Freeway Suite B #282
Houston, Texas 77024
Office: (713) 497-5114
Fax: 281-416-5080
Email: info@source2load.com
www.source2load.com

STATE OF TEXAS
CHAD X. SLATER, SR.
107748
LICENSED PROFESSIONAL ENGINEER
09/23/24

Drawing Date: 06/03/2024
Drawn By: SMA
Checked By: DDV
Scale: AS NOTED

Revisions:

DESCRIPTION	
ISSUE FOR BID & CONSTRUCTION	09/23/2024

PLUMBING SANITARY & WASTE VENT LEVEL 1

Drawing Name

P.004

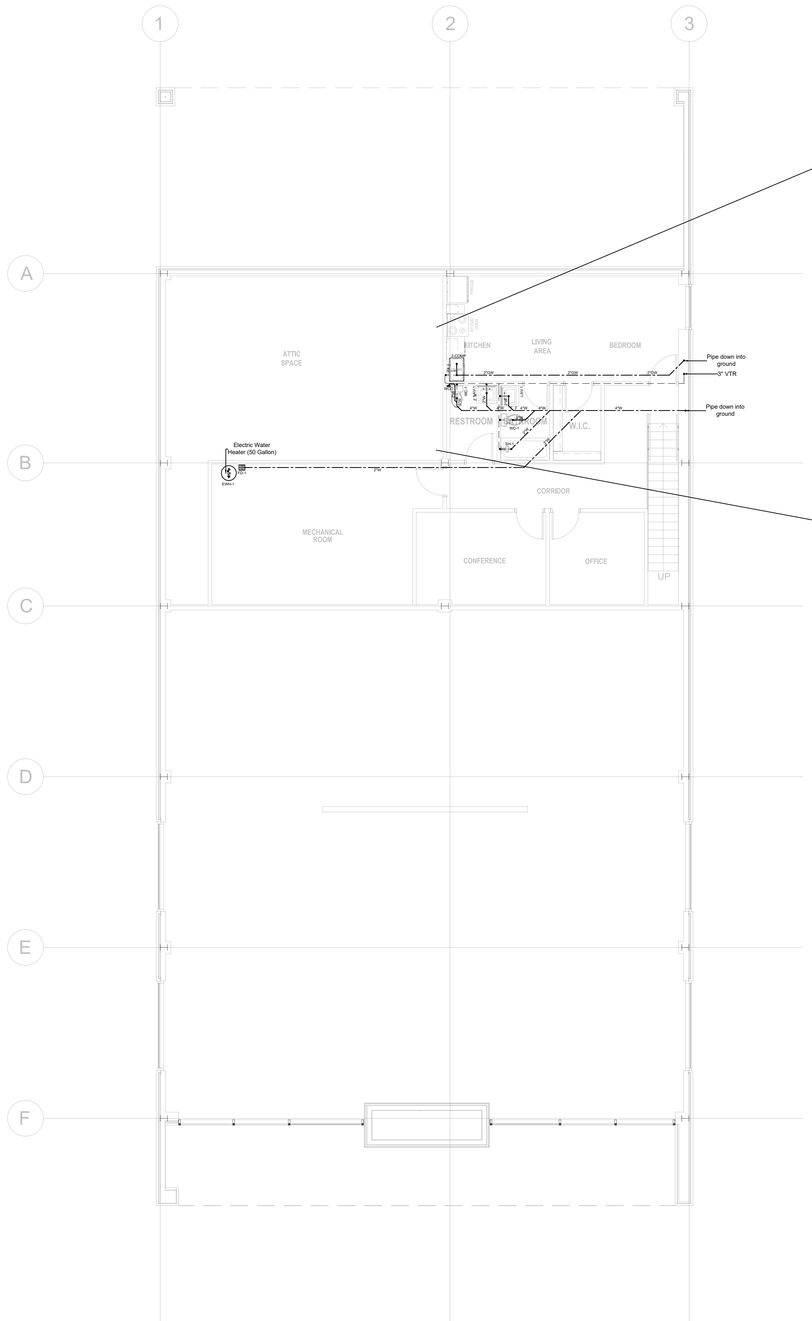

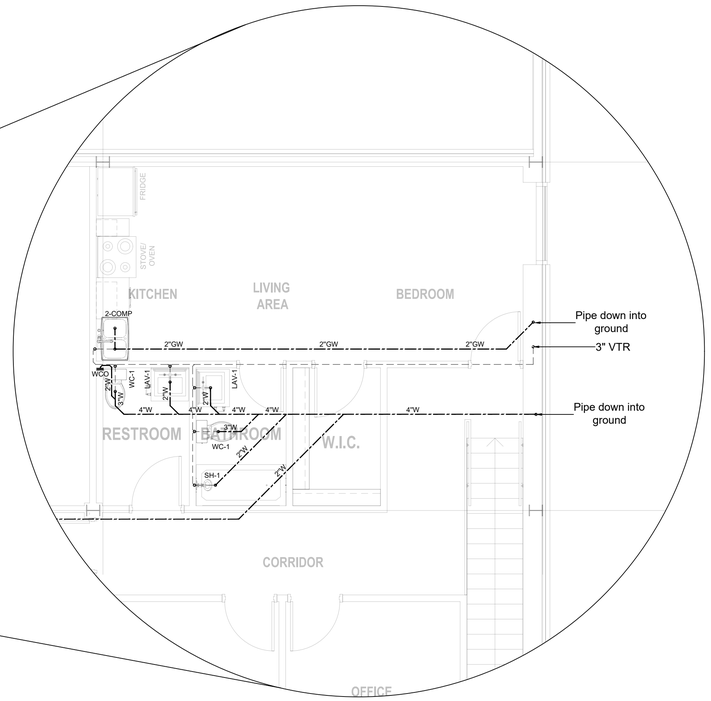

EXPLODED VIEW
Scale: 1/4" = 1'-0"

PLUMBING SANITARY AND WASTE VENT PLAN - LEVEL 2
Scale: 1/8" = 1'-0"

VCS architects

19251 Purus Dr.
Porter, TX 77365

CONSULTANTS

SOURCE2LOAD
Source2Load Engineering and Consulting, LLC
"Powering Solutions"
TBPE Firm No. F-15125
9337 Katy Freeway Suite B #282
Houston, Texas 77024
Office: (713) 497-5114
Fax: 281-416-5080
Email: info@source2load.com
www.source2load.com

BATES ALLEN PARK
BLACK COWBOY MUSEUM
630 CHARLIE ROBERTS LANE

STATE OF TEXAS
CHAD X. SLATER, SR.
107743
LICENSED PROFESSIONAL ENGINEER

09/23/24

Drawing Date: 06/03/2024
Drawn By: SMA
Checked By: DDV
Scale: AS NOTED

Revisions:

DESCRIPTION	
ISSUE FOR BID & CONSTRUCTION	09/23/2024

PLUMBING SANITARY & WASTE VENT LEVEL 2

Drawing Name

P.005

NOTE: PLUMBING CONTRACTOR TO DETERMINE EXACT NUMBER AND SIZES OF VENT PIPES (VTR) PENETRATING THE ROOF. COORDINATE LOCATIONS WITH ARCHITECT.

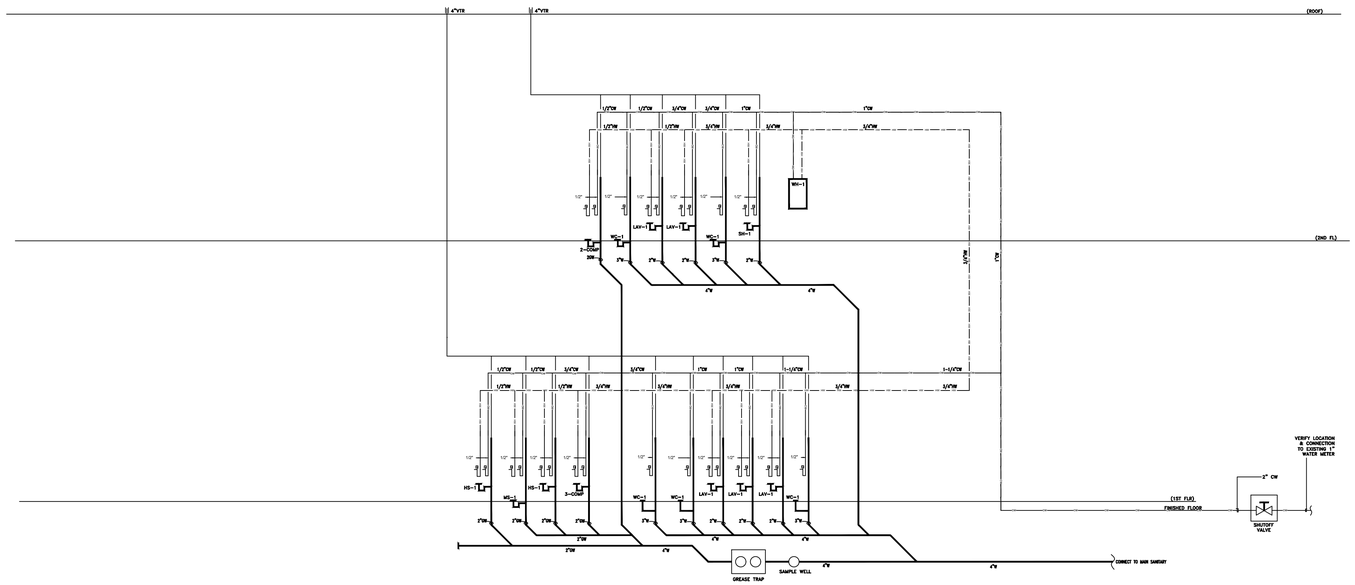

1 — PLUMBING WATER, SANITARY & VENT RISER DIAGRAM

NOT TO SCALE

architects

19251 Purus Dr.
Porter, TX 77365

CONSULTANTS

SOURCE2LOAD
Source2Load Engineering and Consulting, LLC
"Powering Solutions"
TBPE Firm No. F-15125
9337 Katy Freeway Suite B #282
Houston, Texas 77024
Office: (713) 497-5114
Fax: 281-416-5080
Email: info@source2load.com
www.source2load.com

BATES ALLEN PARK
BLACK COWBOY MUSEUM
630 CHARLIE ROBERTS LANE

STATE OF TEXAS
CHAD X. SLATER, SR.
107743
LICENSED PROFESSIONAL ENGINEER

09/23/24

Drawing Date: 06/03/2024
Drawn By: SMA
Checked By: DDV
Scale: AS NOTED

Revisions:

DESCRIPTION	
ISSUE FOR BID & CONSTRUCTION	09/23/2024

PLUMBING RISER DIAGRAM

Drawing Name

P.006

SPECIFICATIONS

Notes:

1. 4" FPT inlet/outlet with 4" plain end adapters, single inlet and triple outlet.
2. Unit weight - w/ cast iron cover: 148 lbs. (For wet weight add 542 lbs.)
3. Maximum operating temperature: 150º F continuous
4. Capacities - Liquid: 65 gal.;
   Grease: 439.5 lbs. (60 gal.) @50GPM
   Grease: 287.2 lbs. (43 gal.) @75GPM
   Solids: 13 gal.
5. For gravity drainage applications only.
6. Do not use for pressure applications.
7. Cover placement allows full access to tank for proper maintenance.
8. Vent not required unless per local code.
9. Engineered inlet and outlet diffusers with inspection ports are removable to inspect / clean piping.
10. Integral air relief / Anti-siphon / Sampling access.
11. Adjustable cover adapters provide up to 4" of additional height.
12. Designed for below-grade, above-grade, indoor or outdoor installations.
13. Safety Star®, access restrictor built into each cover adapter, prevents accidental entry to tanks (450 lb rating).

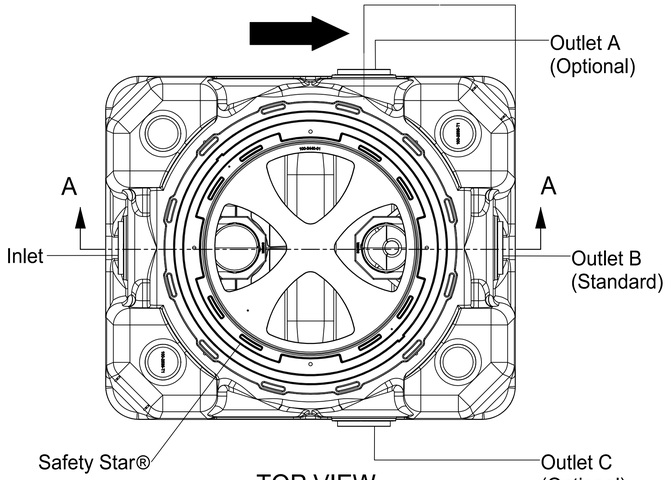

TOP VIEW
(COVER REMOVED FOR CLARITY)

ISOMETRIC VIEW

ENGINEER SPECIFICATION GUIDE

Schier Great Basin™ grease interceptor model # GB-50 shall be lifetime guaranteed and made in USA of seamless, rotationally-molded polyethylene with minimum 3/8" uniform wall thickness. Interceptor shall be furnished for above or below-grade installation with adjustable cover adapter and three outlet options. Interceptor shall be certified to ASME A112.14.3 (Type D) and CSA B481.1. Interceptor flow rate shall be 50 GPM or 75 GPM. Interceptor grease capacity shall be 439.5 lbs. Cover shall provide water/gas-tight seal and have minimum 16,000 lbs. load capacity.

CERTIFIED PERFORMANCE

Great Basin™ hydromechanical grease interceptors are third party performance-tested and listed by IAPMO to ASME #A112.14.3 and CSA B481.1 grease interceptor standards and greatly exceed requirements for grease separation and storage.
They are compliant to the Uniform Plumbing Code and the International Plumbing Code.

Type D certification does not require a flow control

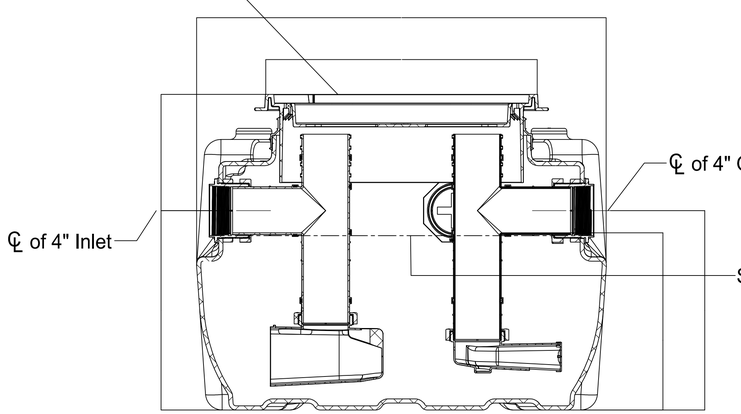

SECTION A-A

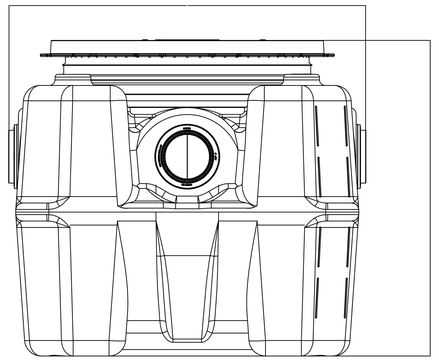

END VIEW

MODEL NUMBER:	PART NUMBER: 4025-009-01			
GB-50	DESCRIPTION: GB-50 GREASE INTERCEPTOR 50 GPM / 75 GPM, 4" INLET/OUTLET, H-20 RATED CAST IRON COVER			
	DWG BY: T.ASAY	DATE: 8/16/2022	REV: -	ECO: -

PROPRIETARY AND CONFIDENTIAL

THE INFORMATION CONTAINED IN THIS DRAWING IS THE SOLE PROPERTY OF **SCHIER PRODUCTS**. ANY REPRODUCTION IN PART OR AS A WHOLE WITHOUT THE WRITTEN PERMISSION OF **SCHIER PRODUCTS** IS PROHIBITED.

SCHIER

6455 Woodland Dr
Shawnee, KS 66218
Tel: 913-951-3300
Fax: 913-951-3399
schierproducts.com

VCS architects

19251 Purus Dr.
Porter, TX 77365

CONSULTANTS

SOURCE2LOAD
Source2Load Engineering and Consulting, LLC
"Powering Solutions"
TBPE Firm No. F-15125
9337 Katy Freeway Suite B #282
Houston, Texas 77024
Office: (713) 497-5114
Fax: 281-416-5080
Email: info@source2load.com
www.source2load.com

BATES ALLEN PARK
BLACK COWBOY MUSEUM
630 CHARLIE ROBERTS LANE

STATE OF TEXAS
CHAD X. SLATER, SR.
107143
LICENSED PROFESSIONAL ENGINEER

09/23/24

Drawing Date: 06/03/2024
Drawn By: SMA
Checked By: DDV
Scale: AS NOTED

Revisions:

DESCRIPTION	
ISSUE FOR BID & CONSTRUCTION	09/23/2024

GREASE TRAP DETAILS

Drawing Name

P.007.1

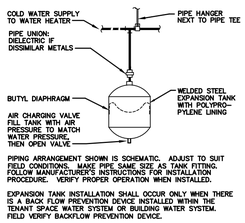

EXPANSION TANK NOT TO SCALE 1

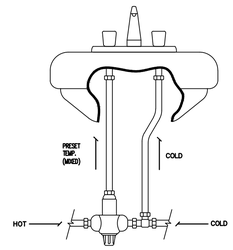

ANTI-SCALD MIXING VALVE NOT TO SCALE 2

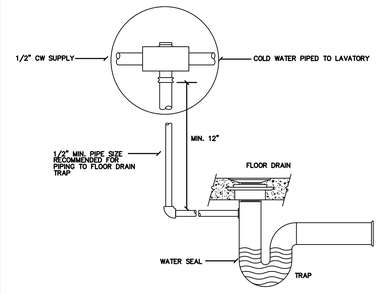

TRAP PRIMER NOT TO SCALE 3

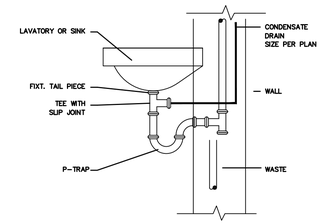

CONDENSATE TERMINATION NOT TO SCALE 4

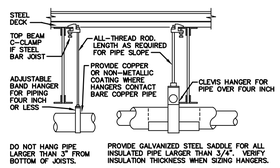

PROVIDE UPPER ATTACHMENT AS REQUIRED FOR CASES NOT SHOWN HERE. DO NOT INSTALL HANGER INSIDE INSULATION OR OTHERWISE PENETRATE VAPOR BARRIER. DO NOT HANG ONE PIPE FROM ANOTHER EXCEPT IN CHASES. TRAPEZE HANGERS MAY BE USED FOR MULTIPLE PARALLEL PIPES. HANGER SPACING FOR PIPE SIZE: COPPER: 4"=12' 3"=11' 2-1/2"=10' 2"=9' 1-1/2"=8' 1-1/4"=7' 1"=6' 3/4"=6' 1/2"=5'. CAST IRON: 10' AND ONE NEAR ALL JOINTS. STEEL: 4"=14' 3"=12' 2-1/2"=11' 2"=10' 1-1/2"=9' 1"=7' 3/4"=6' 1/2"=5'. LOCATE HANGERS AS CLOSE AS POSSIBLE TO TURNS AND TEES OF PIPE. PROVIDE SUPPLEMENTARY STEEL STRUTS BETWEEN JOISTS IF REQUIRED.LOCATE HANGERS TO TAKE LOAD OFF OF EQUIPMENT CONNECTIONS. ANCHOR WATER PIPE AGAINST SWAYING DUE TO CHANGES IN WATER VELOCITY. PROVIDE SEISMIC BRACING IF/AS REQUIRED BY LOCAL AUTHORITIES. CHAINS OR PERFORATED STRAP IRON OR STEEL IS NOT ACCEPTABLE. REFER TO CODES FOR FURTHER INFORMATION.

PIPE HANGER NOT TO SCALE 5

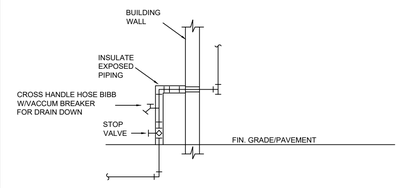

NOTE:
VERIFY REQUIREMENTS FOR METERING AND PIPING WITH WATER COMPANY. INSTALL OTHER UTILITIES A MINIMUM OF 10'-0" FROM WATER LINE. PLUMBING CONTRACTOR SHALL PAY ALL WATER COMPANY FEES FOR INSTALLATION. USE WELDED OR SCREWED PIPE AND FITTINGS PER PLUMBING SPECS. WATER COMPANY SHALL EXCAVATE, BACKFILL AND REPAIR ANY PAVING OR SOD FOR WATER SERVICE LINE INSTALLATION FROM MAIN TO BUILDING.

WATER SUPPLY BUILDING ENTRY NOT TO SCALE 6

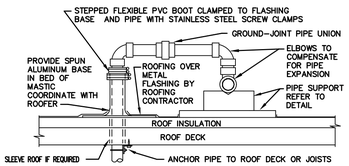

REFER TO PLANS FOR PIPE SIZE(S) AND LOCATION(S). USE WELDED OR SCREWED FITTINGS AS SPECIFIED FOR PIPE SIZE. LOCATE PENETRATION MINIMUM 18" FROM ADJACENT WALLS.

ROOF PENETRATION DETAIL NOT TO SCALE 7

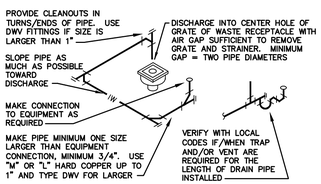

ROUTE PIPE INCONSPICUOUSLY AND UNOBTRUSIVELY. HANG PIPE AS REQUIRED. DO NOT INSULATE INDIRECT DRAIN PIPE WHEN INSTALLED EXPOSED IN FOOD SERVICE FACILITY. REFER TO LOCAL CODES FOR FURTHER INFORMATION.

INDIRECT DRAIN DETAIL NOT TO SCALE 8

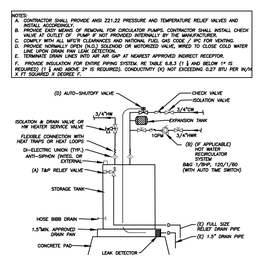

WATER HEATER DETAIL NOT TO SCALE 9

VCS architects
19251 Purus Dr.
Porter, TX 77365

CONSULTANTS

SOURCE2LOAD
Source2Load Engineering and Consulting, LLC
"Powering Solutions"
TBPE Firm No. F-15125
9337 Katy Freeway Suite B #282
Houston, Texas 77024
Office: (713) 497-5114
Fax: 281-416-5080
Email: info@source2load.com
www.source2load.com

BATES ALLEN PARK
BLACK COWBOY MUSEUM
630 CHARLIE ROBERTS LANE

STATE OF TEXAS
CHAD X. SLATER, SR.
107143
LICENSED
PROFESSIONAL ENGINEER
09/23/24

Drawing Date: 06/03/2024
Drawn By: SMA
Checked By: DDV
Scale: AS NOTED

Revisions:

DESCRIPTION	
ISSUE FOR BID & CONSTRUCTION	09/23/2024

PLUMBING DETAILS

Drawing Name

P.007

NOTES
1. 4" plain end inlet/outlet
2. Field modifiable to 6" plain end inlet/outlet
3. Unit weight - 9 lbs.
4. Maximum operating temperature: 150° F continuous
5. Offset connections
6. 2 rolls of 33" x 2" butyl mastic tape provided for sealing build-your-own riser joints

ENGINEER SPECIFICATION GUIDE
Schier Sewer Viewer™ sampling port model # SV10 shall be lifetime guaranteed and madein USA of seamless, rotationally-molded polyethylene. Sampling port shall be furnished for above or below grade installation. Cover shall provide water/gas-tight seal and have minimum 16,000 lbs. load capacity.

ACCESSORIES:
- Field Cut Risers for extending cover to grade

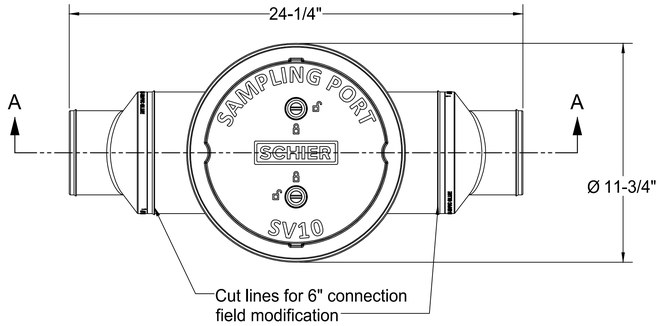

Top View

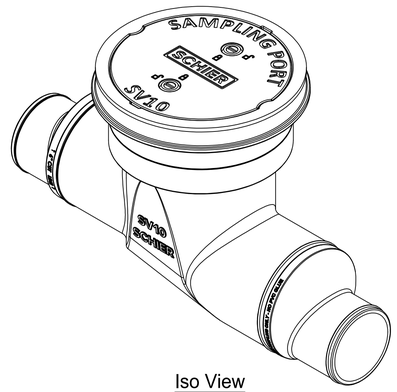

Iso View

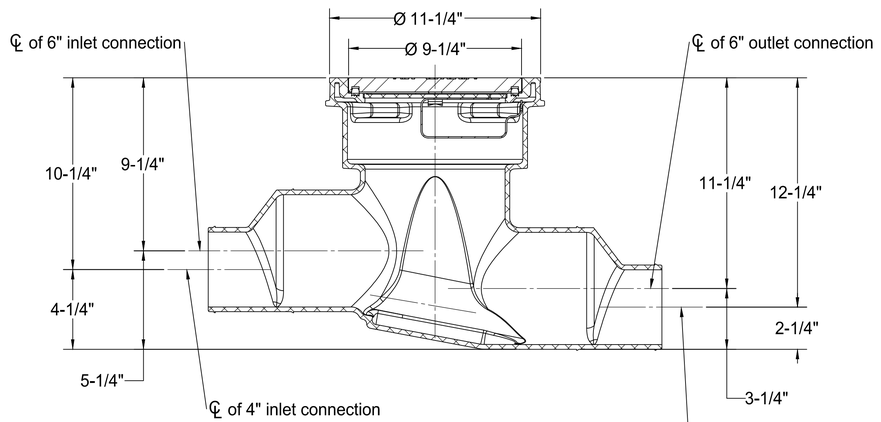

Section View A-A

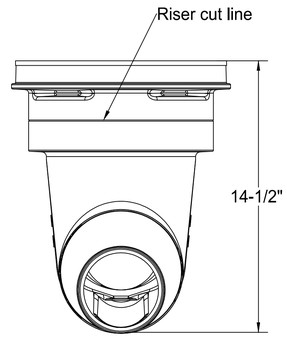

Outlet End View

MODEL NUMBER: SV10	**PART NUMBER:** 8065-001-01			
	DESCRIPTION: SV10 SEWER VIEWER SAMPLING PORT, 4" CONNECTIONS (FIELD MODIFIABLE TO 6"), POLYETHELENE COVER			
	DWG BY: B.BROWN	**DATE:** 6/6/2022	**REV:** -	**ECO:** -

PROPRIETARY AND CONFIDENTIAL
THE INFORMATION CONTAINED IN THIS DRAWING IS THE SOLE PROPERTY OF **SCHIER PRODUCTS**. ANY REPRODUCTION IN PART OR AS A WHOLE WITHOUT THE WRITTEN PERMISSION OF **SCHIER PRODUCTS** IS PROHIBITED.

6455 Woodland Dr
Shawnee, KS 66218
Tel: 913-951-3300
Fax: 913-951-3399
schierproducts.com

VCS architects
19251 Purus Dr.
Porter, TX 77365

CONSULTANTS
SOURCE2LOAD
Source2Load Engineering and Consulting, LLC
"Powering Solutions"
TBPE Firm No. F-15125
9337 Katy Freeway Suite B #282
Houston, Texas 77024
Office: (713) 497-5114
Fax: 281-416-5080
Email: info@source2load.com
www.source2load.com

STATE OF TEXAS
CHAD X. SLATER, SR.
107743
LICENSED PROFESSIONAL ENGINEER
09/23/24

Drawing Date: 06/03/2024
Drawn By: SMA
Checked By: DDV
Scale: AS NOTED

Revisions:

DESCRIPTION	
ISSUE FOR BID & CONSTRUCTION	09/23/2024

SAMPLE WELL DETAILS

Drawing Name

P.008.1

INSTALLATION GUIDE

GB-50 50/75 GPM Great Basin® Indoor/Outdoor Grease Interceptor

Contents

Special Precautions 2-3
Getting to Know the GB-50 4
Installation 5-10

SCHIER

LIFETIME GUARANTEED GREASE INTERCEPTORS

913-951-3300 | schierproducts.com

© Copyright 2023 Schier Products Company, 09/0123

SPECIAL PRECAUTIONS

For Schier Grease Interceptor Installations - Failure to follow this guidance voids your warranty

⚠ WARNING! DO NOT AIR TEST UNIT OR RISER SYSTEMS
Doing so may result in property damage, personal injury or death.

⚠ CAUTION Do not install this unit in any manner except as described in these instructions.

Installation Instructions
Installation instructions and additional components are included with the interceptor. Read all instructions prior to installation. This interceptor is intended to be installed by a licensed plumber in conformance with all local codes.

Install Interceptor as close as possible to fixtures being served

Provide at least 12" clearance above unit for routine maintenance.

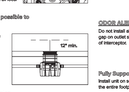

High Temperature Kitchen Water
If water is entering the interceptor at excessive temperature (over 150° F), a drain water tempering valve (DTV) and approved backflow prevention assembly must be installed. Most state and local plumbing codes prohibit water above 150° F being discharged into the sanitary sewer. Water above 150° F will weaken or deform PVC Schedule 40 pipe, poly drainage fixtures like interceptors and erode the coating of cast iron (leading to eventual failure).

ODOR ALERT!
Interceptor is not a sewer gas trap. All upstream fixtures must be trapped

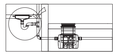

ODOR ALERT!
Do not install an gap on outlet side of interceptor.

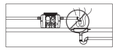

Fully Support Base of Unit:
Install unit on solid, level surface in contact with the entire footprint of unit base

When Installing Interceptor Inside
If your dishwasher has an air gap or high loop to prevent backflow of drainwater (drain), you may regulate the flow into the drain to avoid an overflow of water onto the kitchen floor. This can be done by installing a Fernco or similar flow restrictor cap on the sink piping that discharges into the drain. See drawing for guidance. For detailed guidance on trapped connections, go to: webtools.schierproducts.com/Technical_Data/Indirect_Connections.pdf

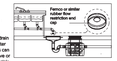

Support Inlet and Outlet Piping
For above ground installations ensure heavy lines are adequately supported. Cast iron or any solid is properly supported. Unsupported during the entire installation process to prevent connection failure or damage to bulkhead fittings.

SPECIAL PRECAUTIONS

For Schier Grease Interceptor Installations - Failure to follow this guidance voids your warranty

DO NOT USE CAST IRON COVERS IN ABOVE GRADE OR INDOOR INSTALLATIONS!
Use composite cover C24BC for above grade installations

DO NOT COMPACT BACKFILL MECHANICALLY
Compact by hand only

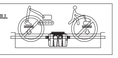

Secure Cover Adapters
Cover adapters must be secured to base unit in above grade installations with increased head pressure conditions. Use cover adapter tie-down kit model ATDI.

Suspended Installations
Design impeze to support the wet weight of the unit. Do not partially support unit or install unit using metal U-channel to create a trapeze.

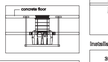

High Water Table Installations
Intercetors and risers are not designed to withstand water table height in excess of the top of the unit when buried (see figure). If it is possible for this to occur, install the interceptor and risers in a water-tight concrete vault or backfill with concrete or flowable fill (wet concrete) to the top of the unit. Units must be poured in stages to avoid crushing the interceptor). At risk areas include but are not limited to tidal surge areas, floodplains and areas that receive storm water. Great Basin® models that are direct buried in high water table scenarios must be installed with an anchor kit. Model GB-50 uses model AK1 anchor kit.

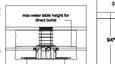

Hydrostatic/ Pressure Risks
When installed under a hydrostatic slab (slab designed to withstand upward lift, usually caused by hydrostatic pressure) interceptor must be enclosed in a watertight concrete vault.

Below Grade Installation Slab Requirements
A concrete slab to finished grade with rebar is required when installing interceptor below grade.

Installations with Risers

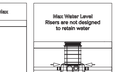

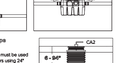

Corrugated Riser Pipe Requirements
Riser adapter model CA2 must be used when installing interceptors using 24" diameter corrugated pipe as a riser. This will adequately embed the cover adapter in the concrete slab, preventing cover/cover adapters failure under traffic rated loads.

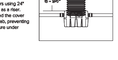

GETTING TO KNOW THE GB-50

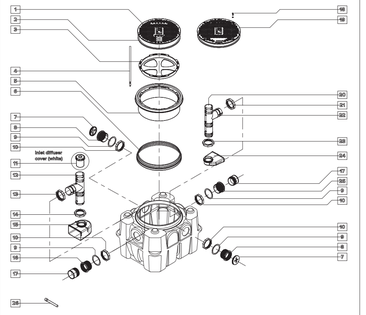

1. Pickable cast iron cover (standard)
2. Cover gasket
3. Safety Star® access restrictor
4. Safety Star® tether
5. Cover adapter
6. Cover adapter gasket assembly with upper and lower stainless steel band clamps
7. 4" cleanout plug (x2)
8. Outlet bulkhead connection (optional) 4" FPT (x2)
9. Bulkhead connection gasket
10. Bulkhead connection retaining nut
11. Inlet diffuser cover (white)
12. Inlet diffuser
13. Inlet diffuser retaining nut
14. Inlet diffuser foot retaining nut
15. Inlet diffuser (foot)
16. Inlet bulkhead connection 4" FPT
17. 4" plain end fitting (x2)
18. Composite cover bolts and washers (x4)
19. Bolted composite cover (optional)
20. Air relief/visual access
21. Outlet diffuser retaining nut
22. Outlet diffuser
23. Outlet diffuser foot retaining nut
24. Outlet diffuser (foot)
25. Outlet bulkhead connection (standard) 4" FPT
26. 7/16" nut driver bit

1 Test tank for water tightness

Cap all connection points with 4" cleanout plugs using pipe thread sealant or tape approved for use with plastics.

Remove covers. For base unit testing fill with water to just above the highest connection.

Inspect unit, connections and gaskets for leaks. Check water level at specific time intervals per local code.

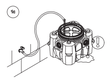

Have a Leak?
Call customer care at 913-951-3300
Hours 8am-5pm CST, M-F

2 Excavate Burial Pit (SHOP MADE) ONLY

Excavate hole at least 12" larger than interceptor on all sides and 6" deeper than tank bottom. Lay 4 level bed of well-packed, crushed aggregate (approximately 3/4" size rock or sand, with no fines) in the base of hole.

3 Set Up Outlet Diffuser and Install Cleanout Plugs

3a Choose outlet location.

Side Outlet: Go to Step 3b. OR Straight Through: Go to Step 3c.

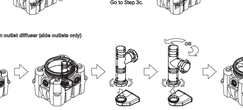

3b Reposition outlet diffuser (side outlets only)

Remove safety star insert, leave tethered to unit. Unscrew diffuser retaining nut and remove outlet diffuser. Unscrew diffuser foot retaining nut and remove outlet diffuser foot. Rotate diffuser toward chosen outlet, replace foot ensuring it will point to the bottom of the unit and hand tighten foot retaining nut. Insert diffuser into chosen outlet and hand tighten retaining nut.

3c Cap unused connection(s)(all configurations)

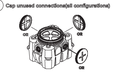

Screw in provided 4" cleanout plugs using pipe thread sealant or tape approved for use with plastics. Do not cap the Inlet or outlet connections attached to the diffusers.

4 Install Inlet Diffuser Components

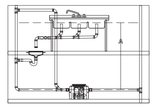

This unit is supplied with a white inlet diffuser cover to prevent the unit from swamping in high flow/ increased head pressure conditions.

- If dimension "A" is 13 feet or less, the inlet diffuser cover is not needed, go to Step 5, Connect Piping.
- If dimension "A" is more than 13 feet, or a high flow/increased head pressure condition exists, follow Steps below.

4a Install inlet diffuser cover

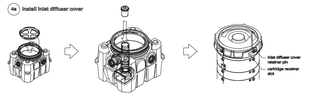

Remove Safety Star® insert and remove inlet diffuser cover from the parts bag. Slide inlet diffuser cover into top of inlet diffuser and rotate clockwise until cartridge drops onto inlet diffuser cover retainer pins. Continue rotating clockwise until pins are fully seated.

4b OPTIONAL: Install extension handle

For easy inlet diffuser cover removal in deep burial installations, 1/2" PVC SCH. 40 pipe may used as an extension handle. Before risers have been installed, cut pipe to length and attach to top of cover using PVC cement/primer. Extension handle length should be about 12" shorter than total riser height.

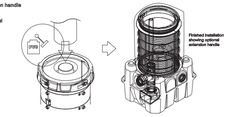

5 Connect Piping

5a Install plain end fittings

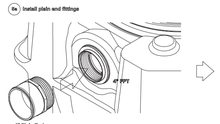

4" Plain End

Screw plain end fittings (included) into bulkhead fittings using pipe thread sealant or tape approved for use with plastics. 6" connection types come pre-installed from the factory.

5b Connect Interceptor to drain lines

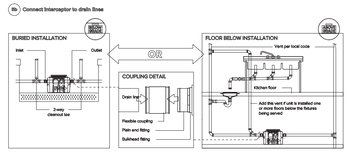

Place unit into final position and set level. Mechanically couple inlet and outlet drainage lines to unit. Do not sodvent weld. Ensure all upstream fixtures are trapped. Vent per local code. Installation of 2-way cleanout tees to grade (by others) is recommended for buried installations.

6 Wet or Air Test Piping Per Local Code

⚠ WARNING! DO NOT AIR TEST UNIT OR RISER SYSTEMS
Doing so may result in property damage, personal injury or death.

Have a Leak? Call customer care at 913-951-3300 Hours 8am-5pm CST, M-F

7 Bring Covers Flush-to-Grade (SHOP MADE) ONLY

The GB-50 is ready for burial depth of 28-1/2" from finished grade to bottom of tank (or 10-1/2" to centerline of inlet). Deeper burials will require extending the cover adapters and possibly adding risers.

7a Measure dimension 'X' to determine riser height needed.

Riser Height Needed	Risers Required
0" - 4"	None (use adapter)
>4" - 34"	FCR2 (x1)
>34" - 64"	FCR2 (x2)
>64" - 94"	FCR2 (x3)

7b Install risers if required

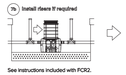

See instructions included with FCR2.

7c Make final cover adapter adjustments

Loosen the cover adapter upper band clamp using 7/16" nut driver bit. Adjust cover adapter heights as needed. Maintain a minimum 3-5/32" insertion depth. Tighten upper band clamp to 10 ft-lbs of torque using 7/16" nut driver bit. If required, cover adapters may now be tilted up to 10° in any direction using gasket flexibility.

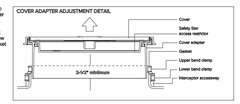

8 Install Anti-Flotation Anchor Kit (SHOP MADE) ONLY

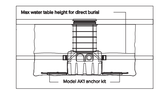

If the installation location is in a high water table or at risk area (including but not limited to tidal surge areas, floodplains and areas that receive storm water) the GB-50 must be installed with Schier model AK1 anchor kit.

9 Backfill and Finished Grade (SHOP MADE) ONLY

9a Backfill

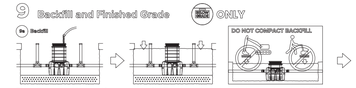

Fill unit with water for stabilization and float-out prevention. Backfill evenly around tank using crushed aggregate (approximately 3/4" size rock or sand with no fines)or flowable fill. Do not compact backfill around units.

9b Pour concrete slab to finished grade

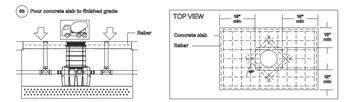

Vehicular Traffic Areas:
Minimum 8" thick concrete slab with rebar required. Thickness of concrete around covers to be determined by specifying engineer. If traffic loading is required the concrete slab dimensions shown are for guideline purposes only. Concrete to be 28 day compressive strength to 4,000 PSI. Use No. 4 rebar (ø 1/2") grade 60 rebar in a 12" grid with 4" spacing around access openings. Rebar to be 2-1/2" from edge of concrete and spaced in a 12" grid with 4" spacing around access openings.

Pedestrian Traffic or Greenspace Areas:
Minimum 4" thick concrete slab with rebar required.

VCS architects

19251 Purus Dr.
Porter, TX 77365

CONSULTANTS

SOURCE2LOAD
Source2Load Engineering and Consulting, LLC
"Powering Solutions"
TBPE Firm No. F-15125
9337 Katy Freeway Suite B #282
Houston, Texas 77024
Office: (713) 497-5114
Fax: 281-416-5080
Email: info@source2load.com
www.source2load.com

BATES ALLEN PARK
BLACK COWBOY MUSEUM
630 CHARLIE ROBERTS LANE

STATE OF TEXAS
CHAD X. SLATER, SR.
107749
LICENSED
PROFESSIONAL
ENGINEER

09/23/24

Drawing Date: 06/03/2024
Drawn By: SMA
Checked By: DDV
Scale: AS NOTED

Revisions:

DESCRIPTION	
ISSUE FOR BID & CONSTRUCTION	09/23/2024

GREASE TRAP DETAILS

Drawing Name

P.008

Model ZW1070XL

Aqua-Gard® Thermostatic Mixing Valve

Application

Ideal for use where Lead-Free* valves are required. The Zurn Wilkins Model ZW1070XL Aqua-Gard® Thermostatic mixing valve is designed to be installed at the point of use to assist in the prevention of scalding. The valve's extremely rapid response rate make it most suitable for installation at plumbing fixtures and appliances for the final control of water temperature. The ZW1070XL is ASSE 1070 listed for fixtures, sinks, lavatories or bathtubs and will mix hot and cold water from the distribution system to a final safer temperature of 95-115°F (35-46°C). Multiple end configurations make this valve suitable for all residential and commercial installations.

Standards Compliance

- ASSE® Listed 1070
- IAPMO® Listed
- CSA® Certified B125.70
- Meets the requirements of NSF/ANSI 61-9*

*(0.25% MAX. WEIGHTED AVERAGE LEAD CONTENT)

XL LEAD FREE NSF/ANSI 61-9

Materials

Body	Low Lead Cast Bronze, ASTM B 584 W/Chrome Plating ASTM B 456 Service Condition #2
Internal brass	Low Lead Brass, ASTM B 927, UNS C27450
Piston	Polysufone
Guide Tube	Noryl GFN2
Spring & Screen	300 Series Stainless Steel
Seals	Viton
Checks	Noryl GFN2

Features

Sizes:	3/8", 1/2", 3/4", 1"
Outlet Temp. Range	95-115°F max (35-46°C)
Temperature Hot Supply	120-195°F max. (49-90.5°C)
Temperature Cold Supply	39°F-80°F(3.8-26.6°C)
Set Temperature Accuracy	+/- 3°F(1.78°C)
Max. Working Pressure (inlet)	145 psi

Temperature must be field set
Max. Pressure Differential is 15 psi between Hot & Cold inlets
Flow rate @ 45 psi pressure loss 10 gpm
Min. Flow Rate 0.25 gpm
CPVC tailpiece - Maximum Hot water Temperature of 180°F @ 100 psi.
- Cold water rated Temperature of 73.4°F @ 400 psi.

Options

PF - with Z-Bite™ push fit tailpiece connections (1/2" - 1" only)
PR - with Z-Press™ press fit tailpiece connections (3/4" - 1" only)

Dimensions & Weights (do not include pkg.)

MODEL	INLET & OUTLET	DIMENSIONS (approximate) A in.	A mm	B in.	B mm	C in.	C mm	WEIGHT lbs.	WEIGHT kg
38-ZW1070XLCOMP	3/8" Compression	5 11/16	145	3 5/8	92	5 13/16	148	2	1
12-ZW1070XL	1/2" FNPT	5 7/16	138	3 3/8	86	5 1/4	133	2	1
12-ZW1070XLC	1/2" CU Sweat								
12-ZW1070XLCPVC	1/2" CPVC	5 7/8	149	3 13/16	97	6 3/16	157	2	1
12-ZW1070XLPEX	1/2" Barb	5 9/16	141	3 1/2	89	5 9/16	141	2	1
12-ZW1070XLPEXF1960	1/2" Barb	5 3/8	137	3 5/16	85	5 1/4	133	2	1
34-ZW1070XL	3/4" FNPT	5 1/2	140	3 1/2	89	5 7/16	138	2	1
34-ZW1070XLC	3/4" CU Sweat								
34-ZW1070XLCPVC	3/4" CPVC	5 7/16	138	3 3/8	86	5 5/16	135	2	1
34-ZW1070XLPEX	3/4" Barb	5 9/16	141	3 1/2	89	5 9/16	141	2	1
34-ZW1070XLPEXF1960	3/4" Barb	5 3/4	146	3 11/16	94	5 11/16	151	2	1
34-ZW1070XLM	3/4" MNPT	6 1/4	159	4 1/4	108	7	178	2	1
1-ZW1070XLC	1" CU Sweat	5 1/2	140	3 7/16	87	5 3/16	132	2	1

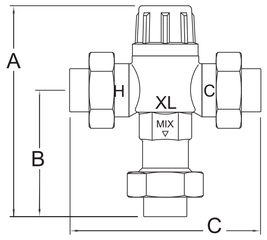

Flow Characteristic

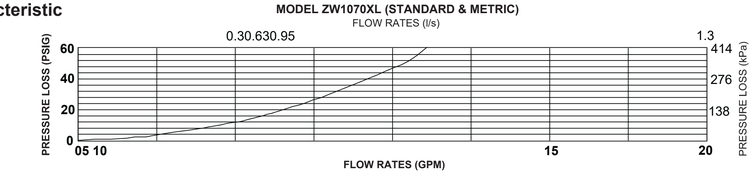

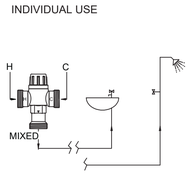

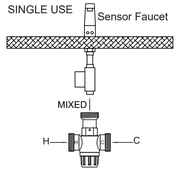

Piping Instructions

The device is designed to be installed at a single outlet. It may be used to supply individual outlets when there is sufficient supply pressure. It is suggested to use ball valves on the hot and cold inlet supplies.

Zurn Industries, LLC | Wilkins
1747 Commerce Way, Paso Robles, CA U.S.A. 93446 Ph. 855-663-9876, Fax 805-238-5766
In Canada | Zurn Industries Limited
7900 Goreway Drive, Unit 10, Brampton, Ontario L6T 5W6, 877-892-5216
www.zurn.com

Rev. K
Date: 1/20
Document No. TMV-ZW1070XL
Product No. Mode ZW1070XL

VCS architects
19251 Purus Dr.
Porter, TX 77365

CONSULTANTS

SOURCE2LOAD
Source2Load Engineering and Consulting, LLC
"Powering Solutions"
TBPE Firm No. F-15125
9337 Katy Freeway Suite B #282
Houston, Texas 77024
Office: (713) 497-5114
Fax: 281-416-5080
Email: info@source2load.com
www.source2load.com

BATES ALLEN PARK
BLACK COWBOY MUSEUM
630 CHARLIE ROBERTS LANE

STATE OF TEXAS
CHAD X. SLATER, SR.
10749
LICENSED
PROFESSIONAL ENGINEER
09/23/24

Drawing Date: 06/03/2024
Drawn By: SMA
Checked By: DDV
Scale: AS NOTED

Revisions:

DESCRIPTION	
ISSUE FOR BID & CONSTRUCTION	09/23/2024

THERMOSTATIC MIXING VALVE

Drawing Name

P.009.1

INSTALLATION GUIDE

SV10 Wastewater Sampling Port

Contents

Getting to Know the SV10 2
On the Floor Installation 3–4
Buried Installation 5–8

SCHIER

Part #: 8065-001-01
Find these instructions online at: schierproducts.com/sv10

© Copyright 2020 Schier, 03/19/2020

GETTING TO KNOW THE SV10

1. Polyethylene Cover with Gasket
2. Quarter-Turn Camlock Cover Bolts (x2)
3. Safety Stor
4. Safety Stor Tether
5. 4" Plain End Inlet Connection
6. 6" Plain End Inlet Connection
7. 6" Connection Cut Line (x2)
8. Sampling Port Body
9. Riser Cut Line
10. 6" Plain End Outlet Connection
11. 4" Plain End Outlet Connection
12. 2" x 35' Butyl Mastic Tape Roll (x2)

ON THE FLOOR INSTALLATION

Special Precautions

⚠ WARNING DO NOT AIR TEST UNIT OR RISER SYSTEMS! Doing so may result in property damage, personal injury or death.

⚠ CAUTION! Do not install this unit in any manner except as described in these instructions.

☐ Read all instructions before installation ☐ Install in conformance with all local codes

1 Test sampling port for water tightness

1a

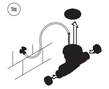

For base unit testing, cap both connection points with 4" flexible PVC caps. Remove cover and fill with water to just above the highest connection.

Inspect unit and connections for leaks. Check water level at specific time intervals per local code.

1b

SIDE VIEW

Have a Leak?
Call customer care at 913-951-3300
Hours 8am-5pm CST, M-F

ON THE FLOOR INSTALLATION

2 Connect

2a

The SV10 sampling port comes from the factory ready to connect to 4" drain lines.

6" Connections Only

Cut off the 4" connections at the premarked cut lines. Remove any burrs from the cut.

2b

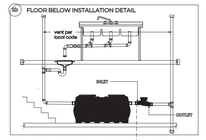

Mechanically couple inlet and outlet drainage lines to unit.

IMPORTANT! Make sure the sampling port is correctly aligned. The SV10 outlet is 2" lower than the inlet to facilitate sample retrieval and comply with local codes. DO NOT install backmands as doing so will result in improper drainage slope.

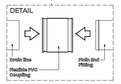

Do not solvent weld. Vent per local code.

3 Wet or Air Test Piping Per Local Code

⚠ WARNING DO NOT AIR TEST UNIT OR RISER SYSTEMS! Doing so may result in property damage, personal injury or death.

Leak? Call customer care at 913-951-3300 8a – 5p M – F CST

BURIED INSTALLATION

Special Precautions

⚠ WARNING DO NOT AIR TEST UNIT OR RISER SYSTEMS! Doing so may result in property damage, personal injury or death.

⚠ CAUTION! Do not install this unit in any manner except as described in these instructions.

☐ Read all instructions before installation ☐ Install in conformance with all local codes

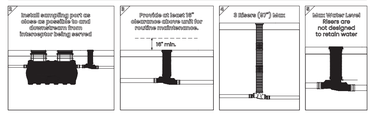

1 Test sampling port for water tightness

1a

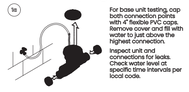

For base unit testing, cap both connection points with 4" flexible PVC caps. Remove cover and fill with water to just above the highest connection.

Inspect unit and connections for leaks. Check water level at specific time intervals per local code.

1b

SIDE VIEW

Have a Leak?
Call customer care at 913-951-3300
Hours 8am-5pm CST, M-F

BURIED INSTALLATION

2 Excavate Burial Pit

2a

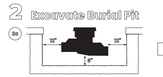

Excavate hole at least 12" larger than sampling port on all sides and 6" deeper than port bottom.

2b

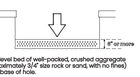

Lay a level bed of well-packed, crushed aggregate (approximately 3/4" size rock or sand, with no fines) in the base of hole.

3 Connect

3a

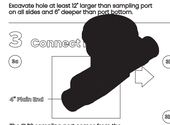

The SV10 sampling port comes from the factory ready to connect to 4" drain lines.

6" Connections Only

Cut off the 4" connections at the premarked cut lines. Remove any burrs from the cut.

3b

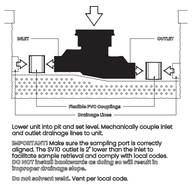

3bb

Lower unit into pit and set level. Mechanically couple inlet and outlet drainage lines to unit.

IMPORTANT! Make sure the sampling port is correctly aligned. The SV10 outlet is 2" lower than the inlet to facilitate sample retrieval and comply with local codes. DO NOT install backmands as doing so will result in improper drainage slope.

Do not solvent weld. Vent per local code.

4 Wet or Air Test Piping Per Local Code

⚠ WARNING DO NOT AIR TEST UNIT OR RISER SYSTEMS! Doing so may result in property damage, personal injury or death.

Have a Leak? Call customer care at 913-951-3300 Hours 8am-5pm CST, M-F

BURIED INSTALLATION

5 Bring Cover Flush-to-Grade

The SV10 is ready for burial depth of 14-1/2" from finished grade to bottom of unit (or 10-1/4" to centerline of inlet, 12-1/4" to centerline of outlet). Deeper burials will require adding a riser.

5a Measure dimension X to determine riser height needed.

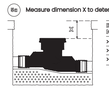

Riser Height Needed	Risers Required
>7" – 31"	FCR10
>31" – 54"	FCR10 (x2)
>54" – 97"	FCR10 (x3)

5b

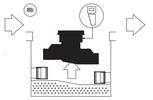

Disconnect the SV10 and remove it from the burial pit. Cut the SV10 at the Riser Cut Line, freeing the cover adapter from the sampling port body.

5aa Install Schier Riser(s) FCR10

See instructions included with FCR10 for installation details.

OR

5aa Install Your Own Riser. The SV10 is designed to accommodate any non-perforated, 6" nominal diameter drain pipe for riser use. Sch. 40 PVC or corrugated drain pipe is recommended.

1

Cut riser to a length 2" longer than the riser height needed.

2

Insert Riser into SV10 Body.

3

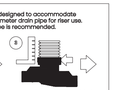

Use 1 piece of the provided butyl mastic tape to secure the riser joint. Make sure joint is completely sealed and riser is aligned square to the SV10 Body.

4

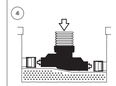

Return the SV10 to the burial pit and reconnect the drain lines

5

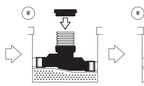

Place the cover/cover adapter onto the top of the riser and check to see if flush with grade. If too high, remove cover and trim riser as needed.

6

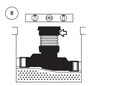

Secure cover/cover adapter using the other piece of the provided butyl mastic tape. Make sure joint is completely sealed and cover is level and flush-to-grade.

BURIED INSTALLATION

6 Backfill and Finished Grade

6a

Backfill evenly around tank using crushed aggregate (approximately 3/4" size rock or sand with no fines) or flowable fill. Do not compact backfill around units.

6b

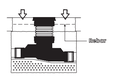

Pour concrete slab to finished grade.

6bb

Vehicular Traffic Areas:
Minimum 8" thick concrete slab with rebar required. Thickness of concrete around covers to be determined by specifying engineer. If traffic loading is required the concrete slab dimensions shown are for guideline purposes only. Concrete to be 28 day compressive strength to 4,000 PSI. Use No. 4 rebar (ø 1/2") grade 60 steel per ASTM A615, connected with tie wire. Rebar to be 2-1/2" from edge of concrete and spaced in a 12" grid with 4" spacing around access openings.

Pedestrian Traffic or Greenspace Areas:
Minimum 4" thick concrete slab with rebar required.

TOP VIEW

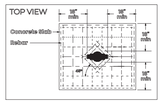

VCS architects
19251 Purus Dr.
Porter, TX 77365

CONSULTANTS

SOURCE2LOAD
Source2Load Engineering and Consulting, LLC
"Powering Solutions"
TBPE Firm No. F-15125
9337 Katy Freeway Suite B #282
Houston, Texas 77024
Office: (713) 497-5114
Fax: 281-416-5080
Email: info@source2load.com
www.source2load.com

BATES ALLEN PARK
BLACK COWBOY MUSEUM
630 CHARLIE ROBERTS LANE

STATE OF TEXAS
CHAD X. SLATER, SR.
107748
LICENSED PROFESSIONAL ENGINEER

09/23/24

Drawing Date: 06/03/2024
Drawn By: SMA
Checked By: DDV
Scale: AS NOTED

Revisions:

DESCRIPTION	
ISSUE FOR BID & CONSTRUCTION	09/23/2024

SAMPLE WELL DETAILS

Drawing Name

P.009

@	At
ADD.	Addendum
Adj.	Adjacent
A.F.F.	Above Finish Floor
Aggr.	Aggregate
Alt.	Alternate
Al. or Alum.	Aluminum
Anod.	Anodized
Approx.	Approximate
Arch.	Architect
Bd.	Board
Bet.	Between
Bldg.	Building
Blk. or Blkg.	Block or Blocking
Brz.	Bronze
Cab.	Cabinet
CL	Centerline
Clr.	Clear
Conc.	Concrete
C. M. U.	Concrete Masonry Unit
Demo.	Demolish, Demolition
Det. or DT	Detail
Dwgs.	Drawings
Ea.	Each
Ele.	Elevation
Elev.	Elevator
Encl.	Enclose (ure)
Equip.	Equipment
Eq.	Equal
Exist.	Existing
Ext	Exterior
Fin.	Finish (ed)
GA	Gauge
Galv.	Galvanized
Gen.	General
GWB	Gypsum Wall Board
Gyp. Bd.	Gypsum Wall Board
Hdwd.	Hardwood
Hdwr.	Hardware
Horiz.	Horizontal
Ht.	Height
I. D.	Inside Diameter
Incl.	Included, Including
Int.	Interior
Jt.	Joint
Max.	Maximum
M. D.	Medium Density
Min.	Minimum
Mtl.	Metal
Misc.	Miscellaneous
Mtd.	Mounted
N. I. C.	Not in Contract
No. or #	Number
N. T. S.	Not to Scale
O. A.	Overall
O. C.	On Center
O. D.	Outside Diameter
Opp.	Opposite
Opp. H.	Opposite Hand
P. Lam.	Plastic Laminate
Perf.	Perforate (d)
Plywd.	Plywood
Pnl.	Panel
Pr.	Pair
Pt.	Point
P. T.	Pressure Treated
Ptd.	Painted
Ref.	Reference
Sect.	Section
S. F.	Square Feet
Sht.	Sheet
Sim.	Similar
Std.	Standard
Stl.	Steel
Susp.	Suspended
Thk. or T.	Thick
Typ.	Typical
U. O. N.	Unless Otherwise Noted
Vert.	Vertical
V. I. F.	Verify in Field
W/	With
W/O	Without
W. W. F.	Welded Wire Fabric
Wd.	Wood

ABBREVIATIONS

PROJECT SYMBOLS

ABCDEFGHIJKLMNOPQRSTUVWXYZ
abcdefghijklmnopqrstuvwxyz1234567890&

Avenir Next Condensed Bold

ABCDEFGHIJKLMNOPQRSTUVWXYZ
abcdefghijklmnopqrstuvwxyz1234567890&

Avenir Next Condensed Medium

ABCDEFGHIJKLMNOPQRSTUVWXYZ
abcdefghijklmnopqrstuvwxyz1234567890&

Avenir Next Demi Bold

ABCDEFGHIJKLMNOPQRSTUVWXYZ
abcdefghijklmnopqrstuvwxyz1234567890&

Avenir Next Medium

PURCHASE OF FONTS:
Signage Contractor to purchase all necessary Fonts
Typefont(s) is available from (Typefont Vendor (Example: The Font Bureau @ http://fontbureau.com)

PROJECT TYPEFACE

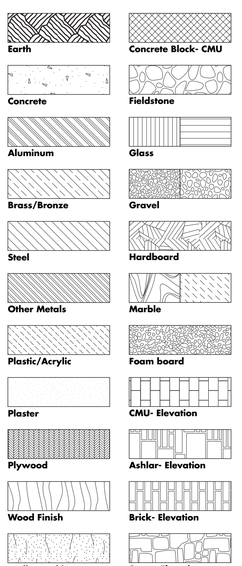

MATERIAL & SYMBOLS

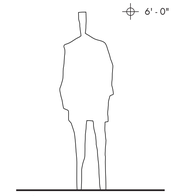

Scale Figure
Indicates a scale reference. Figure would be 6'-0" actual size.

1 **Elevation**
Scale

Drawing No.
Indicates drawing number, drawing title and scale

1

Material Reference
Indicates material specifications

Ground Lines

Visible Object Lines
Indicates separation of objects and edges of objects

Hidden Object Lines
Indicates edges of objects behind visible objects

Color Lines
Indicates separation of colors on object

11/2"

Dimension Lines

Broken Segment

Center Line

Base Line

4/G.00

Section View
Left number indicates detail number, Right number indicates page where detail is located. Single number, detail is located on same page.

4/G.00

Elevation Reference
Indicates that point of view

4/G.00

Detail Reference
Indicates an area that has been enlarged or detailed. Left number indicates detail number, right number indicates page where detail is located. Single number, detail is located on same page.

Match Line A
See G.00 for Continuation

Match Line
Indicates where multiple drawings align. Top text indicates matching edge, bottom number indicates page where matching drawing is located.

2

Revision Bubble & Reference
Indicates a revised portion of a drawing

PROJECT REFERENCES

Note: The term Signage Contractor applies to any entity who performs or is awarded all or part of the fabrication or installation to conform to the design documents, for this project. In some instances the term may apply to the same entity.

GENERAL NOTES ABOUT BID SUBMITTAL

Refer to Project Manual

GENERAL NOTES
FOR FABRICATION AND INSTALLATION OF THIS PROJECT

1. Do not scale the drawings. All sign copy should be considered to be representative and is subject to change. Refer to final message schedule for final copy on all signs.
2. The Contract Documents are complementary, and what is required by one shall be as binding as if required by all. The Signage Contractor shall coordinate all required portions of work in contract scope.
3. The Signage Contractor shall conform to these drawings and specifications and submit to the Graphic Designer samples for all finishes included in their scope of work before commencement of such work.
4. For the purpose of bidding process, proprietary names identifying items of work are used solely to describe the standard of the product or the color of the finish, unless the items of work are explicitly noted as not having an equal. Signage Contractor shall secure approval of any substitutions from the Graphic Designer. Any items approved for substitution should be submitted to the Graphic Designer for final approval.
5. All dimensions are to the exterior face of the finished material unless otherwise noted. All elevations are noted from finished floor elevations.
6. All dimensions of existing work and all dimensions required for work that is connected with work in place shall be verified by the Signage Contractor. In addition, the Signage Contractor shall verify all finishes and notify the Graphic Designer of any discrepancies before performing any work.
7. The Signage Contractor shall notify the Graphic Designer of any discrepancies in the fabrication documents immediately and shall not proceed or allow sub-fabricators to work in those areas until said discrepancies are resolved.
8. When changes are required, for any reason, notify the Graphic Designer before performing any work. Changes which alter the contract documents must have the approval of the Graphic Designer and Architect before commencement of such work. Changes which modify the contract amount must have the approval of the Graphic Designer and Owner before commencement of such work.
9. All graphics and colors provided must conform to scale, specifications, and PMS numbers where provided.
10. All work shall be done in accordance with all applicable codes and to the highest standards of trade practice.
11. Prior to commencing any work, the Signage Contractor who is awarded all or part of fabrication and/or installation shall review with the Owner, Architect and the Graphic Designer, the phasing of their work and secure approval of all parties. Submit to the Architect and the Graphic Designer a master schedule of the awarded work one (1) week after the contract signing.
12. All interior finish and trim materials are to meet Class III flame spread ratings of 76 to 200, as per applicable code.
13. Signage Contractor is responsible for obtaining and paying for all applicable permits and certificates required of their work.
14. The Signage Contractor shall warrant that all merchandise is free of defects in material or workmanship and shall provide Owner with a warranty to replace or repair any merchandise that fails to conform to above for a period of no less than one (1) year from date of final acceptance.
15. The Signage Contractor shall provide and install adequate blocking for all wall hung and wall supported items except for those items which are hung from items not in contract.
16. The Signage Contractor shall patch and repair all existing surfaces as required prior to applying new finishes. All openings, voids, or unfinished surfaces created by removal or alteration of existing work, shall be closed or patched and finished as necessary to match existing continuous surfaces or new finishes required.
17. All hangers, channels, rods and other misc. support steel shall be installed by the Signage Contractor as necessary for the support of suspended equipment (signage) and shall be fastened to the existing structure in such a manner as to not compromise its existing structural integrity or fire rating.
18. The Signage Contractor shall keep the site work area(s) clear of unnecessary debris; and shall keep all work area(s) secured when unattended for the duration of the installation period.
19. The Signage Contractor shall clean the site of all unnecessary debris and clean all glass, chrome, and any other items before vacating the site and final Owner sign-off.
20. The Signage Contractor will be required to have structural elements of exterior signs stamped by an engineer licensed within the State of the completed work. Standard and approved methods of fabrication will be required by the Graphic Designer.
21. The Signage Contractor is responsible for removal of all existing signage and coordinating with Owner on wall repair at all existing signage locations.

QUALIFIERS

The graphic design requirements shown by the details on these sign type drawing documents are for design intent only and intended to establish basic dimensions of units or modules, profiles and sight lines of members, and appearance. Within these limitations, the Signage Contractor is responsible for fabrication of the entire system, and to make whatever modifications of, and additions to the details as may be required. Maintain the visual design concept as shown, including members sizes, profiles and alignment of components as accurately as possible.

The Signage Contractor shall supplement the general design shown with detailed shop drawings for the Graphic Designer's approval. The shop drawings shall include major aspects of the system proposed, such as sections, shapes and connections of components and joints, how temperature movement is handled, venting, and anchorage to structure.

All ideas, design arrangements, or plans indicated or represented by these drawings are owned by, and remain the sole property of the Graphic Designer. No ideas, designs, arrangements, or plans shall be disclosed to any other person, firm, or corporation for any purpose whatsoever without the express written consent of the Graphic Designer.

All Artwork and Drawings required under the scope of these documents are to become the sole property of the Owner at the completion of the contract, with all original, or created artwork or drawings to be surrendered to the Owner at the end of fulfillment of the contract or sooner if requested in writing from the Owner.

All Artwork and Drawings are not to be reproduced or circulated for use outside the scope of this contract without written consent of the Owner. Failure to do so will result in legal action to the fullest extent of the law.

GENERAL NOTES

architects

19251 Purus Dr.
Porter, TX 77365

CONSULTANTS

BATES ALLEN PARK
BLACK COWBOY MUSEUM
630 CHARLIE ROBERTS LANE
KENDLETON, TX. 77451

Drawing Date: 06/03/2024
Drawn By: SMA
Checked By: DDV
Scale: AS NOTED

Revisions:

DESCRIPTION	
ISSUE FOR BID & CONSTRUCTION	09/23/2024

Drawing Name

SIGNAGE & GRAPHICS
PROJECT INFORMATION
SG-001

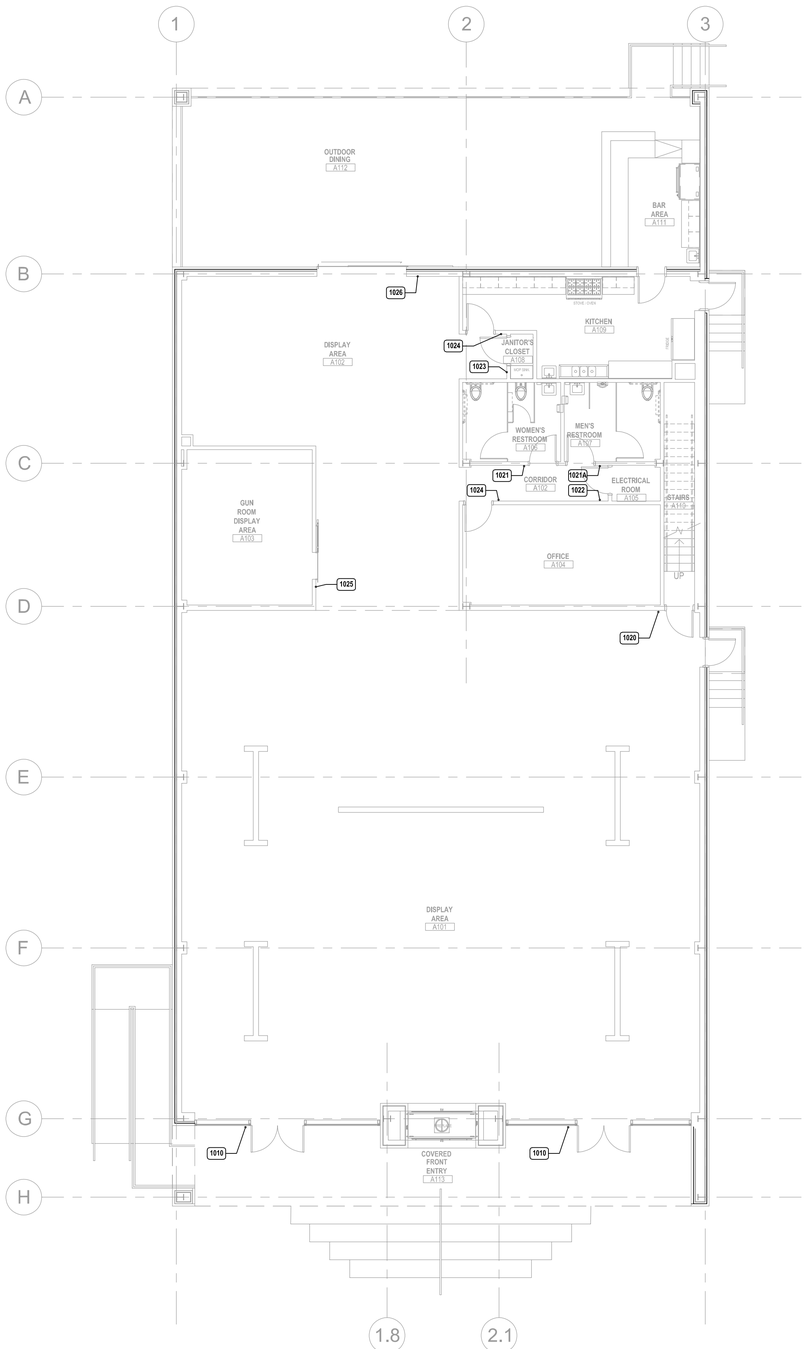

SIGN LOCATION OVERALL FIRST FLOOR PLAN SCALE: 1/8"=1'-0"

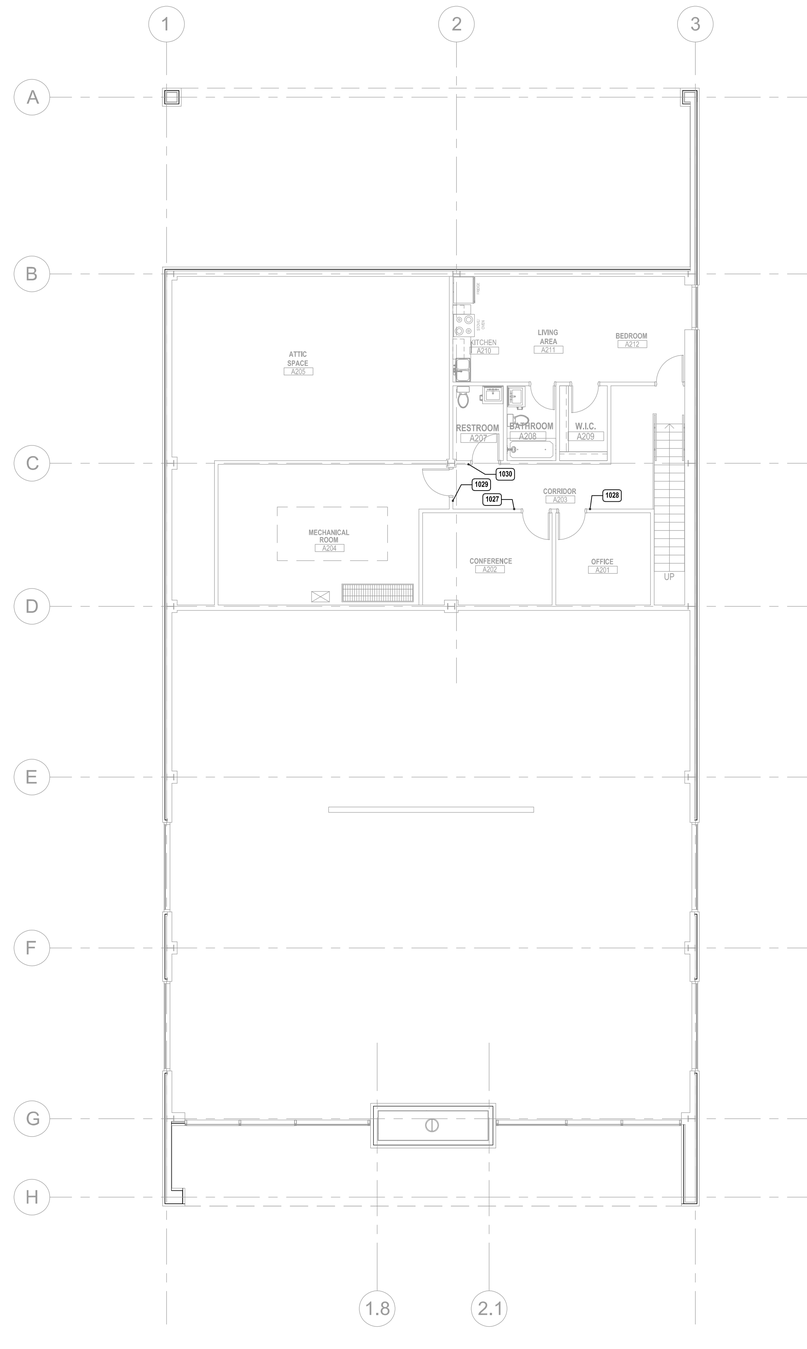

SIGN LOCATION OVERALL SECOND FLOOR PLAN SCALE: 1/8"=1'-0"

SIGNAGE GENERAL NOTES

1. Do not scale the drawings. All sign copy should be considered to be representative and is subject to change. Refer to final message schedule for final copy on all signs.
2. The Contract Documents are complementary, and what is required by one shall be as binding as if required by all. The Signage Contractor shall coordinate all required portions of work in contract scope.
3. The Signage Contractor shall conform to these drawings and specifications and submit to the Graphic Designer samples for all finishes included in their scope of work before commencement of such work.
4. For the purpose of bidding process, proprietary names identifying items of work are used solely to describe the standard of the product or the color of the finish, unless the items of work are explicitly noted as not having an equal. Signage Contractor shall secure approval of any substitutions from the Graphic Designer. Any items approved for substitution should be submitted to the Graphic Designer for final approval.
5. All dimensions are to the exterior face of the finished material unless otherwise noted. All elevations are noted from finished floor elevations.
6. All dimensions of existing work and all dimensions required for work that is connected with work in place shall be verified by the Signage Contractor. In addition, the Signage Contractor shall verify all finishes and notify the Graphic Designer of any discrepancies before performing any work.
7. The Signage Contractor shall notify the Graphic Designer of any discrepancies in the fabrication documents immediately and shall not proceed or allow sub-fabricators to work in those areas until said discrepancies are resolved.
8. When changes are required, for any reason, notify the Graphic Designer before performing any work. Changes which alter the contract documents must have the approval of the Graphic Designer and Architect before commencement of such work. Changes which modify the contract amount must have the approval of the Graphic Designer and Owner before commencement of such work.
9. All graphics and colors provided must conform to scale, specifications, and PMS numbers where provided.
10. All work shall be done in accordance with all applicable codes and to the highest standards of trade practice.
11. Prior to commencing any work, the Signage Contractor who is awarded all or part of fabrication and/or installation shall review with the Owner, Architect and the Graphic Designer, the phasing of their work and secure approval of all parties. Submit to the Architect and the Graphic Designer a master schedule of the awarded work one (1) week after the contract signing.
12. All interior finish and trim materials are to meet Class III flame spread ratings of 76 to 200, as per applicable code.
13. Signage Contractor is responsible for obtaining and paying for all applicable permits and certificates required of their work.
14. The Signage Contractor shall warrant that all merchandise is free of defects in material or workmanship and shall provide Owner with a warranty to replace or repair any merchandise that fails to conform to above for a period of no less than one (1) year from date of final acceptance.
15. The Signage Contractor shall provide and install adequate blocking for all wall hung and wall supported items except for those items which are hung from items not in contract.
16. The Signage Contractor shall patch and repair all existing surfaces as required prior to applying new finishes. All openings, voids, or unfinished surfaces created by removal or alteration of existing work, shall be closed or patched and finished as necessary to match existing continuous surfaces or new finishes required.
17. All hangers, channels, rods and other misc. support steel shall be installed by the Signage Contractor as necessary for the support of suspended equipment (signage) and shall be fastened to the existing structure in such a manner as to not compromise its existing structural integrity or fire rating.
18. The Signage Contractor shall keep the site work area(s) clear of unnecessary debris; and shall keep all work area(s) secured when unattended for the duration of the installation period.
19. The Signage Contractor shall clean the site of all unnecessary debris and clean all glass, chrome, and any other items before vacating the site and final Owner sign-off.
20. The Signage Contractor will be required to have structural elements of exterior signs stamped by an engineer licensed within the State of the completed work. Standard and approved methods of fabrication will be required by the Graphic Designer.
21. The Signage Contractor is responsible for removal of all existing signage and coordinating with Owner on wall repair at all existing signage locations.

PLAN NORTH

TRUE NORTH

VCS architects

19251 Purus Dr.
Porter, TX 77365

CONSULTANTS

BATES ALLEN PARK
BLACK COWBOY MUSEUM
630 CHARLIE ROBERTS LANE
KENDLETON, TX. 77451

Drawing Date: 06/03/2024
Drawn By: SMA
Checked By: DDV
Scale: AS NOTED

Revisions:

DESCRIPTION	
ISSUE FOR BID & CONSTRUCTION	09/23/2024

Drawing Name

SIGNAGE AND GRAPHICS OVERALL FIRST AND SECOND FLOOR PLANS

SG-101

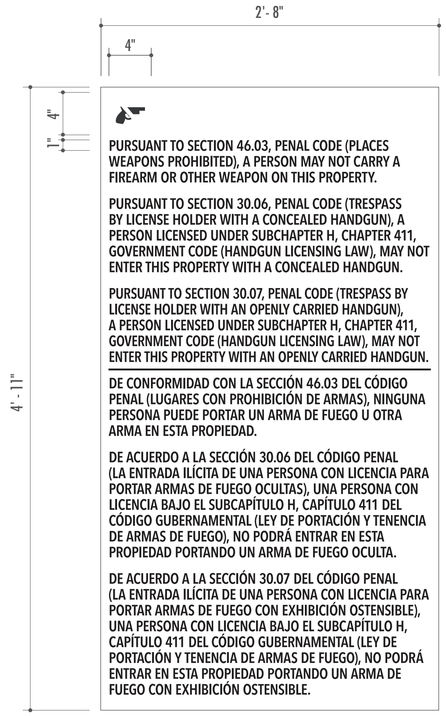

DETAIL ELEVATION – ENGLISH AND SPANISH NTS 2

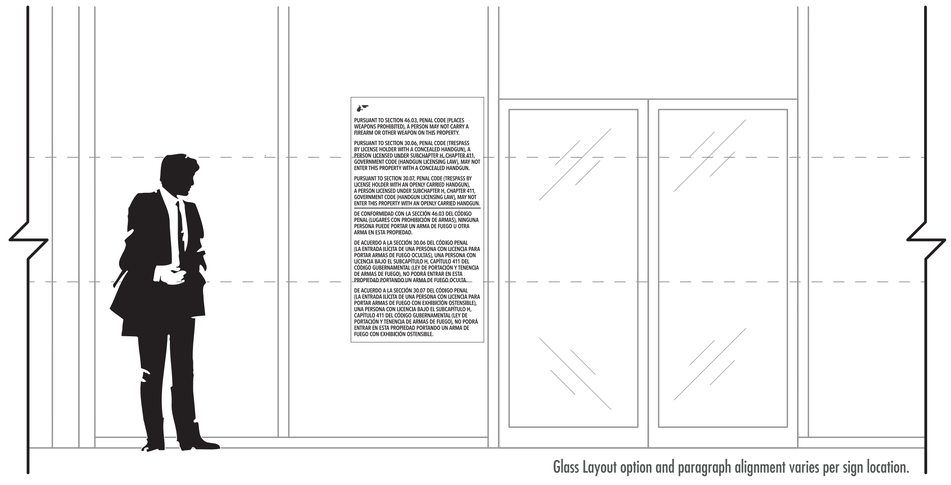

Glass Layout option and paragraph alignment varies per sign location.

GUN LAW DETAIL ON GLASS NTS 4

SIGNAGE GENERAL NOTES

1. White text and red/white symbols to be digitally printed in high resolution on optically clear vinyl with clear **3M Gloss Overlaminate 8518** for protection. 5 year warranty against cracking or fading.

   Typestyle: Avenir Next Condensed Demi Bold, All Caps, compressed 90% horizontally

2. Vinyl installs on exterior (first surface of glass aligned 2" from mullion & centered vertically in window.

3. The Signage Contractor is to field verify all existing conditions prior to submitting detailed shop drawings and copy layouts.

VCS architects
19251 Purus Dr.
Porter, TX 77365

CONSULTANTS

BATES ALLEN PARK
BLACK COWBOY MUSEUM
630 CHARLIE ROBERTS LANE
KENDLETON, TX. 77451

Drawing Date: 06/03/2024
Drawn By: SMA
Checked By: DDV
Scale: AS NOTED

Revisions:

DESCRIPTION	
ISSUE FOR BID & CONSTRUCTION	09/23/2024

Drawing Name

SIGNAGE & GRAPHICS EXTERIOR ELEVATIONS

SG-201

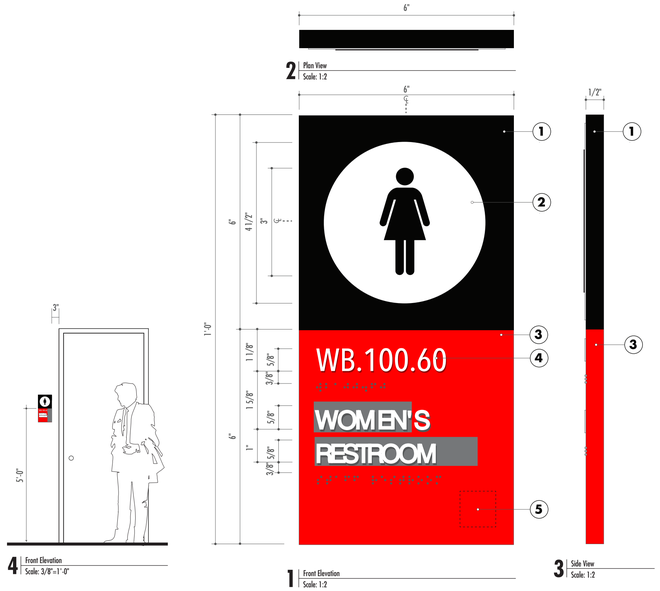

SIGN 1021 DETAIL

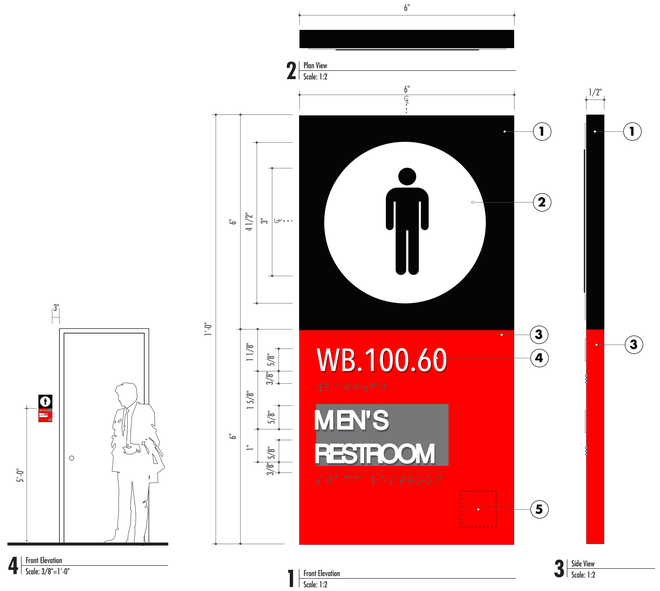

SIGN 1021A DETAIL NTS 2

SIGNAGE GENERAL NOTES

1. MESSAGE PANEL TO BE PHOTOPOLYMER APPLIED TO 1/2" THICK ACRYLIC. SEAM TO BE SEALED AND PAINTED. EDGES TO APPEAR SEAMLESS. SIGN TO HAVE RAISED COPY AND GRADE 2 BRAILLE, UPPER HEADER PAINTED TO MATCH P-2 BLACK WITH SATIN FINISH ON THE FACE AND EDGES. ALL EDGES WILL BE FINISHED SMOOTH PRIOR TO PRIMING AND PAINTING.
2. SYMBOL FIELD BACKGROUND TO BE PAINTED P-4 WHITE WITH A STAIN FINISH. SYMBOL TO BE RAISED 1/32" AND TIPPED SCREENED P-2 STANDARD BLACK.
3. LOWER FIELD PAINTED TO MATCH P-1 DARK GREY WITH A STAIN FINISH.
4. RAISED MESSAGE TO BE SCREENED TIPPED TO MATCH P-4 WHITE WITH A SATIN FINISH. GRADE 2 BRAILLE TO BE RAISED 1/32", TIPPED TO ACHIEVE A DOMED SURFACE AND PAINTED TO MATCH BACKGROUND. ALL ROOM NUMBERS AND ROOM NAMES TO BE CONFIRMED BY OWNER PRIOR TO FABRICATION. SIGNAGE SUBCONTRACTOR TO SUBMIT DETAILED SHOP DRAWINGS FOR APPROVAL. ROOM NUMBERS SHOWN ARE FOR GRAPHIC PURPOSES ONLY.
5. TYPESTYLE: AVENIR NEXT CONDENSED MEDIUM
6. PLACEMENT AREA FOR +/- PRESSURE STICKER
7. COMPLETE SIGN ASSEMBLY TO BE MOUNTED FLUSH TO WALL SURFACE WITH THIN MIL VHB TAPE AND SILICONE ADHESIVE. SIGN TO BE LOCATED AT 5'-0" TO CENTER A.F.F. AND 3" FROM THE STRIKE SIDE OF THE DOOR.
8. THE SIGNAGE CONTRACTOR IS TO FIELD VERIFY ALL EXISTING CONDITIONS PRIOR TO SUBMITTING DETAILED SHOP DRAWINGS AND COPY LAYOUTS.

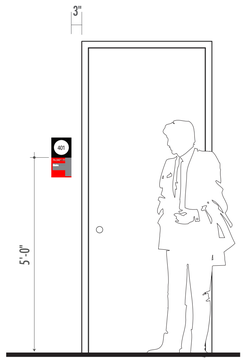

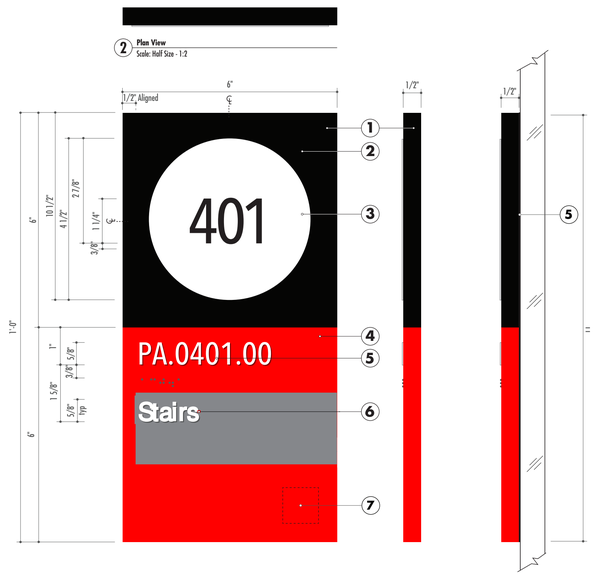

SIGN 1020 DETAIL NTS 4

19251 Purus Dr.
Porter, TX 77365

CONSULTANTS

BATES ALLEN PARK
BLACK COWBOY MUSEUM
630 CHARLIE ROBERTS LANE
KENDLETON TX. 77451

Drawing Date: 06/03/2024
Drawn By: SMA
Checked By: DDV
Scale: AS NOTED

Revisions:

DESCRIPTION	
ISSUE FOR BID & CONSTRUCTION	09/23/2024

Drawing Name

SIGNAGE & GRAPHICS
SIGN 1020 & 1021
SIGNAGE DETAILS

SG-202

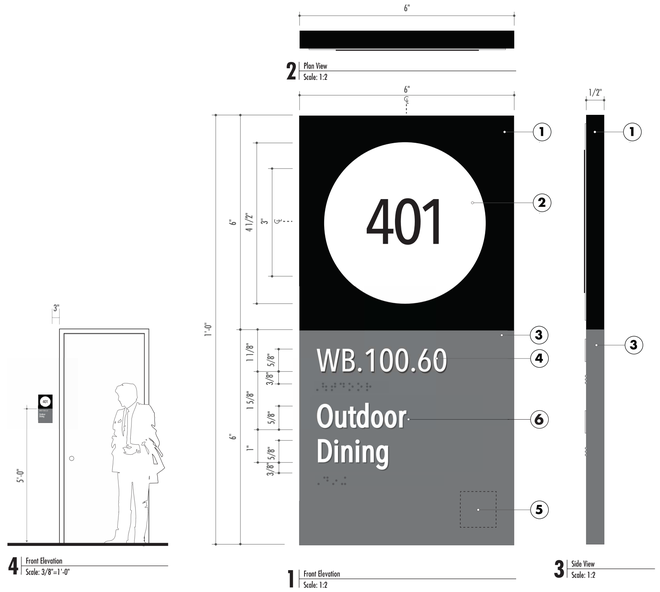

SIGN 1026 DETAIL

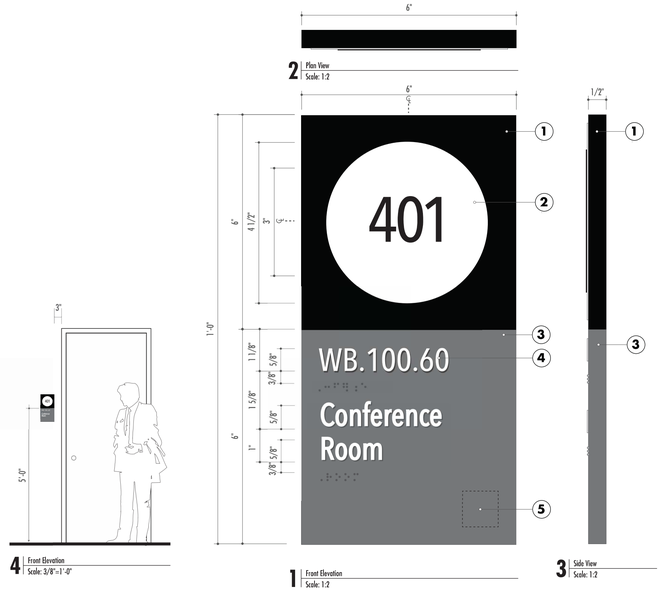

SIGN 1027 DETAIL NTS 2

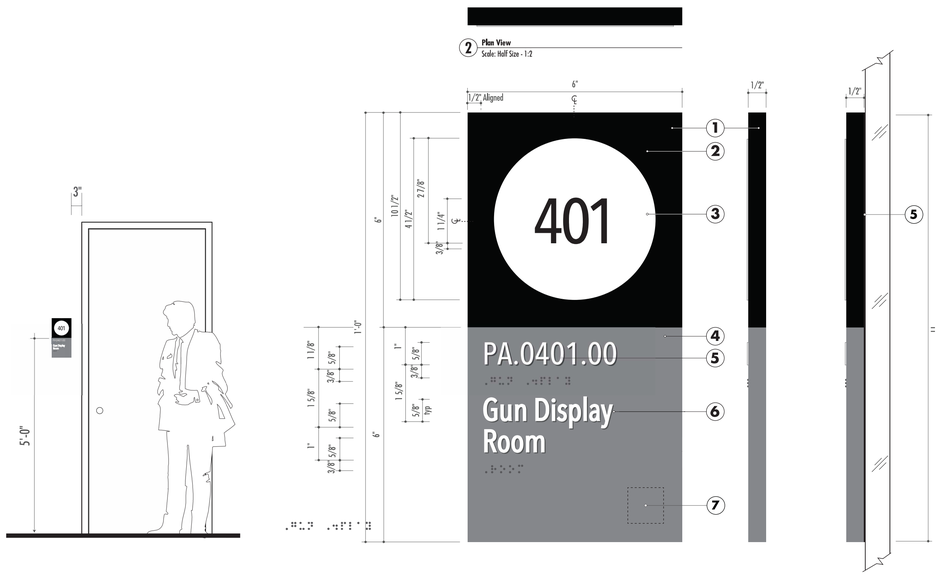

SIGN 1025 DETAIL NTS 4

SIGNAGE GENERAL NOTES

1. MESSAGE PANEL TO BE PHOTOPOLYMER APPLIED TO 1/2" THICK ACRYLIC. SEAM TO BE SEALED AND PAINTED. EDGES TO APPEAR SEAMLESS. SIGN TO HAVE RAISED COPY AND GRADE 2 BRAILLE, UPPER HEADER PAINTED TO MATCH P-2 BLACK WITH SATIN FINISH ON THE FACE AND EDGES. ALL EDGES WILL BE FINISHED SMOOTH PRIOR TO PRIMING AND PAINTING.
2. SYMBOL FIELD BACKGROUND TO BE PAINTED P-4 WHITE WITH A STAIN FINISH. SYMBOL TO BE RAISED 1/32" AND TIPPED SCREENED P-2 STANDARD BLACK.
3. LOWER FIELD PAINTED TO MATCH P-1 DARK GREY WITH A STAIN FINISH.
4. RAISED MESSAGE TO BE SCREENED TIPPED TO MATCH P-4 WHITE WITH A SATIN FINISH. GRADE 2 BRAILLE TO BE RAISED 1/32", TIPPED TO ACHIEVE A DOMED SURFACE AND PAINTED TO MATCH BACKGROUND. ALL ROOM NUMBERS AND ROOM NAMES TO BE CONFIRMED BY OWNER PRIOR TO FABRICATION. SIGNAGE SUBCONTRACTOR TO SUBMIT DETAILED SHOP DRAWINGS FOR APPROVAL. ROOM NUMBERS SHOWN ARE FOR GRAPHIC PURPOSES ONLY.
5. TYPESTYLE: AVENIR NEXT CONDENSED MEDIUM
6. PLACEMENT AREA FOR +/- PRESSURE STICKER
7. COMPLETE SIGN ASSEMBLY TO BE MOUNTED FLUSH TO WALL SURFACE WITH THIN MIL VHB TAPE AND SILICONE ADHESIVE. SIGN TO BE LOCATED AT 5'-0" TO CENTER A.F.F. AND 3" FROM THE STRIKE SIDE OF THE DOOR.
8. THE SIGNAGE CONTRACTOR IS TO FIELD VERIFY ALL EXISTING CONDITIONS PRIOR TO SUBMITTING DETAILED SHOP DRAWINGS AND COPY LAYOUTS.

VCS architects
19251 Purus Dr.
Porter, TX 77365

CONSULTANTS

BATES ALLEN PARK
BLACK COWBOY MUSEUM
630 CHARLIE ROBERTS LANE
KENDLETON TX. 77451

Drawing Date: 06/03/2024
Drawn By: SMA
Checked By: DDV
Scale: AS NOTED

Revisions:

DESCRIPTION	
ISSUE FOR BID & CONSTRUCTION	09/23/2024

Drawing Name

SIGNAGE & GRAPHICS
SIGN 1025, 1026 & 1027
SIGNAGE DETAILS

SG-204

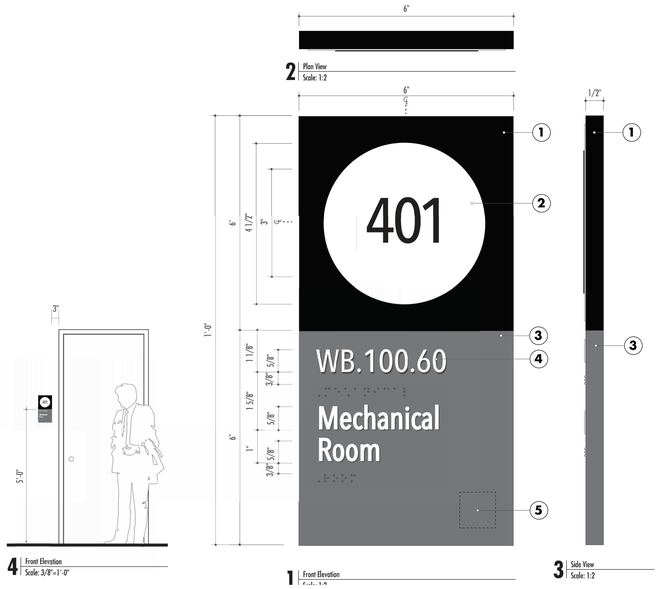

SIGN 1029 DETAIL

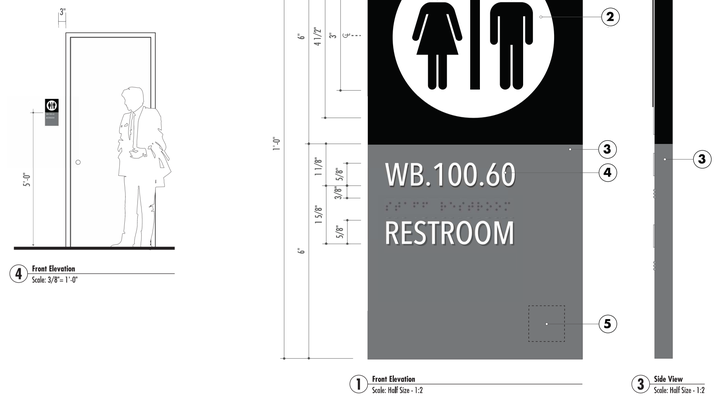

SIGN 1030 DETAIL NTS 2

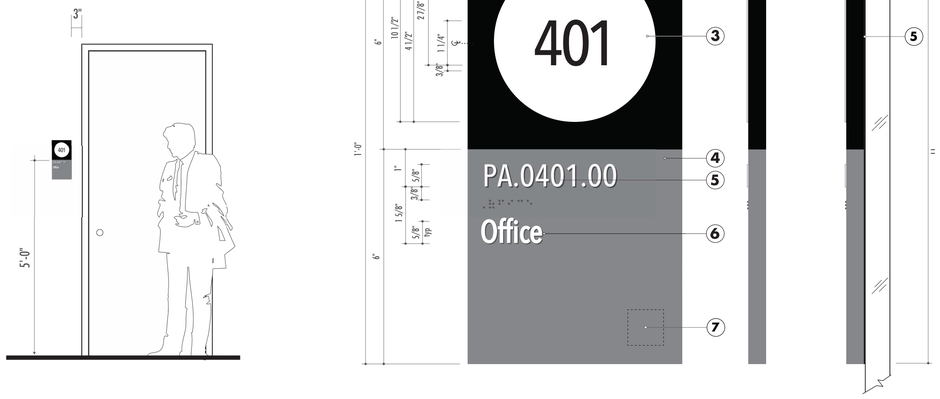

SIGN 1028 DETAIL NTS 4

SIGNAGE GENERAL NOTES

1. MESSAGE PANEL TO BE PHOTOPOLYMER APPLIED TO 1/2" THICK ACRYLIC. SEAM TO BE SEALED AND PAINTED. EDGES TO APPEAR SEAMLESS. SIGN TO HAVE RAISED COPY AND GRADE 2 BRAILLE, UPPER HEADER PAINTED TO MATCH P-2 BLACK WITH SATIN FINISH ON THE FACE AND EDGES. ALL EDGES WILL BE FINISHED SMOOTH PRIOR TO PRIMING AND PAINTING.
2. SYMBOL FIELD BACKGROUND TO BE PAINTED P-4 WHITE WITH A STAIN FINISH. SYMBOL TO BE RAISED 1/32" AND TIPPED SCREENED P-2 STANDARD BLACK.
3. LOWER FIELD PAINTED TO MATCH P-1 DARK GREY WITH A STAIN FINISH.
4. RAISED MESSAGE TO BE SCREENED TIPPED TO MATCH P-4 WHITE WITH A SATIN FINISH. GRADE 2 BRAILLE TO BE RAISED 1/32", TIPPED TO ACHIEVE A DOMED SURFACE AND PAINTED TO MATCH BACKGROUND. ALL ROOM NUMBERS AND ROOM NAMES TO BE CONFIRMED BY OWNER PRIOR TO FABRICATION. SIGNAGE SUBCONTRACTOR TO SUBMIT DETAILED SHOP DRAWINGS FOR APPROVAL. ROOM NUMBERS SHOWN ARE FOR GRAPHIC PURPOSES ONLY.
5. TYPESTYLE: AVENIR NEXT CONDENSED MEDIUM
6. PLACEMENT AREA FOR +/- PRESSURE STICKER
7. COMPLETE SIGN ASSEMBLY TO BE MOUNTED FLUSH TO WALL SURFACE WITH THIN MIL VHB TAPE AND SILICONE ADHESIVE. SIGN TO BE LOCATED AT 5'-0" TO CENTER A.F.F. AND 3" FROM THE STRIKE SIDE OF THE DOOR.
8. THE SIGNAGE CONTRACTOR IS TO FIELD VERIFY ALL EXISTING CONDITIONS PRIOR TO SUBMITTING DETAILED SHOP DRAWINGS AND COPY LAYOUTS.

VCS architects
19251 Purus Dr.
Porter, TX 77365

CONSULTANTS

BATES ALLEN PARK
BLACK COWBOY MUSEUM
630 CHARLIE ROBERTS LANE
KENDLETON TX. 77451

Drawing Date: 06/03/2024
Drawn By: SMA
Checked By: DDV
Scale: AS NOTED

Revisions:

DESCRIPTION	
ISSUE FOR BID & CONSTRUCTION	09/23/2024

Drawing Name

SIGNAGE & GRAPHICS
SIGN 1028, 1029 & 1030
SIGNAGE DETAILS

SG-205

The Hearthroom Series

Wood Burning Fireplaces

ACUCRAFT®

Fire Reimagined.

The Hearthroom Series

Table of Contents

Why Acucraft?.....3
Features & Benefits.....4
Indoor/Outdoor Wood Fireplaces.....5
See-Through Wood Fireplaces.....6
Single-Sided Wood Fireplaces.....7
Specifications & Venting.....8
Convert Your Wood Fireplace to Gas.....11
Open Hearth Options.....13
Color Options.....14
Front & Door Styles.....15
Options & Accessories.....17
The Acucraft Difference.....20
Our Customers.....21

ACUCRAFT

Fire Reimagined.

Fire Reimagined.

For more than 40-years, Acucraft has been designing, developing, and perfecting the fireplace experience. Our fireplaces are handcrafted and custom built by a team of engineers and craftsmen who are committed to quality and performance. At Acucraft, we create the most unique, distinctive, and highest quality custom gas and wood burning fireplaces in the world.

We Are The Fireplace Experts.

When it comes to delivering the absolute best fireplace experience, there are no shortcuts. Our commitment to quality and performance is handcrafted into every fireplace that bears our nameplate. Built in Big Lake, Minnesota, by true craftsmen who know how to conquer the cold and deliver a fireplace that performs as good as it looks. Built from heavy-gauge US Steel and backed by a Lifetime Warranty and a 100% Satisfaction Guarantee, nobody does it better.

CERTIFIED

Hearthroom series fireplaces are UL-127 and CAN/ULC-S610 certified.

CUSTOMIZED

Acucraft works directly with you to create a truly unique fireplace experience.

HANDCRAFTED

Never mass-produced, each fireplace is meticulously, custom built.

WORLDWIDE

Built in America and shipped directly to you, anywhere in the world.

WARRANTY

Keep the fire burning, each Acucraft firebox is backed by a Lifetime Warranty.

The Hearthroom Series

Features & Benefits

Future Flexibility

The Hearthroom Series can easily be converted to gas giving you future flexibility.

Lasting Quality

Premium materials and craftsmanship delivers consistent performance year-after-year.

Viewing Area

Choose the perfect size for your space with viewing areas of 36", 44" and 48".

Lifetime Warranty

The best warranty in the industry ensures a lifetime of performance and enjoyment.

Safety Tested

Tested and listed to UL-127 and CAN/ULC-S610 for use in the United States and Canada.

Custom Styles

Enjoy single-sided, see-through, or indoor/outdoor, each with removable double doors.

Exterior Side

ACUCRAFT
Fire Reimagined.

The Hearthroom Indoor/Outdoor Wood Fireplace

Available in 36", 44" and 48" viewing areas.

Hearthroom 36 Indoor/Outdoor Wood Fireplace with Japanese Brown Patina and Basket Handles

The Hearthroom See-Through Wood Fireplace

Available in 36", 44" and 48" viewing areas.

Hearthroom 36 See-Through Wood Fireplace with Aged Bronze Patina and Spring Handles

The Hearthroom Single-Sided Wood Fireplace

Available in 36", 44" and 48" viewing areas.

Hearthroom 48 single sided with strapping, black finish and basket handles.

Specifications

ACUCRAFT
Fire Reimagined.

Indoor / Outdoor Models:

	Door Opening	Insulated Panel Dimensions	Framing Dimensions	Firebox (Cubic Ft)	Blowers	Class A Flue	Combustion Air Intakes	Total Weight
36	36" W x 21" H	51" W x 46" H x 35" D	55" W x 50 1/8" H x 35" D	8.75	Thermostatically Controlled Variable Speed 250 CFM Blower System	14" ID Round - 16" OD	(2) 4"	1,300 LBS
44	44" W x 26" H	59" W x 50" H x 35" D	63" W x 54" H x 35" D	13.2	Thermostatically Controlled Variable Speed 250 CFM Blower System	16" ID Round - 18" OD	(2) 5"	1,400 LBS
48	48" W x 42" H	63" W x 66 1/2" H x 42 1/2" D	67" W x 72 1/2" H x 42 1/2" D	24.5	Thermostatically Controlled Variable Speed 250 CFM Blower System	18" ID Round - 20" OD	(2) 6"	1,900 LBS

See-through Models:

	Door Opening	Insulated Panel Dimensions	Framing Dimensions	Firebox (Cubic Ft)	Blowers	Class A Flue	Combustion Air Intakes	Total Weight
36	36" W x 21" H	51" W x 46" H x 35" D	55" W x 50" H x 35" D	8.75	Thermostatically Controlled Variable Speed 250 CFM Blower System	14" ID Round - 16" OD	(2) 4"	1,200 LBS
44	44" W x 26" H	59" W x 50" H x 35" D	63" W x 54" H x 35" D	13.2	Thermostatically Controlled Variable Speed 250 CFM Blower System	16" ID Round - 18" OD	(2) 5"	1,400 LBS
48	48" W x 42" H	63" W x 66 1/2" H x 42 1/2" D	67" W x 70 1/2" H x 42 1/2" D	24.5	Thermostatically Controlled Variable Speed 250 CFM Blower System	18" ID Round - 20" OD	(2) 6"	1,900 LBS

Single-sided Models:

	Door Opening	Insulated Panel Dimensions	Framing Dimensions	Firebox (Cubic Ft)	Blowers	Class A Flue	Combustion Air Intakes	Total Weight
36	36" W x 21" H	47" W x 45" H x 28" D	51" W x 49" H x 30" D	7.5	Thermostatically Controlled Variable Speed 250 CFM Blower System	12" ID Round - 14" OD	(1) 4"	1,000 LBS
44	44" W x 26" H	56 1/2" W x 50" H x 28" D	60 1/2" W x 54" H x 30" D	13.2	Thermostatically Controlled Variable Speed 250 CFM Blower System	14" ID Round - 16" OD	(1) 5"	1,200 LBS
48	48" W x 42" H	63" W x 66" H x 35 3/4" D	67" W x 70" H x 37 3/4" D	24.5	Thermostatically Controlled Variable Speed 250 CFM Blower System	16" ID Round - 18" OD	(1) 6"	1,700 LBS

Choose Your Hearthroom View.

SINGLE-SIDED MODELS: Perfect for wall or corner placements, it's the ideal way to enhance and warm any room.

SEE-THROUGH MODELS: Divide and create a distinctive focal point between two spaces with views on both sides.

INDOOR/OUTDOOR MODELS: The best of both worlds - attractive warmth inside, the perfect entertainment space outside.

VIEWING AREA SIZES: All Hearthroom fireplaces are available in 36", 44", and 48" viewing areas.

Hearthroom Venting

The Acucraft Hearthroom Series uses two separate air flow systems:

Combustion Flow:
To ensure an optimized and consistent burn, fresh outside air is drawn in for combustion and is then vented outside.

Room Circulation Flow:
To provide warmth, room air is drawn into the firebox, is heated, and is then circulated back into the room through the top heat vents.

Air flow direction is shown by the arrows and is color coded to represent temperature.

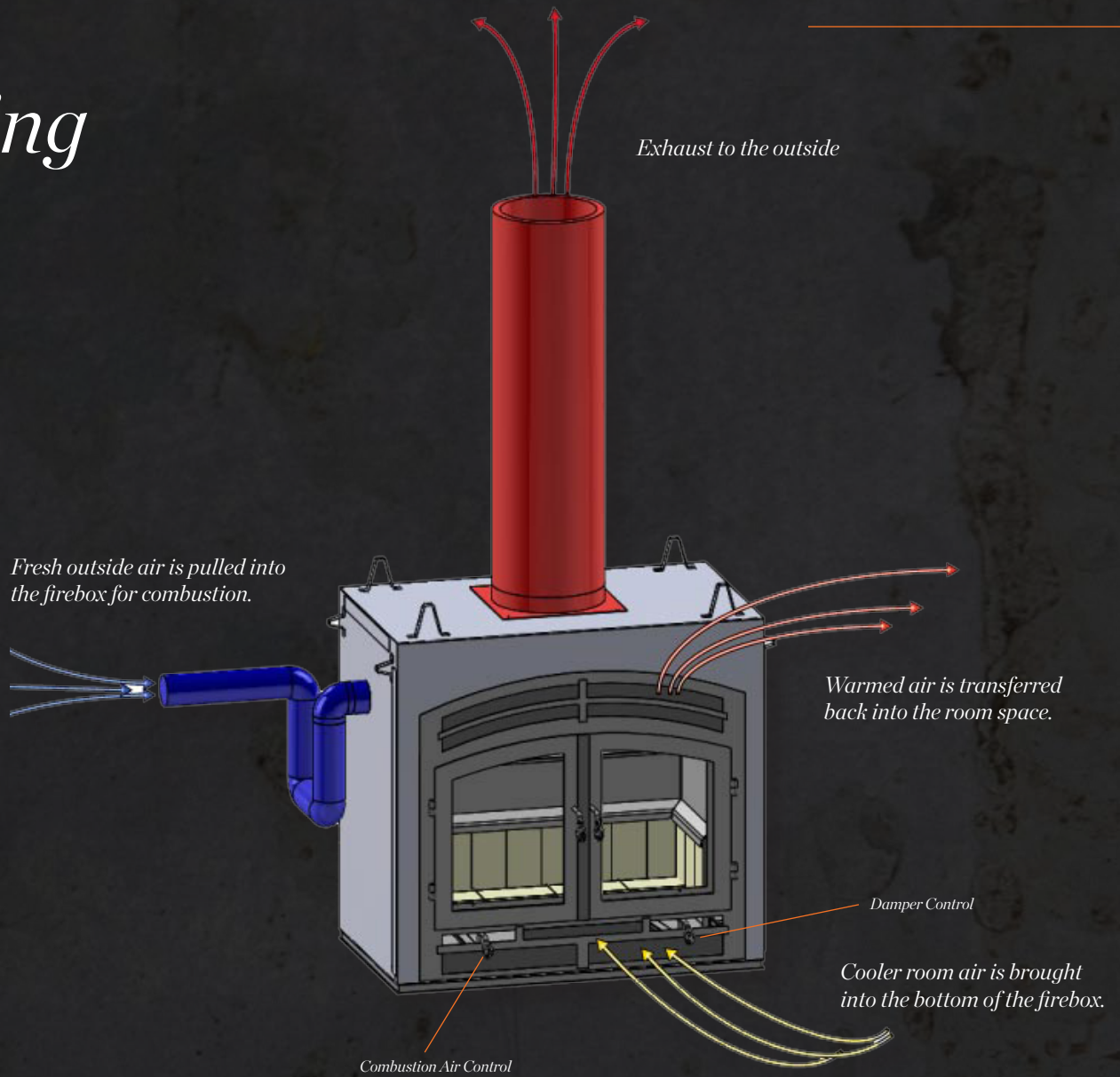

c LC us

Test & Listed to UL-127, CAN/ULC-S610

Wood-to-Gas Conversion

Every Hearthroom fireplace allows you to easily convert to natural gas or propane with the addition of an Acucraft logset.

Boasting the largest, fullest flames available, our logsets deliver the traditional look and feel of a natural wood burning fire without the mess.

Choose between three distinctive logsets - the rustic look of Weathered Oak; the added radiance of Charred Weathered Oak (not pictured); or the rugged stature of Driftwood. Each logset is hand painted and individually cast for a realistic look that's nearly indiscernible from the real thing.

Driftwood

Arizona Weathered Oak

The Hearthroom Wood Fireplace With Gas Logset

Available in 36", 44" and 48" viewing areas.

Fire Your Way

There's nothing quite like the sound and warmth of an open hearth fireplace. With our Hearthroom the choice is yours - doors closed, open, or completely removed — the flame is always perfect. Add an optional removable firescreen for protection from sparks and embers.

Color Options

*Make your wood-burning fireplace truly unique with one of our Patina finishes - each one is truly one-of-a-kind; or opt for our standard matte-black satin finish. *Photos are for example only, actual finishes may vary.*

Matte Black

Included standard satin, matte-black finish with high-temp paint.

Japanese Brown

Our most popular option. A 300-year-old process used for centuries on cast-iron tea pots.

Aged Bronze

Give your fireplace a more rustic appearance with this rich, smooth-textured finish.

Front & Door Styles

Arched or Rectangular

Select from arched or rectangular fronts and doors.

Standard

Standard style provides a smooth satin finish.
(Recommended with matte-black paint.)

Hammered

Hand-hammered look for a truly unique finish.
(Recommended with patina finish shown.)

Front & Door Styles

ACUCRAFT
Fire Reimagined.

Medieval

Decorative rounded clavos (rivet heads), styled hinges, and strapped corner joints. Available in your choice of Mission or Colonial (shown) grids.

Forged

Hand-hammered with softened edges for a rugged aesthetic. (Recommended with patina finish shown.)

Rustic

Corner strapping, decorative rounded clavos (rivet heads) for rustic style with any finish. (Show with patina.)

Options & Accessories

Mission Style Grids

Accent your fireplace with corner, mission-style grids that won't obstruct flame viewing areas.

Colonial Style Grids

Add window pane viewing to your fireplace with centered, colonial style grids.

Basket or Spring Handles

Locking Clasp

Available for our Indoor/Outdoor models; keep your home secure with a locking clasp for the exterior side of your fireplace.

Hearthroom 48 Single-Sided Wood Fireplace with Aged Bronze Patina, Forged Finish and Mission Grids

Hearthroom 44 Single Sided Wood Fireplace with Matte Black, Medieval Finish and Colonial Grids

Hearthroom 36 Indoor/Outdoor Wood Fireplace (exterior side) with Rectangular Front and Doors, Japanese Brown Patina, Spring Handles and Locking Clasp

ACUCRAFT
Fire Reimagined.

The Acucraft Difference.

The World's Best Fireplace Experience.

We're more than just another fireplace manufacturer...fire is in our DNA. Since 1979, we've been sharing our passion to reimagine fire and create the world's best fireplace experience. From start to finish and beyond, our team is here for you - any problem, any question, and time.

Certified

Hearthroom Series Fireplaces Are Ul-127 and Can/ UlC-S610 Certified.

Customized

Only Acucraft works directly with you to create a truly unique fireplace.

Handcrafted

Never mass-produced, each fireplace is meticulously, custom built.

Worldwide

Built in America and shipped directly to you, anywhere in the world.

Warranty

Keep the fire burning, each Acucraft firebox is backed by a Lifetime Warranty.

ACUCRAFT®
Fire Reimagined.

Bringing Families Together for Over 40 Years

Let's start a fire, together.

ACUCRAFT®
Fire Reimagined.

ACUCRAFT.com / Toll Free: (888) 317-6499 / info@acucraft.com
Fax: (763) 330-1598 / Office: (763) 247-6280
19672 172nd St., Big Lake, MN 55309

MADE
IN THE USA

©2023 Acucraft Fireplace LLC. All Rights Reserved.

c LC us

Indoor/Outdoor Installation/Operation Manual

DANGER

HOT GLASS WILL CAUSE BURNS.

DO NOT TOUCH GLASS UNTIL COOLED

NEVER ALLOW CHILDREN TO TOUCH GLASS

A barrier designed to reduce the risk of burns from the hot viewing glass is provided with this appliance and shall be installed for the protection of children and other at-risk individuals.

DANGER

VITRE CHAUDE – RISQUE DE BRÛLURES.

NE TOUCHEZ PAS UNE VITRE NON REFROIDIE.

NE LAISSEZ JAMAIS UN ENFANT TOUCHER LA VITRE.

L'écran pare-étincelles fourni avec ce foyer réduit le risque de brûlure en cas de contact accidentel avec la vitre chaude et doit être installé pour la protection des enfants et des personnes à risques.

Tested and Listed By:

c LC us

Conforms to:
UL127 (Ed 9)
CAN ULC-S610-2018

MADE IN THE USA

ACUCRAFT
Fire Reimagined.

TABLE OF CONTENTS

INTRODUCTION 4
SAFETY 7
LABEL 9
Section 1: Critical Information 13
1.1 Product Specifications 14
1.1.1 Arched Door 14
1.1.2 Rectangle Door 16
1.2 Component Illustration 18
1.3 Clearances 19
1.3.1 Side Wall Clearances 19
1.3.2 Finish Material Guidelines 20
1.3.3 Hearth Minimum Requirements 21
1.3.4 Mantel Minimum Requirements 22
1.4 Electrical Configuration 24
1.4.2 Blower Specifications, Electrical Box and Blower Locations 24
1.4.1 Blower and Electrical Access 24
Section 2: Installation Guide 27
2.1 Delivery 29
2.2 Support and Framing 29
2.2.1 Hearth Platform 29
2.2.2 Rectangular Framing 31
2.2.3 Framing for Gas Logset Conversion 32
2.2.4 Outdoor Wall Insulation 32
2.2.5 Insulating Chase Framing 33
2.3 Flue Installation 34
2.3.1 Important Flue Notes 34
2.3.2 Chase Top Example 35
2.3.3 Exposed Chase 36
2.3.4 Exposed Flue Pipe 37
2.3.5 Vaulted Ceiling Flue Pipe 38
2.3.6 ICC Flue Clearances 39
2.3.7 ICC Flue Components 39
2.3.8 ICC Offset Chart 42
2.3.9 Metal Fab Flue Clearances 43
2.3.10 Metal Fab Flue Components 43
2.3.11 Metal-Fab Offset Charts and Elbow Installation 46

TABLE OF CONTENTS

2.4 Air Intake Installation 50
2.4.1 Acucraft Provided Intake Kit Components 51
2.4.2 Intake Configurations 52
2.4.3 Intake Joint Connections 52
2.4.4 Combustion Air Exterior Installation 53
Section 4: Operations 55
4.1 First Fire 56
4.2 How to Start a Fire and Additional Product Information 57
4.3 Controls 58
Section 4: Optional Items 59
5.1 Gas Logset Conversion 60
5.2 Firescreen Installation 63
Section 4: Maintenance 65
4.1 Firebrick Replacement 66
4.2 Fireplace Cleaning 67
4.3 Door Maintenance 68
4.3.1 Glass and Gasket Replacement 68
4.3.2 Door Hinge Lubrication 69
4.3.3 Linkage Lubrication 70
4.4 Chimney Cleaning 71
4.5 Ash Removal 72
Section 5: Warranty 73

INTRODUCTION

This appliance and its components are designed to be installed and operated as a system. Any alteration to or substitution for items in this system, unless allowed by these installation instructions may void the warranty. It may also create a hazardous installation. Read through these instructions thoroughly before starting your installation and follow them carefully throughout your project.

This Acucraft wood burning fireplace comes mostly assembled and requires some simple, yet important installation procedures. Follow these guidelines carefully and address any questions directly to Acucraft.

Please review this manual carefully before installing your new fireplace.

ACUCRAFT®
Fire Reimagined.

19672 172nd Street
Big Lake, MN 55309

www.acucraft.com *(763) 247-6280*

1. **THE AUTHORITY HAVING JURISDICTION (SUCH AS MUNICIPAL BUILDING DEPARTMENT, FIRE DEPARTMENT, FIRE PREVENTION BUREAU, ETC.) SHOULD BE CONSULTED BEFORE INSTALLATION TO DETERMINE THE NEED TO OBTAIN A PERMIT.**
2. **THIS APPLIANCE IS HOT WHEN OPERATED AND CAN CAUSE SEVERE BURN IF CONTACTED. ANY CHANGES OR ALTERATIONS TO THIS APPLIANCE OR IT'S CONTROLS CAN BE DANGEROUS; AND IS PROHIBITED.**
3. Do not operate appliance before reading and understanding the operating instructions. Failure to operate appliance according to operating instructions could cause fire or injury.
4. Do not operate without fully assembling all components.
5. Do not install damaged, incomplete or substitute components.
6. Risks of cuts and abrasions. Wear protective gloves and safety glasses during installation. Sheet metal edges may be sharp.
7. Children and adults should be alerted to the hazards of high surface temperature and should stay away to avoid burns or clothing ignition. 48" from the fireplace is a safe and suitable distance.
8. Young children should be carefully supervised when they are in the same room as the appliance. Toddlers, young children and others may be susceptible to accidental contact burns. A physical barrier is recommended if there are at risk individuals in the house. To restrict access to an appliance or stove, install an adjustable safety gate to keep toddlers, young children and other at risk individuals out of the room and away from hot surfaces.
9. Clothing or other flammable material should not be placed on or near the appliance. Objects placed in front of the appliance must be kept a minimum of 48" away from the face of the appliance.
10. Due to high temperatures the appliance should be located out of traffic and away from furniture and draperies (approximately 48").
11. Even after the fire is out, the glass and/or screen will remain hot for an extended period of time.
12. This appliance must not be connected to a chimney flue pipe servicing a separate solid fuel burning appliance.
13. Do not expose the appliance to the elements (rain, snow, etc.) and keep the appliance dry at all times. Wet insulation will produce an odor.
14. The appliance is designed to burn natural dry wood only. Do not burn newspaper, treated wood, coal, charcoal, colored paper, cardboard, solvents or garbage.
15. Do not start a fire with chemicals or fluids such as gasoline, engine oil, etc.
16. Higher efficiencies and lower emissions generally result when burning air dried seasoned hardwoods, as compared to softwoods or too green or freshly cut hardwoods. Burning wet unseasoned wood can cause excessive creosote accumulation. When creosote is ignited it can cause a chimney fire that may result in a serious house fire.
17. Do not let the appliance become hot enough for any part to glow red
18. The system is designed to burn wood directly on the Acucraft supplied firebrick. Using an elevated grate or otherwise raising the fire can decrease your burn time and reduce efficiency.
19. Ensure clearance to combustibles is maintained when building a mantel or shelves above the appliance. Elevated temperatures on the wall or in the air above the appliance can cause melting, discoloration or damage to decorations, a TV, or other electronic components.
20. Operate the fireplace with doors fully open or fully closed only.
21. This appliance must not be connected to a chimney flue pipe servicing a separate solid fuel burning appliance.
22. Do not strike or slam shut the appliance glass doors.
23. A fireplace insert shall not be installed in this factory built fireplace.

24. Before installing this appliance, contact the local building or fire authority and follow their guidelines.
25. If this appliance is not properly installed, a house fire may result.
26. This appliance is hot when operated and can cause severe burns if contacted. Children and pets must be kept from touching the appliance when it is hot.
27. All wiring should be done by a qualified electrician and shall be in compliance with local codes and with the National Electric Code (NEC).
28. Use plenty of kindling to ensure the appliance quickly reaches a proper temperature. Once the kindling is burning rapidly, place a few larger pieces of wood onto the fire.
29. Burn only dry, clean unpainted wood that has been seasoned. It produces more heat and less soot or creosote. Freshly cut wood contains about 50% moisture while after proper seasoning only about 20% of the water remains. As wood is burned, this water boils off consuming energy that should be used in heating. The wetter the wood, the less heat is given off and the more creosote is produced.
30. Both hard wood and softwood burn equally well in this appliance but hardwood is denser and will weigh more per cord and burn a little slower and longer.

⚠ WARNING

NEVER LEAVE CHILDREN UNATTENDED WHEN THERE IS A FIRE BURNING IN THE APPLIANCE.

NEVER USE GASOLINE-TYPE LANTERN FUEL, KEROSENE, CHARCOAL LIGHTER FLUID, OR SIMILAR LIQUIDS TO START OR "FRESHEN UP" A FIRE IN THIS APPLIANCE. KEEP ALL SUCH LIQUIDS WELL AWAY FROM THE APPLIANCE.

**SPRAY FOAM INSULATION CAN NEVER BE IN CONTACT WITH CHIMNEY.
IF ANY SPRAY FOAM IS ON THE CHIMNEY, REPLACE THE CHIMNEY SECTIONS AND DISCARD PRIOR TO FIRST FIRE. SPRAY FOAM IS COMBUSTIBLE AND WILL CAUSE A FIRE.**

ALWAYS OPERATE THIS APPLIANCE WITH THE DOORS CLOSED AND LATCHED EXCEPT DURING START UP AND RE-FUELING OR WHEN USING FIRE SCREEN ALWAYS WEAR GLOVES TO PREVENT INJURY. DO NOT LEAVE THE FIRE UNATTENDED WHEN THE DOOR IS UNLATCHED OR WHEN USING A FIRESCREEN AS UNSTABLE WOOD COULD FALL OUT OF THE FIRE CHAMBER CREATING A FIRE HAZARD TO YOUR HOME.

BURNING YOUR APPLIANCE WITH THE DOORS OPEN OR AJAR CREATES A FIRE HAZARD THAT MAY RESULT IN A HOUSE AND OR CHIMNEY FIRE.

DO NOT STORE FUEL WITHIN THE CLEARANCE TO COMBUSTIBLES, OR IN THE SPACE REQUIRED FOR REFUELING AND ASH REMOVAL.

BURNING WET UNSEASONED WOOD CAN CAUSE EXCESSIVE CREOSOTE ACCUMULATION. WHEN IGNITED IT CAN CAUSE A CHIMNEY FIRE THAT MAY RESULT IN A SERIOUS HOUSE FIRE.

DO NOT BURN KILN DRIED LUMBER, CABINETRY SCRAPS OR ANY TYPE OF PLYWOOD OSB. THESE MATERIALS ARE DRIED TO A LOWER MOISTURE CONTENT AND WILL OVERHEAT THE FIREPLACE AND CHIMNEY, CAUSING DAMAGE AND VOID WARRANTY.

⚠ AVERTISSEMENT

NE JAMAIS LAISSER LES ENFANTS SANS SURVEILLANCE LORSQUE LE FEU BRÛLE DANS LE FOYER

NE JAMAIS UTILISER DE CARBURANT DE LAMPE DE TYPE ESSENCE, DE KÉROSÈNE, DE PRODUITS D'ALLUMAGE DU CHARBON, OU DE LIQUIDES SIMILAIRES POUR ALLUMER OU « RAVITAILLER » UN FEU DANS CET APPAREIL. GARDER TOUS CES LIQUIDES LOIN DE L'APPAREIL

L'ISOLATION EN MOUSSE PULVÉRISÉE NE DOIT JAMAIS ENTRER EN CONTACT AVEC LA CHEMINÉE. SI LA MOUSSE PULVÉRISÉE ENTRE EN CONTACT AVEC LA CHEMINÉE, REMPLACER ET ÉLIMINER LES SECTIONS AFFECTÉES AVANT LE PREMIER ALLUMAGE. LA MOUSSE PULVÉRISÉE EST INFLAMMABLE ET PEUT PROVOQUER UN INCENDIE

TOUJOURS UTILISER CET APPAREIL AVEC LES PORTES FERMÉES ET VERROUILLÉES, SAUF PENDANT L'ALLUMAGE ET LE RAVITAILLEMENT, OU LORS DE L'UTILISATION D'UN ÉCRAN PARE-ÉTINCELLES. TOUJOURS PORTER DES GANTS POUR ÉVITER LES BLESSURES. NE PAS LAISSER LE FEU SANS SURVEILLANCE LORSQUE LA PORTE EST DÉVERROUILLÉE OU LORS DE L'UTILISATION D'UN ÉCRAN PARE-ÉTINCELLES, PARCE QUE LE BOIS INSTABLE POURRAIT TOMBER DE LA CHAMBRE À FEU ET PROVOQUER UN RISQUE D'INCENDIE POUR VOTRE MAISON.

FAIRE FONCTIONNER L'APPAREIL AVEC LES PORTES OUVERTES OU ENTROUVERTES PROVOQUE UN RISQUE D'INCENDIE POUR LA CHEMINÉE OU LA DEMEURE

NE PAS ENTREPOSER LE CARBURANT DANS LE DÉGAGEMENT AUX COMBUSTIBLES, OU DANS L'ESPACE REQUIS POUR LE RAVITAILLEMENT ET L'ENLÈVEMENT DES CENDRES.

BRÛLER DU BOIS HUMIDE NON SÉCHÉ PEUT PROVOQUER UNE ACCUMULATION EXCESSIVE DE CRÉOSOTE. LORSQU'IL S'ALLUME, IL PEUT PROVOQUER UN FEU DE CHEMINÉE QUI PEUT PROVOQUER UN GRAVES INCENDIE DE MAISON.

NE PAS BRÛLER DU BOIS SÉCHÉ AU SÉCHOIR, DES REBUTS D'ARMOIRES OU TOUT TYPE DE CONTREPLAQUÉ OSB. CES MATÉRIAUX SONT SÉCHÉS À UNE TENEUR EN HUMIDITÉ INFÉRIEURE ET SURCHAUFFERONT LE FOYER ET LA CHEMINÉE, CAUSANT DES DOMMAGES ET ANNULANT LA GARANTIE.

LABEL

HEARTHROOM 36 INDOOR/OUTDOOR/ HEARTHROOM 36 INTERIEUR/EXTERIEUR Serial Number / Numéro de série: 90085-263

Model Number/ Numéro de modéle: HR-36-IO

SEE ACUCRAFT'S INSTALLATION AND OPERATING INSTRUCTIONS FOR THIS MODEL
VEUILLEZ CONSULTER LES INSTRUCTIONS D'ACUCRAFT POUR L'INSTALLATION ET LE FONCTIONNEMENT DE CE MODÈLE

MINIMUM CLEARANCES TO COMBUSTIBLES / DÉGAGEMENTS MINIMAUX PAR RAPPORT AUX MATÉRIAUX COMBUSTIBLES

Unit Back and Sides / Arrière et côtés de l'appareil :	2 in. / 51 mm
Unit Top / Dessus de l'appareil:	4 in. /102mm
Bottom of Unit / Bas de l'appareil:	0 in. / 0.0 mm
Minimum Mantel Height / Hauteur minimale de la cheminée :	12 in. above Top of Face Frame / 306 mm au-dessus du cadre frontal

MANUFACTURER:
FABRICANT:

Acucraft Fireplaces
19672 172nd St.
Big Lake, MN 55309
P: (763)263-3156

ACUCRAFT

FOLLOW INSTALLATION INSTRUCTIONS
CERTIFIED FOR UNITED STATES & CANADA
PER UL 127(Ed 9):2011 & CAN/ULC-S610-2018

DO NOT REMOVE THIS LABEL

SUIVRE LES INSTRUCTIONS D'INSTALLATION
CERTIFIÉE POUR LES ÉTATS-UNIS ET LE CANADA
EN VERTU DE UL 127(Ed 9):2011 & CAN/ULC-S610-2018

NE PAS ENLEVER CETTE ÉTIQUETTE

LabTest

c LC US

FOR USE WITH SOLID WOOD FUEL ONLY.

DO NOT OVERFIRE UNIT; This unit has been tested for use with a gas log set. Use Solid wood, composite fire logs or specified gas with approved log set burner only. Do not use a fireplace insert or other products not specified for use with the unit. Only use Chimneys listed in the Manual.

WARNING:
DO NOT USE THE FIREPLACE TO COOK OR WARM FOOD
WARNING:
Not for use in mobile homes and manufactured homes

CAUTION
HOT WHILE IN OPERATION! DO NOT TOUCH!
KEEP CHILDREN, CLOTHING AND FURNITURE AWAY READ THE MANUAL BEFORE OPERATING

ELECTRICAL SPECIFICATIONS
120 V AC: 1 AMP : 60 HZ

CAUTION:
ONLY UNVENTED GAS LOG SETS WHICH HAVE BEEN FOUND TO COMPLY WITH THE STANDARD FOR UNVENTED ROOM HEATERS, ANSI/ IAS/AGA Z21.11.2, ARE TO BE INSTALLED IN THIS FIREPLACE. DO NOT OPERATE A GAS LOG SET IN THIS FIREPLACE WITH THE CHIMNEY REMOVED. WHEN BURNING GAS, ADJUST DAMPER TO THE FULLY OPEN POSITION. SEE MANUAL FOR FURTHER INFORMATION.

À UTILISER UNIQUEMENT AVEC DU BOIS SOLIDE

NE PAS SURCHARGER L'APPAREIL; Cette unité a été testée pour être utilisée avec des bûches pour foyers à gaz. Utiliser du bois solide, des bûches en composite ou du gaz en combinaison avec les bûches pour foyers à gaz adéquates. Ne pas utiliser un foyer encastrable ou d'autres produits qui n'ont pas été conçus pour être utilisés avec l'unité. Utiliser uniquement les cheminées mentionnées dans le manuel.

AVERTISSEMENT :
NE PAS UTILISER LE FOYER POUR CUISINER OU FAIRE CHAUFFER LA NOURRITURE
AVERTISSEMENT :
Ne pas utiliser dans les maisons mobiles et les maisons préfabriquées.

PRÉCAUTION
CHAUD EN FONCTIONNEMENT! NE PAS TOUCHER!
GARDER LES ENFANTS, LES VÊTEMENTS ET LES MEUBLES À DISTANCE! LIRE LE MANUEL AVANT L'UTILISATION

PRÉCAUTION :
SEULES LES BÛCHES POUR FOYERS À GAZ QUI RESPECTENT LES NORMES ANSI/IAS/AGA Z21.11.2 POUR LES APPAREILS DE CHAUFFAGE NON VENTILÉS SERONT INSTALLÉES DANS CE FOYER. NE PAS UTILISER DES BÛCHES POUR FOYERS À GAZ DANS CE FOYER AVEC LA CHEMINÉE ENLEVÉE. EN UTILISANT DU GAZ, OUVRIR COMPLÈTEMENT LE CLAPET. CONSULTER LE MANUEL POUR PLUS DE RENSEIGNEMENTS.

RISK OF FIRE!

RISQUE D'INCENDIE!

MINIMUM 4" AIR SPACE CLEARANCE TO COMBUSTIBLES AND BUILDING MATERIALS MUST BE MAINTAINED.

GARDNER UN DÉGAGEMENT D'AU MOINS 10 CM (4") ENTRE L'ISOLATION ET LES MATÉRIAUX DE CONSTRUCTION INFLAMMABLES.

RISK OF FIRE!

RISQUE D'INCENDIE!

MINIMUM 2" AIR SPACE CLEARANCE TO COMBUSTIBLES AND BUILDING MATERIALS MUST BE MAINTAINED.

GARDNER UN DÉGAGEMENT D'AU MOINS 5 CM (2") ENTRE L'ISOLATION ET LES MATÉRIAUX DE CONSTRUCTION INFLAMMABLES.

LABEL

HEARTHROOM 44 INDOOR/OUTDOOR / HEARTHROOM 44 INTÉRIEUR/EXTÉRIEUR

Serial Number / Numéro de série: 90088-185

Model Number/ Numéro de modéle: HR-44-IO

SEE ACUCRAFT'S INSTALLATION AND OPERATING INSTRUCTIONS FOR THIS MODEL
VEUILLEZ CONSULTER LES INSTRUCTIONS D'ACUCRAFT POUR L'INSTALLATION ET LE FONCTIONNEMENT DE CE MODÈLE

MINIMUM CLEARANCES TO COMBUSTIBLES / DÉGAGEMENTS MINIMAUX PAR RAPPORT AUX MATÉRIAUX COMBUSTIBLES

Unit Back and Sides / Arrière et côtés de l'appareil :	2 in. / 51 mm
Unit Top / Dessus de l'appareil:	4 in. /102mm
Bottom of Unit / Bas de l'appareil:	0 in. / 0.0 mm
Minimum Mantel Height / Hauteur minimale de la cheminée :	12 in. above Top of Face Frame / 306 mm au-dessus du cadre frontal

MANUFACTURER:
FABRICANT:

Acucraft Fireplaces
19672 172nd St.
Big Lake, MN 55309
P: (763)263-3156

ACUCRAFT

FOLLOW INSTALLATION INSTRUCTIONS
CERTIFIED FOR UNITED STATES & CANADA
PER UL 127(Ed 9):2011 & CAN/ULC-S610-2018

DO NOT REMOVE THIS LABEL

SUIVRE LES INSTRUCTIONS D'INSTALLATION
CERTIFIÉE POUR LES ÉTATS-UNIS ET LE CANADA
EN VERTU DE UL 127(Ed 9):2011 & CAN/ULC-S610-2018

NE PAS ENLEVER CETTE ÉTIQUETTE

LabTest

c LC US

FOR USE WITH SOLID WOOD FUEL ONLY.

DO NOT OVERFIRE UNIT; This unit has been tested for use with a gas log set. Use Solid wood, composite fire logs or specified gas with approved log set burner only. Do not use a fireplace insert or other products not specified for use with the unit. Only use Chimneys listed in the Manual.

WARNING:
DO NOT USE THE FIREPLACE TO COOK OR WARM FOOD
WARNING:
Not for use in mobile homes and manufactured homes

CAUTION
HOT WHILE IN OPERATION! DO NOT TOUCH!
KEEP CHILDREN, CLOTHING AND FURNITURE AWAY READ THE MANUAL BEFORE OPERATING

ELECTRICAL SPECIFICATIONS
120 V AC: 1 AMP : 60 HZ

CAUTION:
ONLY UNVENTED GAS LOG SETS WHICH HAVE BEEN FOUND TO COMPLY WITH THE STANDARD FOR UNVENTED ROOM HEATERS, ANSI/ IAS/AGA Z21.11.2, ARE TO BE INSTALLED IN THIS FIREPLACE. DO NOT OPERATE A GAS LOG SET IN THIS FIREPLACE WITH THE CHIMNEY REMOVED. WHEN BURNING GAS, ADJUST DAMPER TO THE FULLY OPEN POSITION. SEE MANUAL FOR FURTHER INFORMATION.

À UTILISER UNIQUEMENT AVEC DU BOIS SOLIDE

NE PAS SURCHARGER L'APPAREIL; Cette unité a été testée pour être utilisée avec des bûches pour foyers à gaz. Utiliser du bois solide, des bûches en composite ou du gaz en combinaison avec les bûches pour foyers à gaz adéquates. Ne pas utiliser un foyer encastrable ou d'autres produits qui n'ont pas été conçus pour être utilisés avec l'unité. Utiliser uniquement les cheminées mentionnées dans le manuel.

AVERTISSEMENT :
NE PAS UTILISER LE FOYER POUR CUISINER OU FAIRE CHAUFFER LA NOURRITURE
AVERTISSEMENT :
Ne pas utiliser dans les maisons mobiles et les maisons préfabriquées.

PRÉCAUTION
CHAUD EN FONCTIONNEMENT! NE PAS TOUCHER!
GARDER LES ENFANTS, LES VÊTEMENTS ET LES MEUBLES À DISTANCE! LIRE LE MANUEL AVANT L'UTILISATION

PRÉCAUTION :
SEULES LES BÛCHES POUR FOYERS À GAZ QUI RESPECTENT LES NORMES ANSI/IAS/AGA Z21.11.2 POUR LES APPAREILS DE CHAUFFAGE NON VENTILÉS SERONT INSTALLÉES DANS CE FOYER. NE PAS UTILISER DES BÛCHES POUR FOYERS À GAZ DANS CE FOYER AVEC LA CHEMINÉE ENLEVÉE. EN UTILISANT DU GAZ, OUVRIR COMPLÈTEMENT LE CLAPET. CONSULTER LE MANUEL POUR PLUS DE RENSEIGNEMENTS.

LABEL

HEARTHROOM 48 INDOOR/OUTDOOR/ HEARTHROOM 48 INTÉRIEUR/EXTÉRIEUR

Serial Number / Numéro de série: 90091-044

Model Number/ Numéro de modéle: HR-48-IO

SEE ACUCRAFT'S INSTALLATION AND OPERATING INSTRUCTIONS FOR THIS MODEL
VEUILLEZ CONSULTER LES INSTRUCTIONS D'ACUCRAFT POUR L'INSTALLATION ET LE FONCTIONNEMENT DE CE MODÈLE

MINIMUM CLEARANCES TO COMBUSTIBLES / DÉGAGEMENTS MINIMAUX PAR RAPPORT AUX MATÉRIAUX COMBUSTIBLES

Unit Back and Sides / Arrière et côtés de l'appareil :	2 in. / 51 mm
Unit Top / Dessus de l'appareil:	4 in. /102mm
Bottom of Unit / Bas de l'appareil:	0 in. / 0.0 mm
Minimum Mantel Height / Hauteur minimale de la cheminée :	12 in. above Top of Face Frame / 306 mm au-dessus du cadre frontal

MANUFACTURER:
FABRICANT:

Acucraft Fireplaces
19672 172nd St.
Big Lake, MN 55309
P: (763)263-3156

ACUCRAFT

FOLLOW INSTALLATION INSTRUCTIONS
CERTIFIED FOR UNITED STATES & CANADA
PER UL 127(Ed 9):2011 & CAN/ULC-S610-2018

DO NOT REMOVE THIS LABEL

SUIVRE LES INSTRUCTIONS D'INSTALLATION
CERTIFIÉE POUR LES ÉTATS-UNIS ET LE CANADA
EN VERTU DE UL 127(Ed 9):2011 & CAN/ULC-S610-2018

NE PAS ENLEVER CETTE ÉTIQUETTE

LabTest

c LC US

FOR USE WITH SOLID WOOD FUEL ONLY.

DO NOT OVERFIRE UNIT; This unit has been tested for use with a gas log set. Use Solid wood, composite fire logs or specified gas with approved log set burner only. Do not use a fireplace insert or other products not specified for use with the unit. Only use Chimneys listed in the Manual.

WARNING:
DO NOT USE THE FIREPLACE TO COOK OR WARM FOOD
WARNING:
Not for use in mobile homes and manufactured homes

CAUTION
HOT WHILE IN OPERATION! DO NOT TOUCH!
KEEP CHILDREN, CLOTHING AND FURNITURE AWAY READ THE MANUAL BEFORE OPERATING

ELECTRICAL SPECIFICATIONS
120 V AC; 1 AMP : 60 HZ

CAUTION:
ONLY UNVENTED GAS LOG SETS WHICH HAVE BEEN FOUND TO COMPLY WITH THE STANDARD FOR UNVENTED ROOM HEATERS, ANSI/ IAS/AGA Z21.11.2, ARE TO BE INSTALLED IN THIS FIREPLACE. DO NOT OPERATE A GAS LOG SET IN THIS FIREPLACE WITH THE CHIMNEY REMOVED. WHEN BURNING GAS, ADJUST DAMPER TO THE FULLY OPEN POSITION. SEE MANUAL FOR FURTHER INFORMATION.

À UTILISER UNIQUEMENT AVEC DU BOIS SOLIDE

NE PAS SURCHARGER L'APPAREIL; Cette unité a été testée pour être utilisée avec des bûches pour foyers à gaz. Utiliser du bois solide, des bûches en composite ou du gaz en combinaison avec les bûches pour foyers à gaz adéquates. Ne pas utiliser un foyer encastrable ou d'autres produits qui n'ont pas été conçus pour être utilisés avec l'unité. Utiliser uniquement les cheminées mentionnées dans le manuel.

AVERTISSEMENT :
NE PAS UTILISER LE FOYER POUR CUISINER OU FAIRE CHAUFFER LA NOURRITURE
AVERTISSEMENT :
Ne pas utiliser dans les maisons mobiles et les maisons préfabriquées.

PRÉCAUTION
CHAUD EN FONCTIONNEMENT! NE PAS TOUCHER!
GARDER LES ENFANTS, LES VÊTEMENTS ET LES MEUBLES À DISTANCE! LIRE LE MANUEL AVANT L'UTILISATION

PRÉCAUTION :
SEULES LES BÛCHES POUR FOYERS À GAZ QUI RESPECTENT LES NORMES ANSI/IAS/AGA Z21.11.2 POUR LES APPAREILS DE CHAUFFAGE NON VENTILÉS SERONT INSTALLÉES DANS CE FOYER. NE PAS UTILISER DES BÛCHES POUR FOYERS À GAZ DANS CE FOYER AVEC LA CHEMINÉE ENLEVÉE. EN UTILISANT DU GAZ, OUVRIR COMPLÈTEMENT LE CLAPET. CONSULTER LE MANUEL POUR PLUS DE RENSEIGNEMENTS.

This page is intentionally left blank

Section 1: Critical Information

Section Includes

Product Specification
Component Illustration
Clearances
Electrical Configuration
Label

1.1 Product Specifications

1.1.1 Arched Door

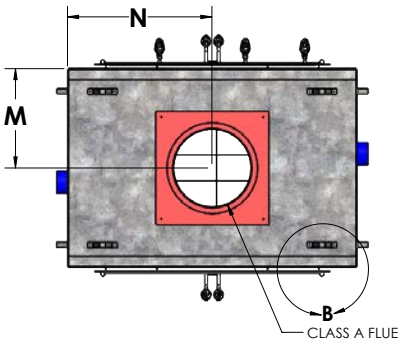

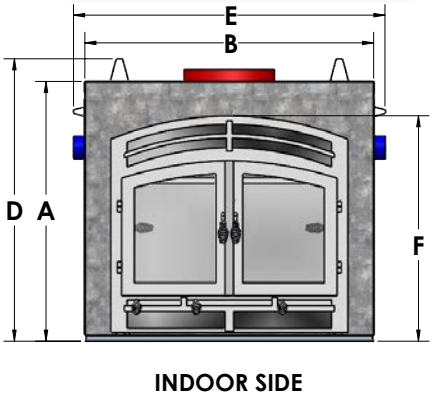

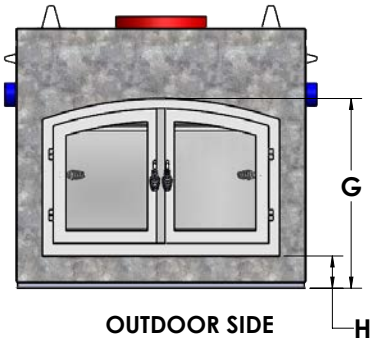

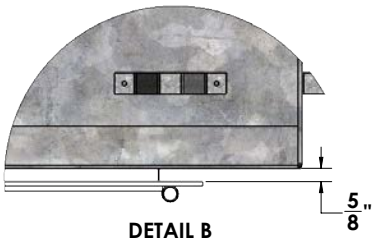

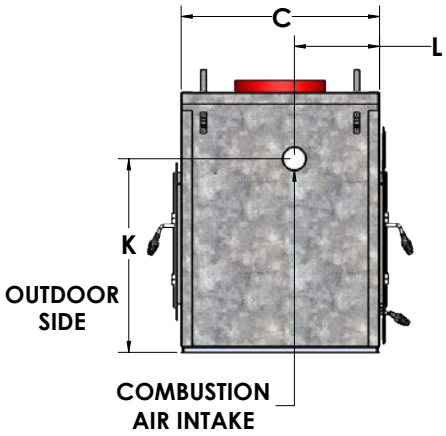

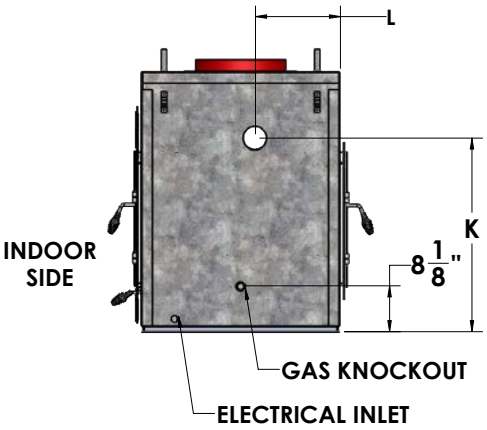

HR 36 I/O	
A	46”
B	51”
C	35”
D	50”
E	55”
F	40”
G	33 1/2”
H	5 7/8”
K	34 1/4”
L	15”
M	17 1/2”
N	25 1/2”

HR 44 I/O	
A	50”
B	59”
C	35”
D	54”
E	63”
F	45”
G	39”
H	5 7/8”
K	39 1/2”
L	14 1/2”
M	18”
N	29 1/2”

HR 48 I/O	
A	66 1/2”
B	63”
C	42 1/2”
D	70 1/2”
E	67”
F*	60 15/16”
G*	54 11/16”
H*	5 7/8”
K*	55 1/2”
L	14”
M	21 1/4”
N	31 1/2”

	Fireplace Weight (lbs)	Flue Size	Combustion Air Intake
HR 36 I/O	900	14”	4”
HR 44 I/O	1200	16”	5”
HR 48 I/O	1800	18”	6”

NOTE
See sections 2.3.6 and 2.3.9 for flue clearances.
All dimensions are ± 1/2”

CRITICAL INSTALLATION INFORMATION

NOTE

All dimensions are ± 1/2”

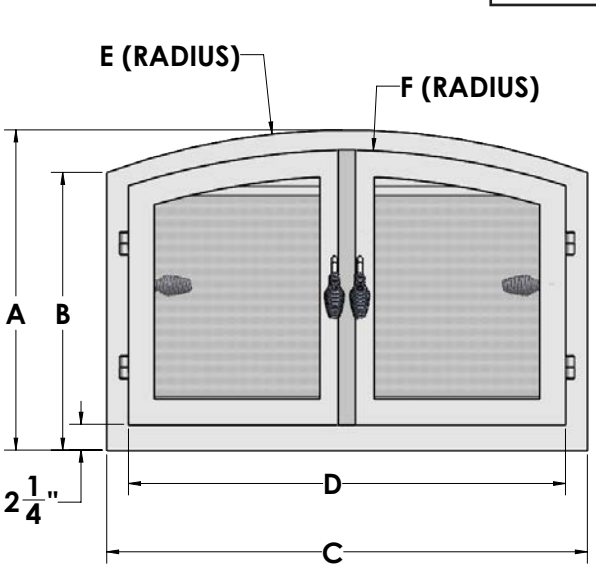

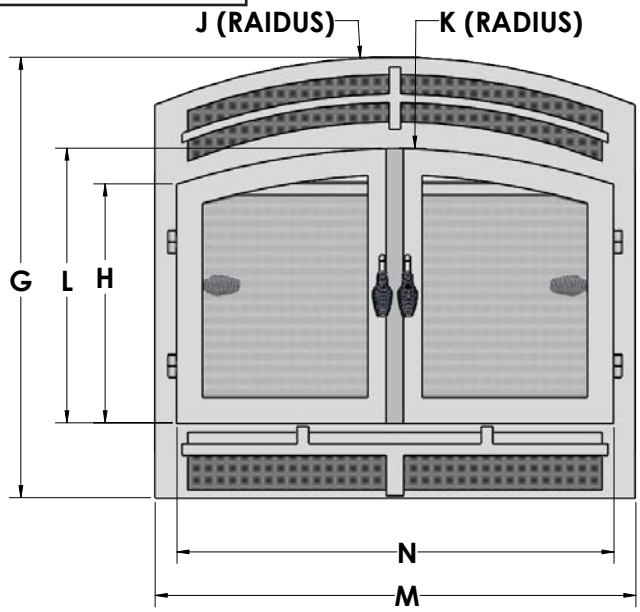

HR 36 I/O	
A	28”
B	24 1/8”
C	41 3/4”
D	38”
E*	60 15/16”
F*	58 1/4”
G	38 1/4”
H	24”
J*	54 7/8”
K*	58 1/4”
L	24”
M	41 3/4”
N	38”

HR 44 I/O	
A	33”
B	27 7/8”
C	49 3/4”
D	46 1/8”
E*	61 13/16”
F*	60 1/2”
G	43 1/4”
H	24 1/2”
J*	54 7/8”
K*	58 1/4”
L	29
M	49 3/4”
N	46 1/2”

HR 48 I/O	
A	49”
B	43”
C	53 3/4”
D	49 3/4”
E*	62 3/8”
F*	60 11/16”
G	53 15/16”
H*	39 1/2”
J*	66 5/16
K	60 11/16”
L	45”
M	53 3/4”
N	49 3/4”

CAUTION

Customer supplied trim, fascia, or other decorative material cannot impede the viewing area and shall not seal ventilation openings on the fireplace.

1.1.2 Rectangle Door

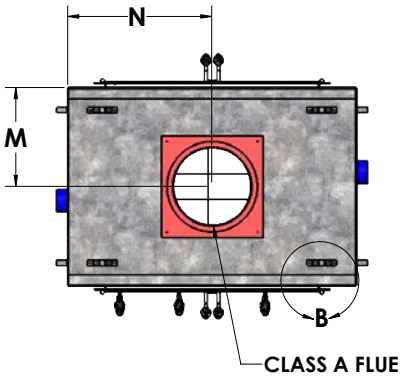

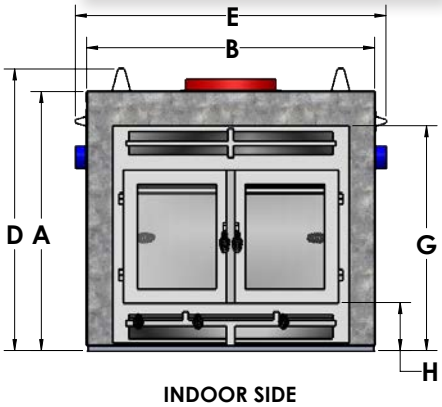

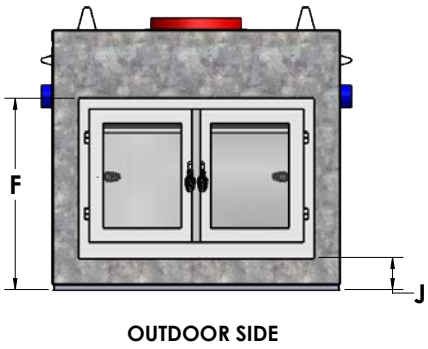

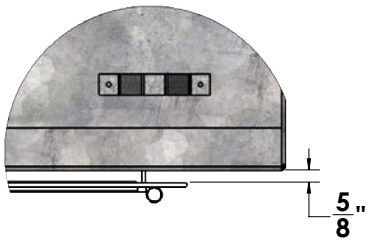

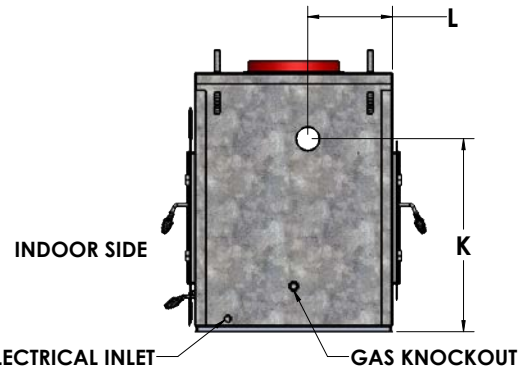

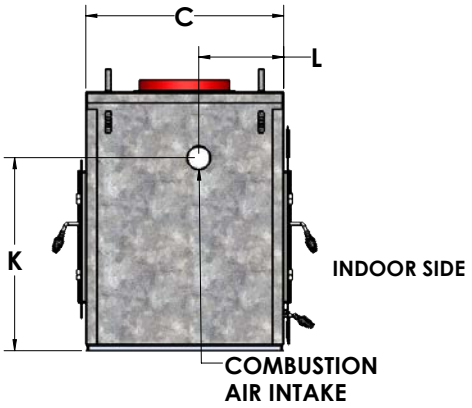

HR 36 I/O	
A	46”
B	51”
C	35”
D	50”
E	55”
F*	34 1/4”
G*	39 7/8”
H*	7 7/8”
J*	5 7/8”
K	34 1/4”
L	15”
M	17 1/2”
N	25 1/2”

HR 44 I/O	
A	50”
B	59”
C	35”
D	54”
E	63”
F	39”
G	44 7/8”
H	8 3/16”
J	5 7/8”
K	39 1/2”
L	14 1/2”
M	17 1/2”
N	29 1/2”

HR 48 I/O	
A	66 1/2”
B	63”
C	42 1/2”
D	70 1/2”
E	67”
F*	54 7/16”
G*	60 15/16”
H*	8 1/4”
J*	5 7/8”
K*	55 1/2”
L	14”
M	21 1/2”
N	31 1/2”

	Fireplace Weight (lbs)	Flue Size	Combustion Air Intake
HR 36 I/O	900	14”	4”
HR 44 I/O	1200	16”	5”
HR 48 I/O	1800	18”	6”

NOTE

See sections 2.3.6 and 2.3.9 for flue clearances.

All dimensions are ± 1/2”

CRITICAL INSTALLATION INFORMATION

NOTE
All dimensions are ± 1/2”

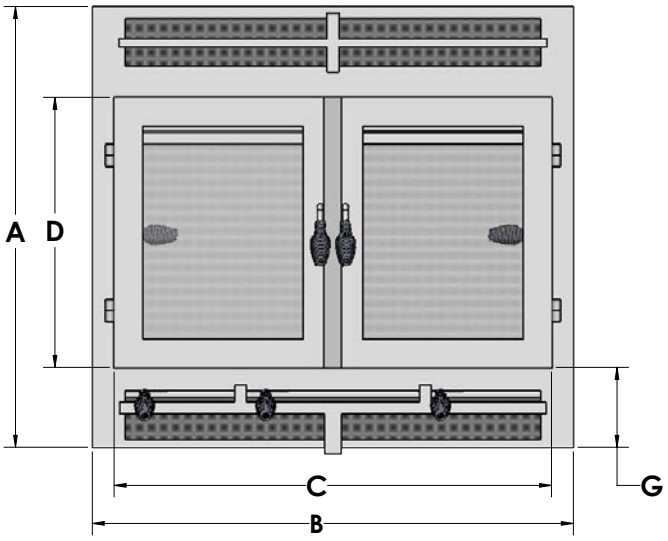

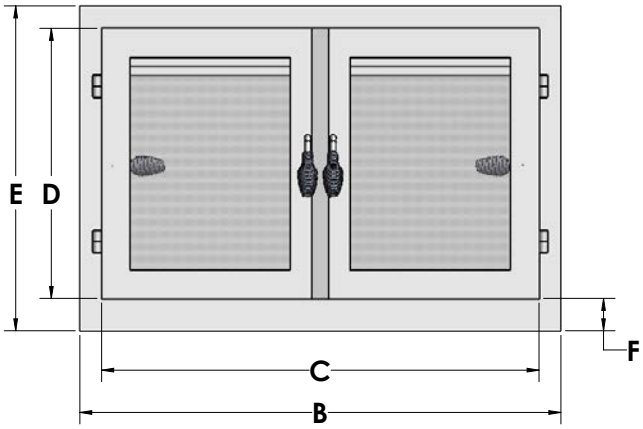

HR 36 I/O	
A	38 1/4”
B	41 3/4”
C	38”
D	23 1/2”
E	28”
F	3”
G	6 1/2”

HR 44 I/O	
A	43 1/4”
B	49 3/4”
C	46”
D	29”
E	38”
F	2 3/8”
G	6 1/2”

HR 48 I/O	
A	59 1/2”
B	53 3/4”
C	49 ”
D	45”
E	48 7/8”
F	2 1/2”
G	6 1/2”

CAUTION

Customer supplied trim, fascia, or other decorative material cannot impede the viewing area and shall not seal ventilation openings on the fireplace.

1.2 Component Illustration

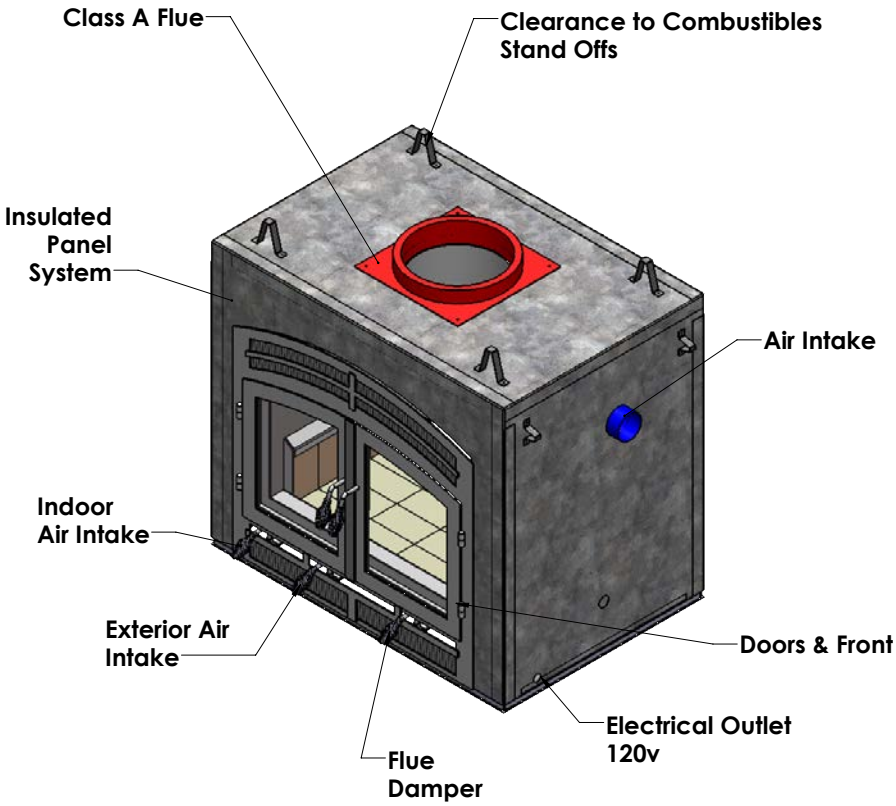

Indoor Side

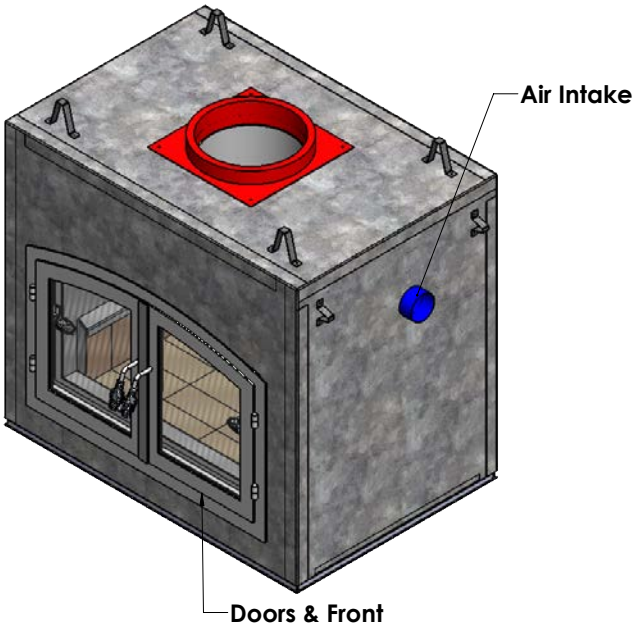

Outdoor Side

1.3 Clearances

MINIMUM CLEARANCE TO COMBUSTIBLES	MINIMUM CLEARANCE TO COMBUSTIBLES
Top	4”
Sides	2”
Bottom	0”
Back	2”

⚠ WARNING

RISK OF FIRE, MAINTAIN ALL SPECIFIED AIR SPACE CLEARANCES TO COMBUSTIBLES. FAILURE TO COMPLY WITH THESE INSTRUCTIONS MAY CAUSE A FIRE OR CAUSE THE APPLIANCE TO OVERHEAT. ENSURE ALL CLEARANCES (I.E. BACK, SIDE, TOP, VENT, MANTEL, FRONT, ETC.) ARE CLEARLY MAINTAINED.

WHEN USING PAINT OR LACQUER TO FINISH THE MANTEL, THE PAINT OR LACQUER MUST BE HEAT RESISTANT TO PREVENT DISCOLORATION.

1.3.1 Side Wall Clearances

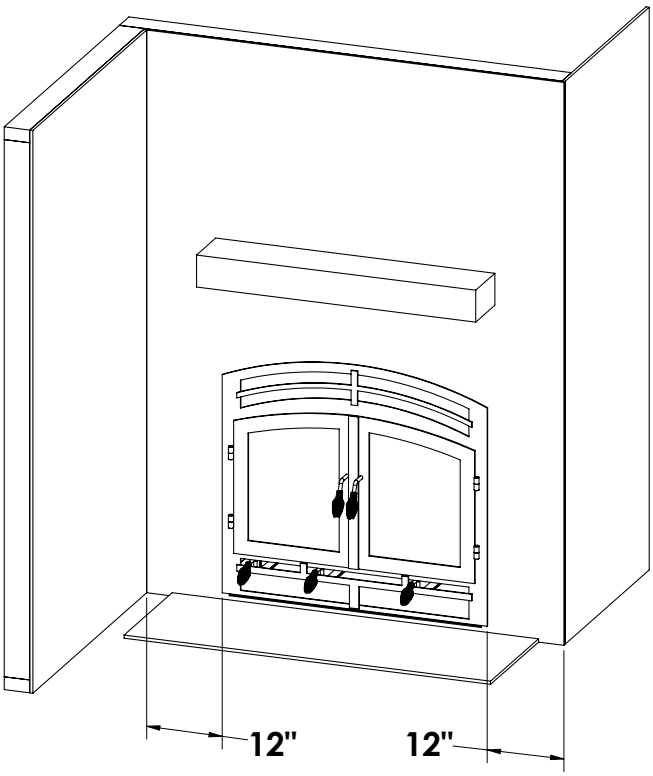

INDOOR SIDE

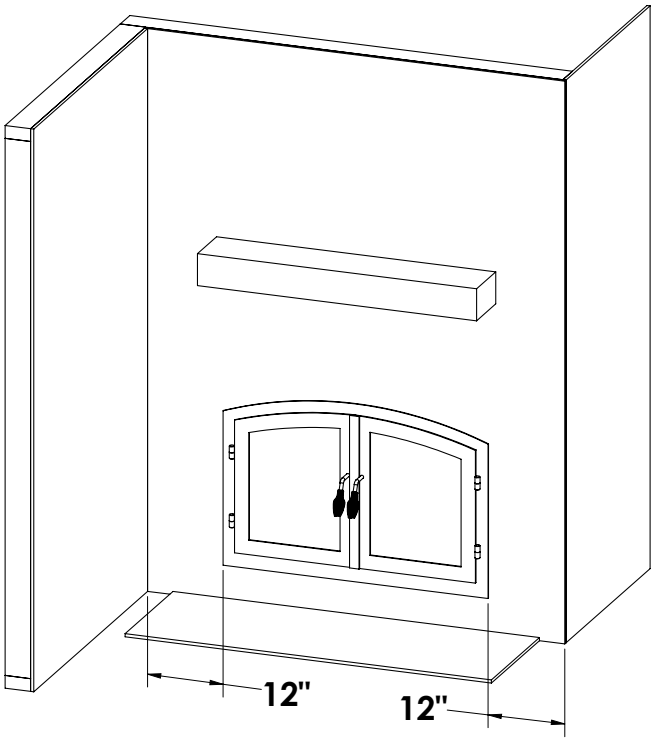

OUTDOOR SIDE

1.3.2 Finish Material Guidelines

1. Non-combustible materials only are permitted to be installed directly on the fireplace.
2. Gyp-board, drywall, etc. are considered combustible materials and cannot be placed directly onto the fireplace.
3. The fireplace will sit flush with the framing. Non-combustible material is then installed over the front of the fireplace, secure the non-combustible material to the framing, then over the front of the fireplace. The non-combustible finish material then can be installed using sheet metal screws directly to the sheet metal or cement board front of the fireplace. Space screws approximately 6”-8” apart.
4. Customer supplied trim, fascia, or other decorative material cannot impede the viewing area and shall not seal ventilation openings on the fireplace
5. **Screws cannot penetrate more than 1”.**

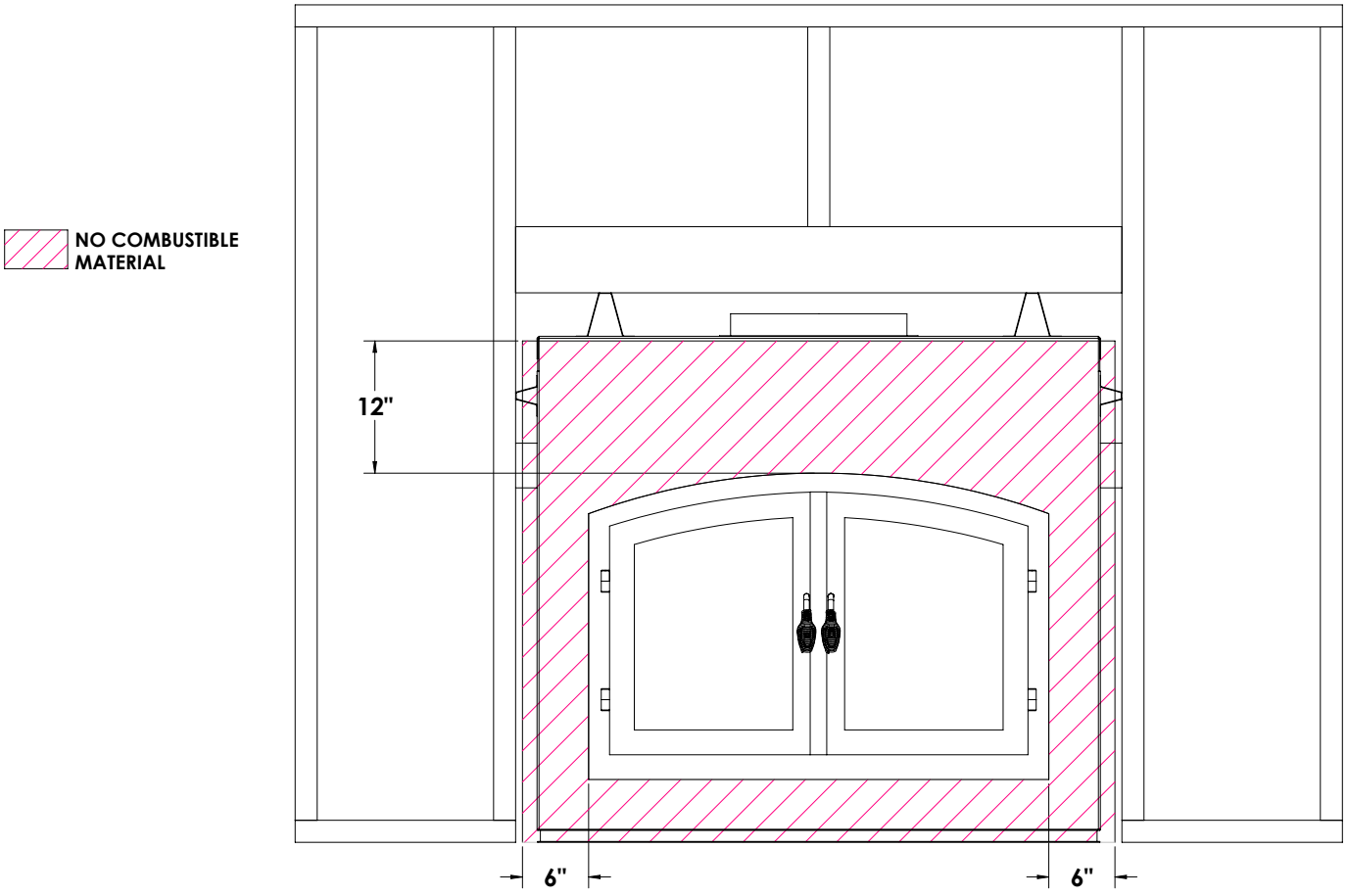

Example of Self Tapping Screws

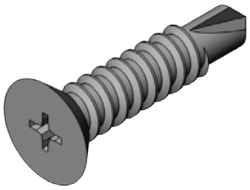

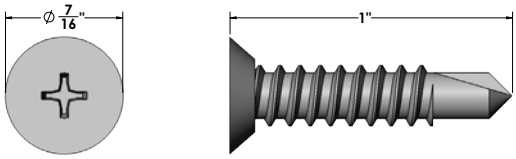

1.3.3 Hearth Minimum Requirements

Indoor Width Minimum Non-Combustible Hearth		
Model	**A**	**B**
HR 36 I/O	52”	18”
HR 44 I/O	60”	18”
HR 48 I/O	64”	20”

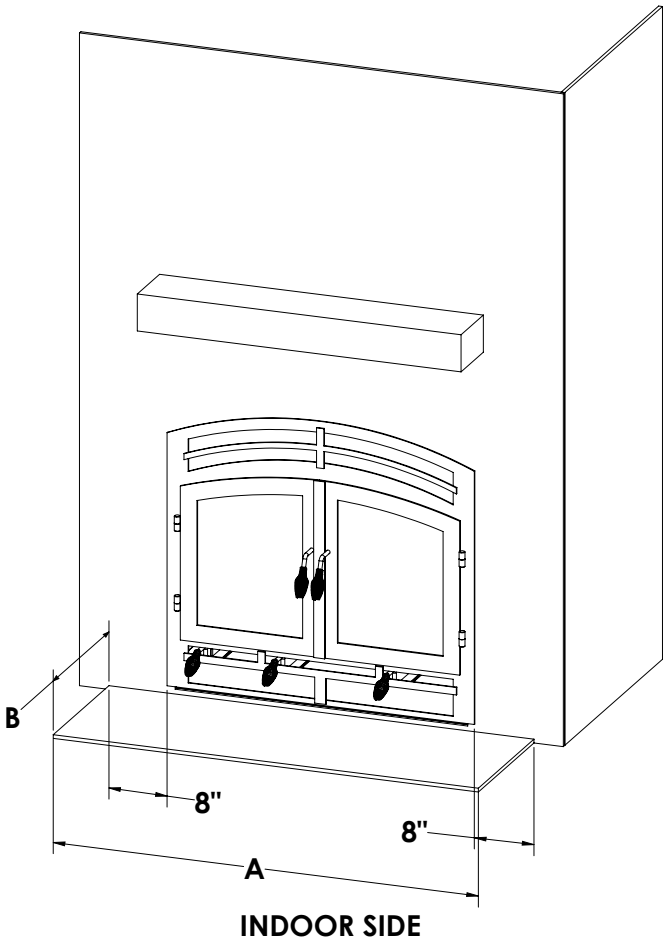

INDOOR SIDE

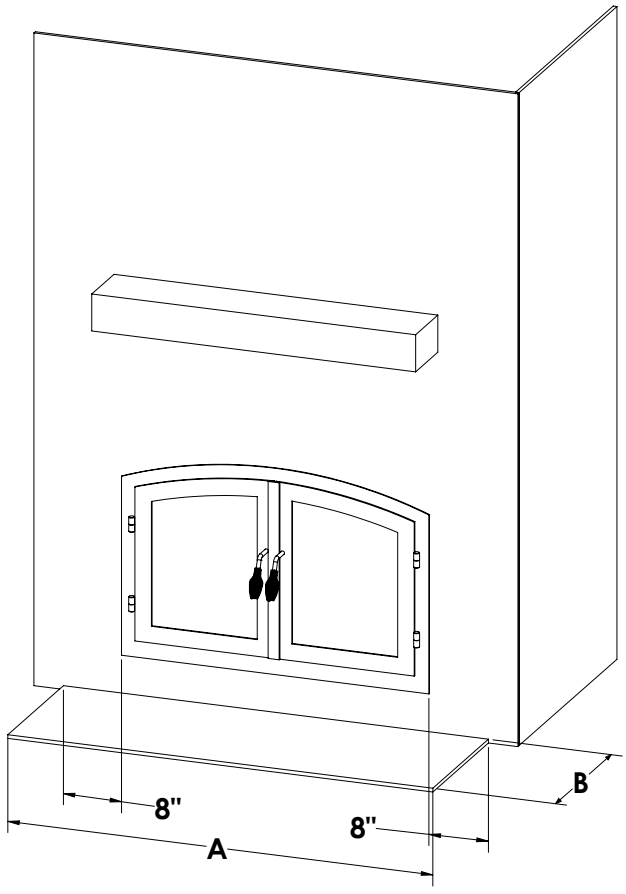

OUTDOOR SIDE

1.3.4 Mantel Minimum Requirements

COMBUSTIBLE mantels or any other combustible wall protrusions must be a minimum of 12” from the door frame of the fireplace indoors and a minimum of 12” from the door frame on the outdoor side.

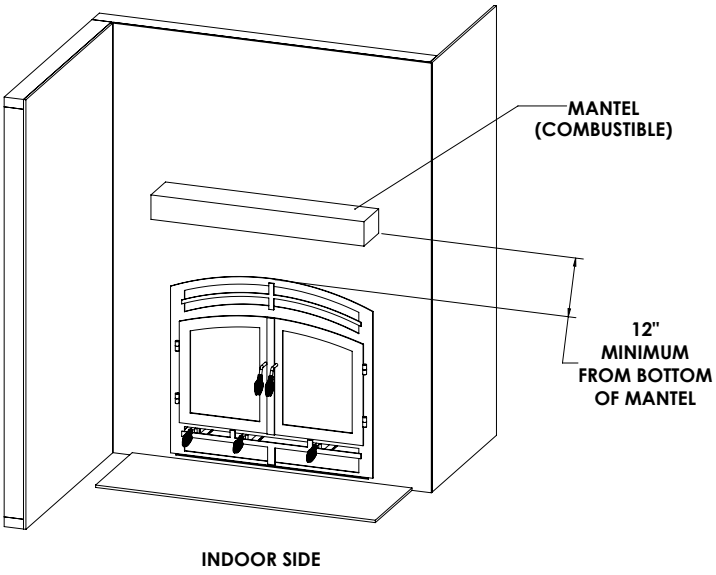

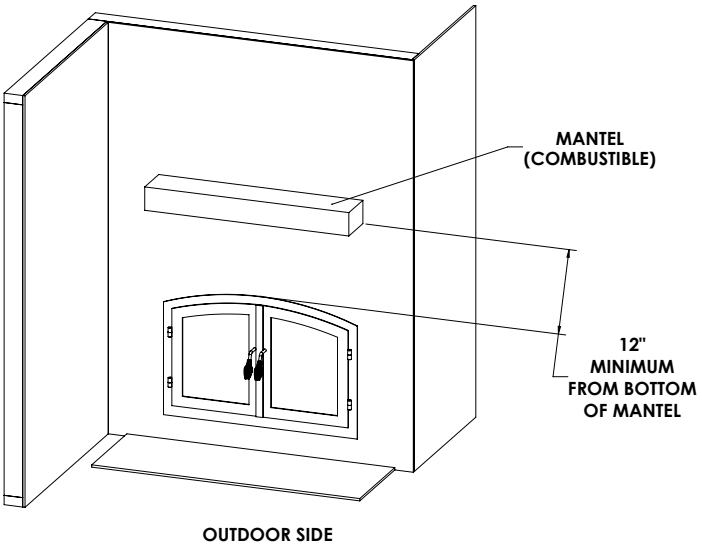

NON-COMBUSTIBLE mantels or any other non-combustible wall protrusions must be a minimum of 12” from the door frame of the fireplace indoors and a minimum of 12” from the door frame on the outdoor side.

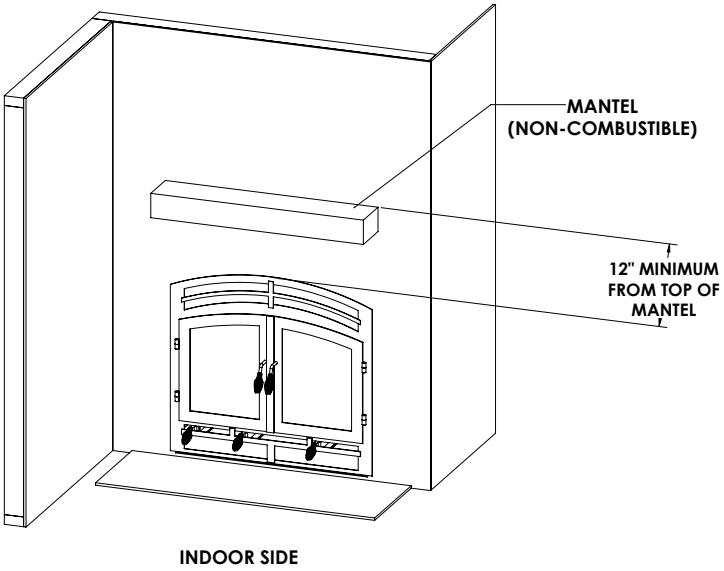

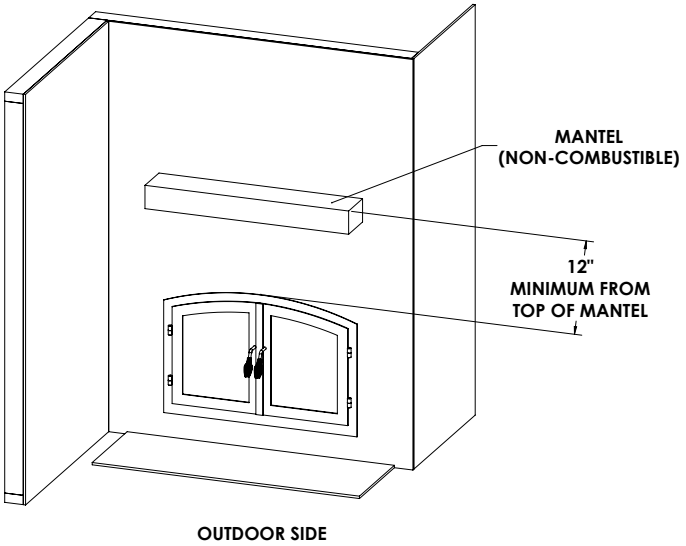

CRITICAL INSTALLATION INFORMATION

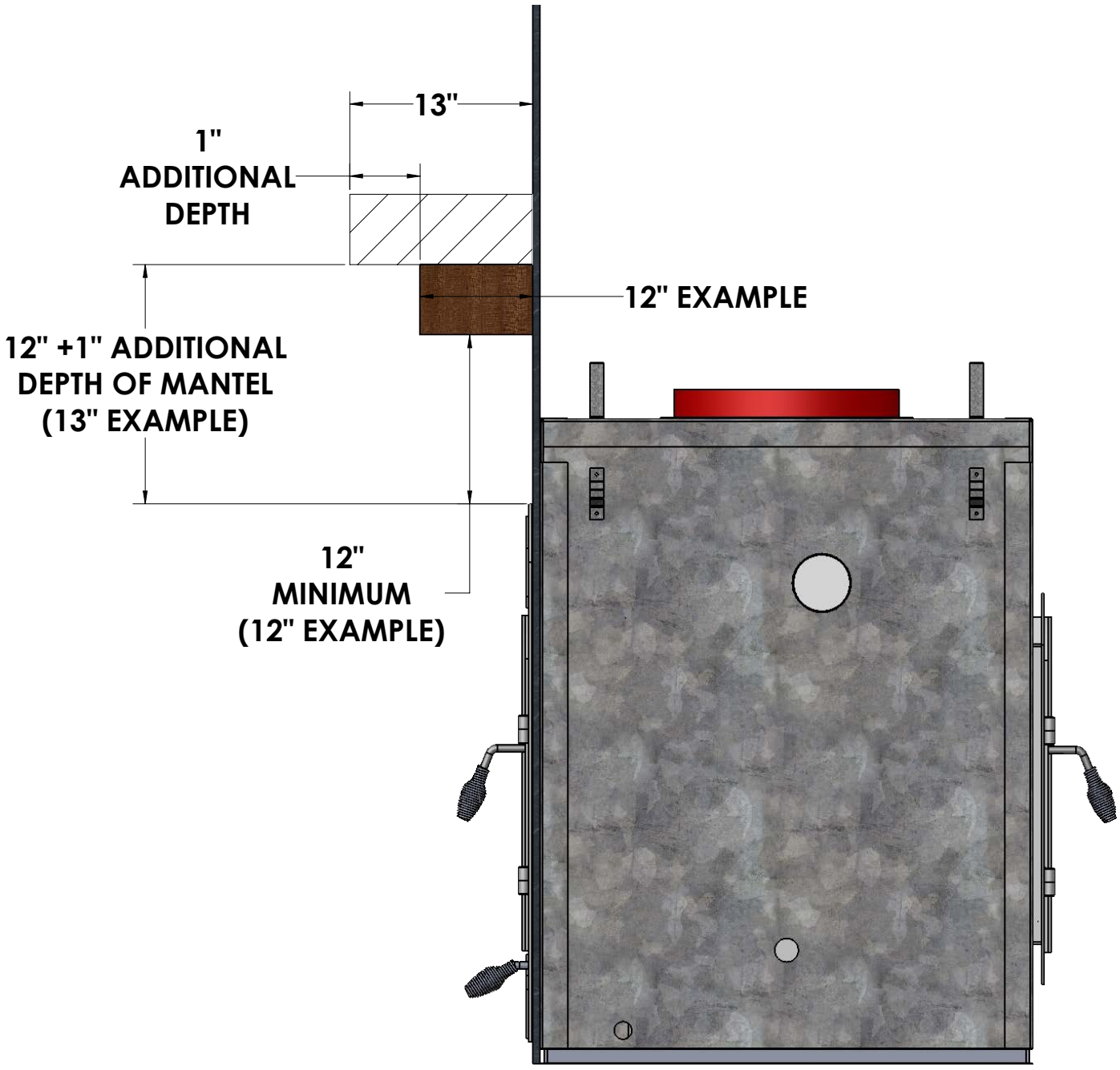

1.4 Electrical Configuration

1.4.1 Blower and Electrical Access

To access the blower motors, the lower front grate will need to be removed. There are a total of five (5) screws that hold the grate in place.

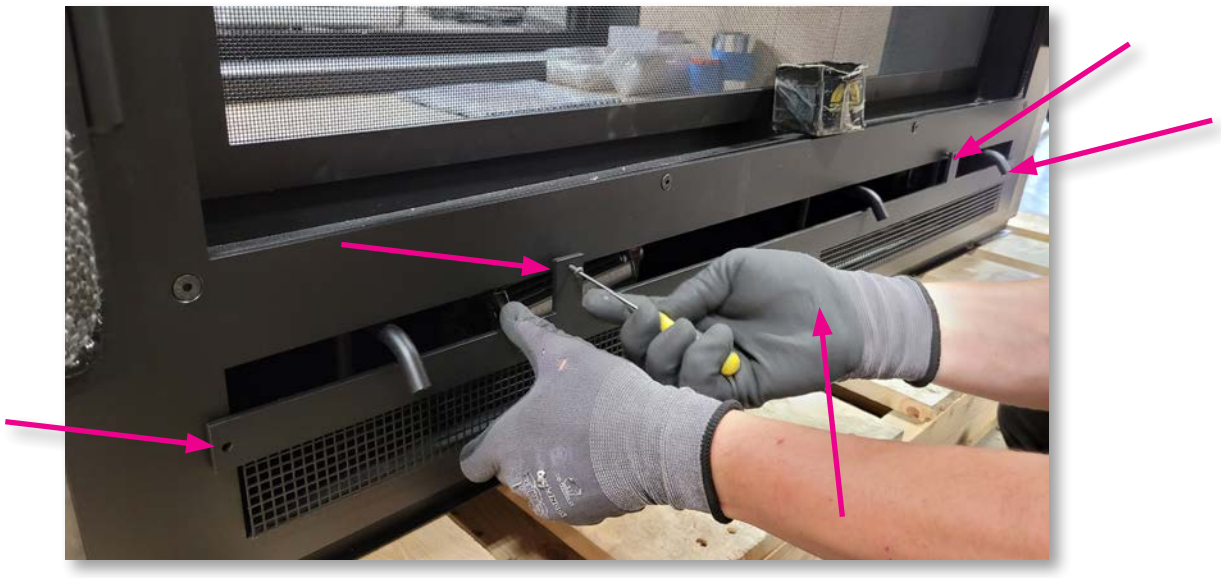

1.4.2 Blower Specifications, Electrical Box and Blower Locations

Blower Motor Specifications

Includes:

1. 2 Blower Motors
2. Thermo-disc - Allows power to blowers once approximately 100° F is reached.
3. High Temp Wiring Harness
4. Fan Speed Control Rheostat - Can be mounted in a convenient location near the fireplace.
5. On single sided units the blowers are located at the back to blow air up the back. Magnets come attached to the blowers. These magnets are attached to the insulated panels.
6. Add tie downs for wires to avoid contact with firebox.

Note: Wires should be routed around the perimeter of the fireplace base.

Electrical Specifications:
120 V AC; 1 AMP; 60 Hz

Blower Motor Location:

The blowers come installed inside the base of the fireplace. Magnetic base pads hold the blower to the bottom of the firebox. The blower WILL NOT turn on until the firebox is warm. The blowers will SHUT OFF when the fireplace cools down.

INSTALLER NOTE
To test blower functionality at install phase, you may have to bypass the thermo-disc to allow for blower motor operations when unit is cold.

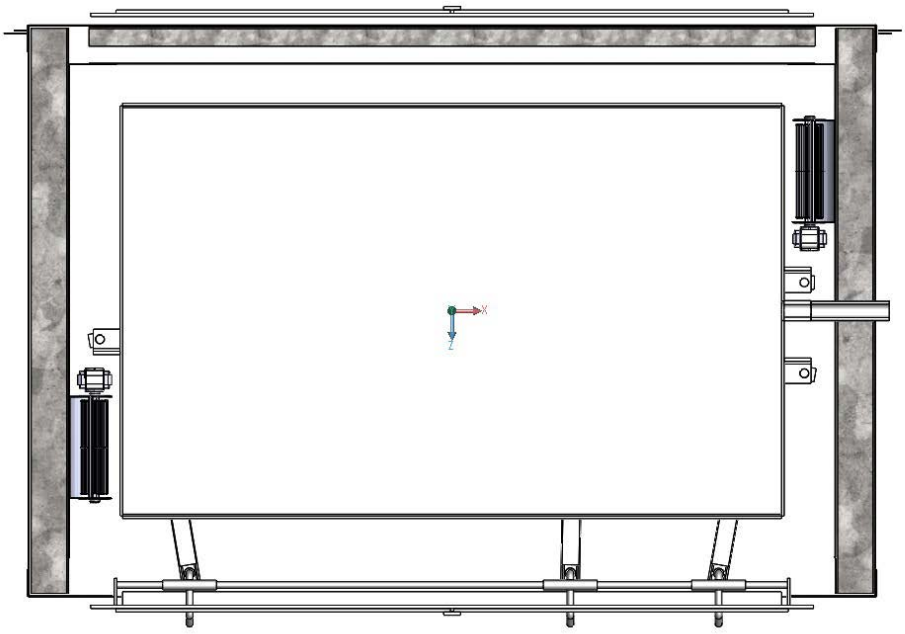

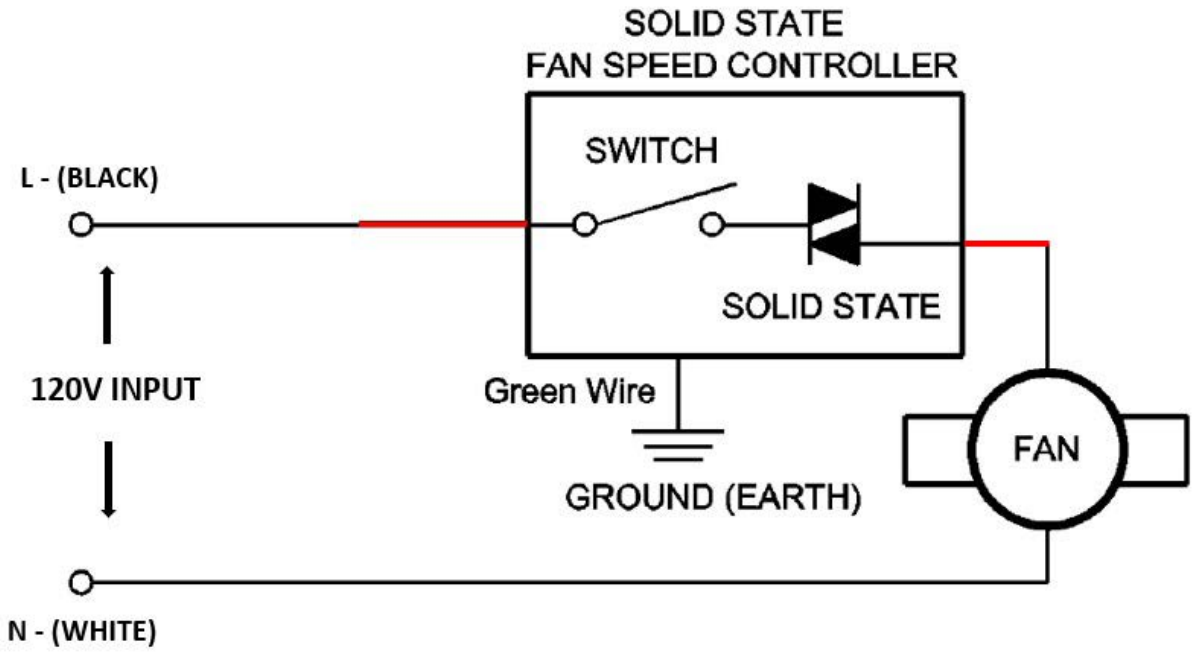

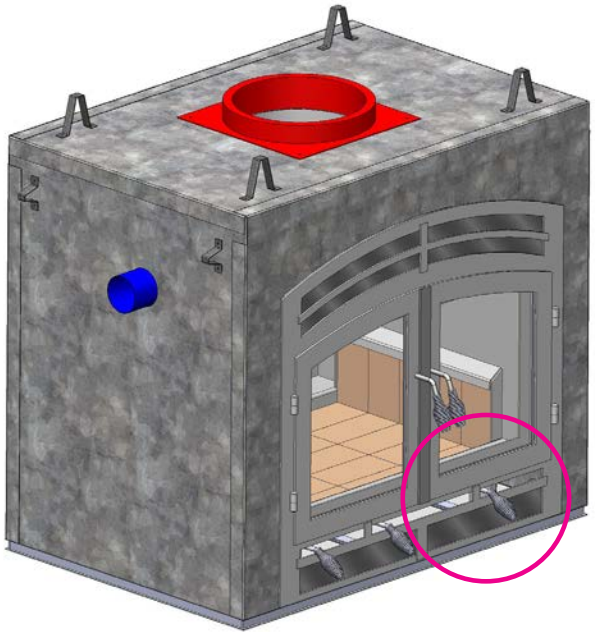

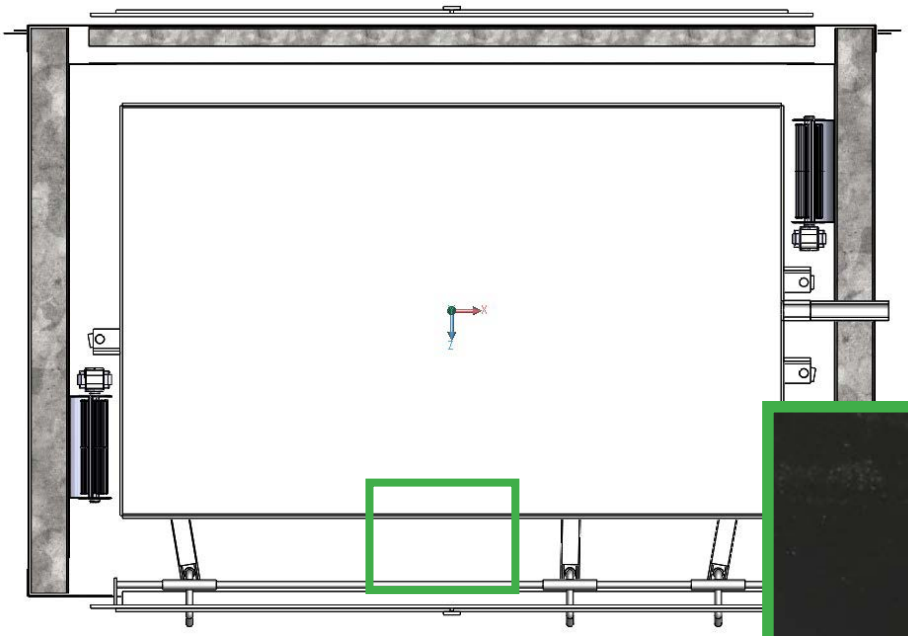

INSTALLER NOTE

Confirm that the thermo-disc is still secured and has not fallen during shipping

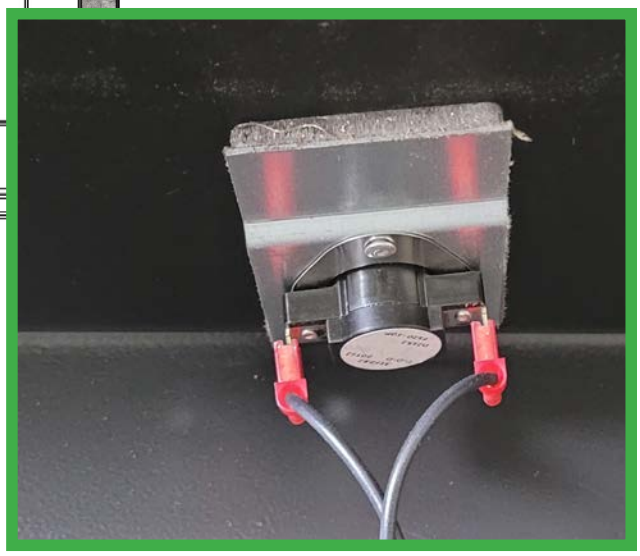

Section 2: Installation Guide

Section Includes

Framing Considerations
Delivery
Support and Framing
Flue Installation
Air Intake Installation

LOCATION CONSIDERATION

1. Consideration should be given as to the proper location of the fireplace, such as heat circulation throughout the home, inlet combustion air vent, obstructions from the chimney, clearances to combustibles, access to wood supply, etc. The fireplace may be used as a room divider, installed along a wall or used in an exterior chase.
2. Place the unit in desired location. This unit may be placed on any flat combustible or non-combustible floor surface without carpeting or linoleum.
3. The fireplace is designed to sit on a wood floor or platform and can be framed with wood studs at the proper clearance.
4. Locating the fireplace in the basement, near frequently opened doors, central heat outlets or returns, or other locations of considerable air movement can affect the performance. If the fireplace is installed on an exterior wall, the wall must be insulated just like any other wall in your home, if it is not, you will have a cold air transfer. Outside air must be used for combustion. Consideration should be given to these factors before deciding on a location. An cold air trap is recommended. See section 2.4 for intake set up with air trap.
5. DO NOT USE CONSTRUCTION ADHESIVE OR ANY TYPE OF GLUES
6. SHEETROCK (DRYWALL) IS CONSIDERED COMBUSTIBLE AND CANNOT BE USED.
7. The area within the framing dimensions cannot have any combustible materials, must use stone, brick or tile, or any materials with a UL/3rd party listing stating its non-combustible.
8. DO NOT MORTAR THE FACE FRAME IN PLACE, OR INSTALL FINISH THAT OVERHANGS THE FACE.

⚠ WARNING

IN ORDER TO AVOID THE POSSIBILITY OF EXPOSED INSULATION OR VAPOR BARRIER COMING IN CONTACT WITH THE APPLIANCE BODY, IT IS RECOMMENDED THAT THE WALLS OF THE APPLIANCE ENCLOSURE BE “FINISHED” (I.E. CEMENT BOARD), AS YOU WOULD FINISH ANY OTHER OUTSIDE WALL OF A HOME. THIS WILL ENSURE THAT CLEARANCE TO COMBUSTIBLES IS MAINTAINED IN THE CAVITY.

OBJECTS PLACED IN FRONT OF THE APPLIANCE MUST BE KEPT AT A MINIMUM OF 48” AWAY FROM BOTH VIEWING FRONTS OF THE APPLIANCE.

DO NOT PACK REQUIRED AIR SPACES WITH INSULATION OR OTHER MATERIALS.

2.1 Delivery

Verify all components at delivery and inspect to make sure that no components are damaged. Refer to your packing slip that all components have been delivered.

2.2 Support and Framing

2.2.1 Hearth Platform

FIREPLACE SUPPORT

Typically, the fireplace is supported without a concrete foundation. The fireplace, flue and stone are supported by the engineered floor trusses. Please verify bearing weight with the supplier of the floor trusses or with a structural engineer, as some completed fireplace structures, due to weight, may require additional support footings.

NOTE: The appliance is not designed to support bearing weight.

FIREPLACE PLATFORM

1. Fireplaces should be supported with an adequately designed platform. This platform may consist of 2 x 6 framing with a plywood top. The fireplace is designed to sit on a wood platform.
2. The fireplace can be set at any desired height with a raised hearth, or set flat on the floor. Many customers choose a raised hearth with a height of 12” - 18” for seating. The exposed face on the fireplace is raised up off the bottom of the fireplace. Depending on the thickness of the hearth materials, you may need different platform height for the fireplace and a separate height for the hearth.
3. The hearth extension must be of noncombustible material. Minimum requirements require the hearth to extend 8” on either side of the fireplace opening and 18” or 20” in front. See section 1.3.2.

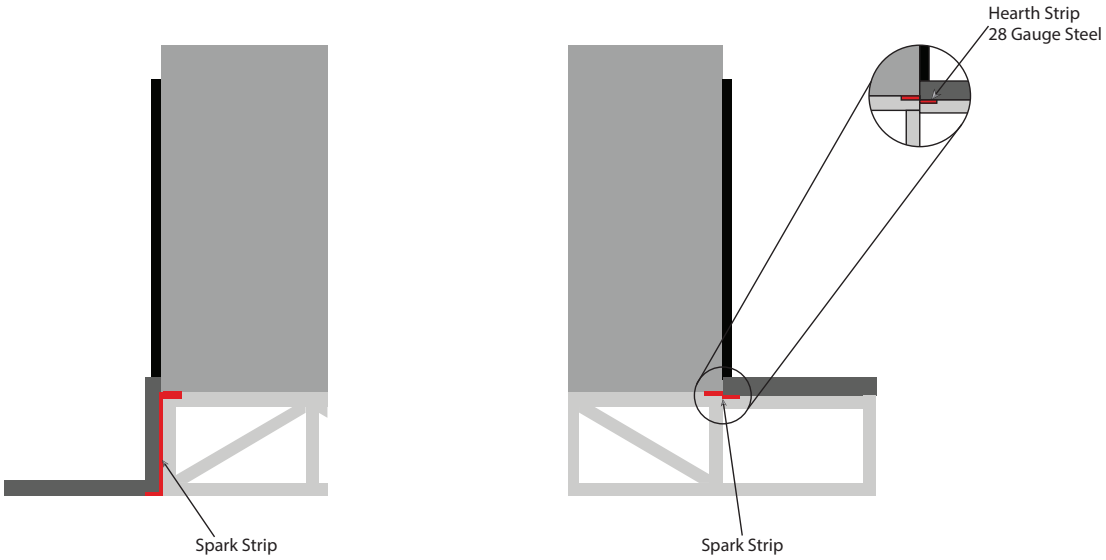

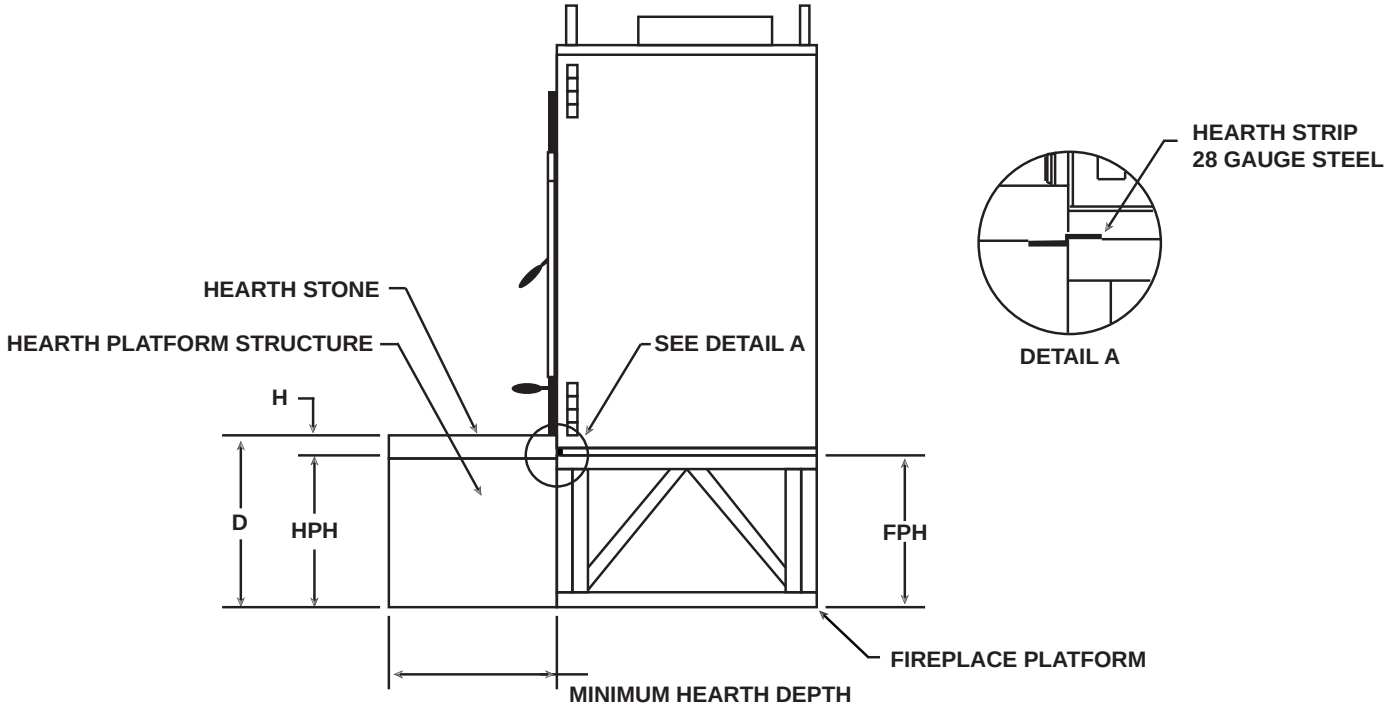

For easy calculation of your hearth platforms and your fireplace platform, consider the following formula:

Desired Hearth Height	D
Hearthstone Thickness	H
Fireplace Platform Height	FPH
Hearth Platform Height	HPH
FPH = D -" and **HPH** = D - H	

For example, if you wish to have an 18" hearth, and your hearthstone is a typical 2" hearthstone, your calculation would be as follows:

D = 18"	H = 2"
Fireplace Platform (FPH) = 16 1/8"	18" - 1 7/8" = **16 1/8"**
Hearth Platform (HPH) = 16"	18" - 2" = **16"**

In this example, your Fireplace Platform would be 16 1/8" high and your Hearth Platforms would be 16" high.
Note: *Mesh and/or mortar bed need to be considered in hearth thickness.*

A metal hearth strip is required a minimum of 1" under the fireplace and 1" under the hearth. The hearth strip is required to block any sparks that could fall between the fireplace and the hearth. A minimum width is required 8" each direction of the fireplace opening. The hearth strip is designed to be covered by the fireplace and the other half is covered by the non-combustible hearth. Recommend roofing nails to attach to the platform, due to the minimum height of the nail head.
In some installs it may be required to have hearth strip that has bends to wrap under the fireplace, down a platform and under the hearth. This can be done with several pieces of metal, and is typically covered with stone, brick, or cement board.

Minimum Framing Dimensions

2.2.2 Rectangular Framing

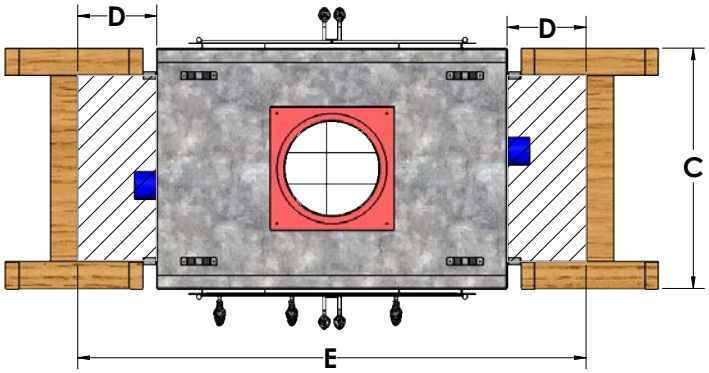

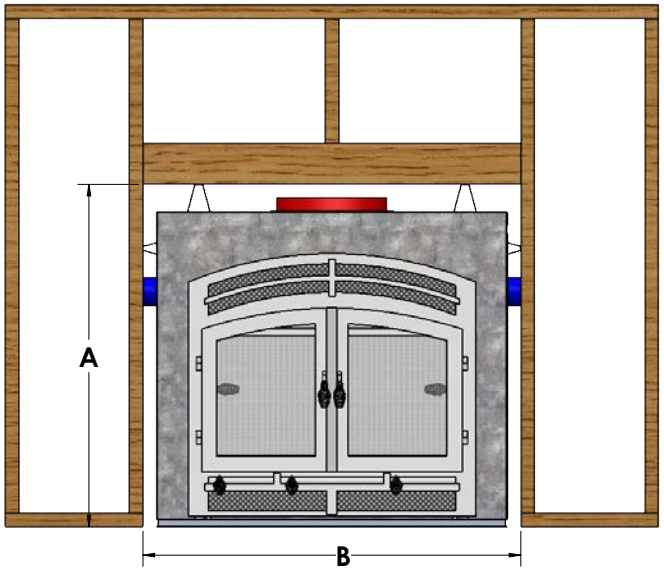

INSTALLER NOTE

SPACE REQUIRED FOR COMBUSTION AIR INTAKES ON BOTH SIDES IMMEDIATELY OFF FIREPLACE. (HATCHED AREA)

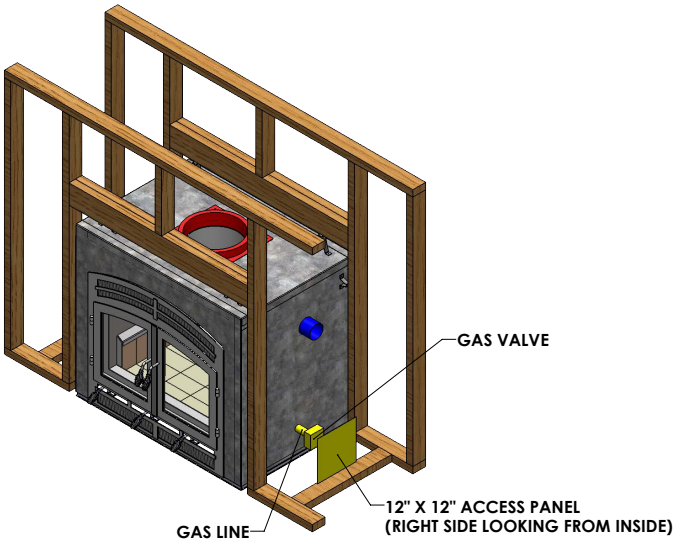

INSTALLER NOTE

IF CONVERTING TO GAS IN THE FUTURE, A 12” X 12” ACCESS PANEL NEEDS TO BE FRAMED IN

	A (ICC Flue)	A (Metal Fab Flue)	B	C	D	E
36IO	50”	58 1/2”	55”	35”	9 1/2”	70”
44IO	54”	62 1/2”	63”	35”	10 1/2”	80”
48IO	70 1/2”	79”	67”	42 1/2”	11 1/2”	86”

* Additional height is required above the fireplace framing for Metal Fab draft hood connector to slide into the cavity. Framing needs to be 8 1/2” minimum above the top of the fireplace itself.

INSTALLER NOTE

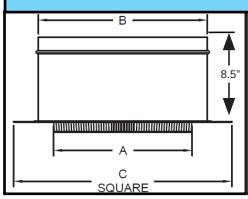

Note: Metal Fab draft hood connector is TALLER than the ICC anchor plate and framing must be accounted for this extra height

2.2.3 Framing for Gas Logset Conversion

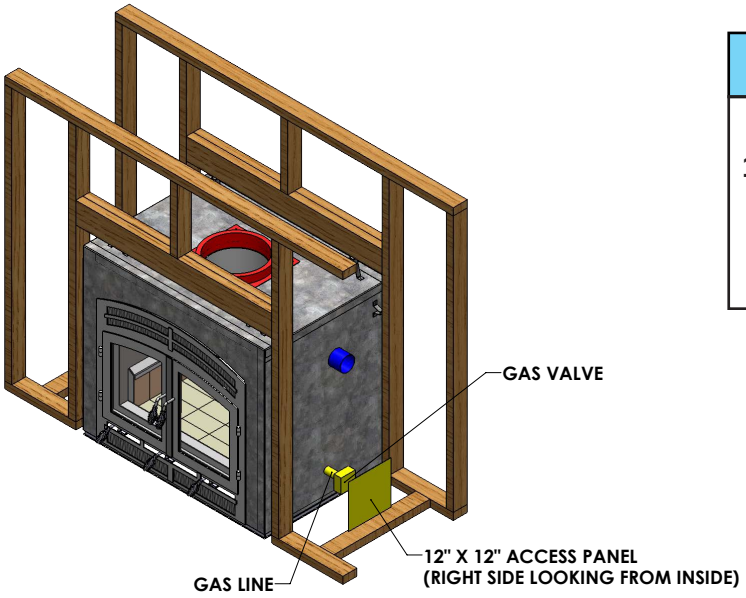

INSTALLER NOTE

FOR GAS LOGSET CONVERSION, A 12” X 12” ACCESS PANEL MUST BE INSTALLED. GAS VALVE MUST BE INSTALLED OUTSIDE OF THE FIREPLACE AND WITHIN 36” OF THE FIREPLACE.

2.2.4 Outdoor Wall Insulation

1. When installing a fireplace on an exterior wall, or when the chase bumps off the house towards the exterior, the chase will need to be insulated. The chase will need to be considered another room in the home, insulate the floor, walls, and ceiling to the R-Value as the rest of the home. Refer to local building codes for proper fire stopping. Insulation and vapor barrier must be covered with the building such as drywall. Refer to your local building codes.
2. When installing a fireplace and chimney with a 2 story chase, it is ideal to insulate the chase to the upper level ceiling. DO NOT INSULATE THE WALL BETWEEN THE CHASE AND THE INTERIOR OF THE ROOM.

CAUTION

Failure to insulate the chase will affect the amount of heat the fireplace produces and result could in cold transferring through the fireplace into the home.

2.2.5 Insulating Chase Framing

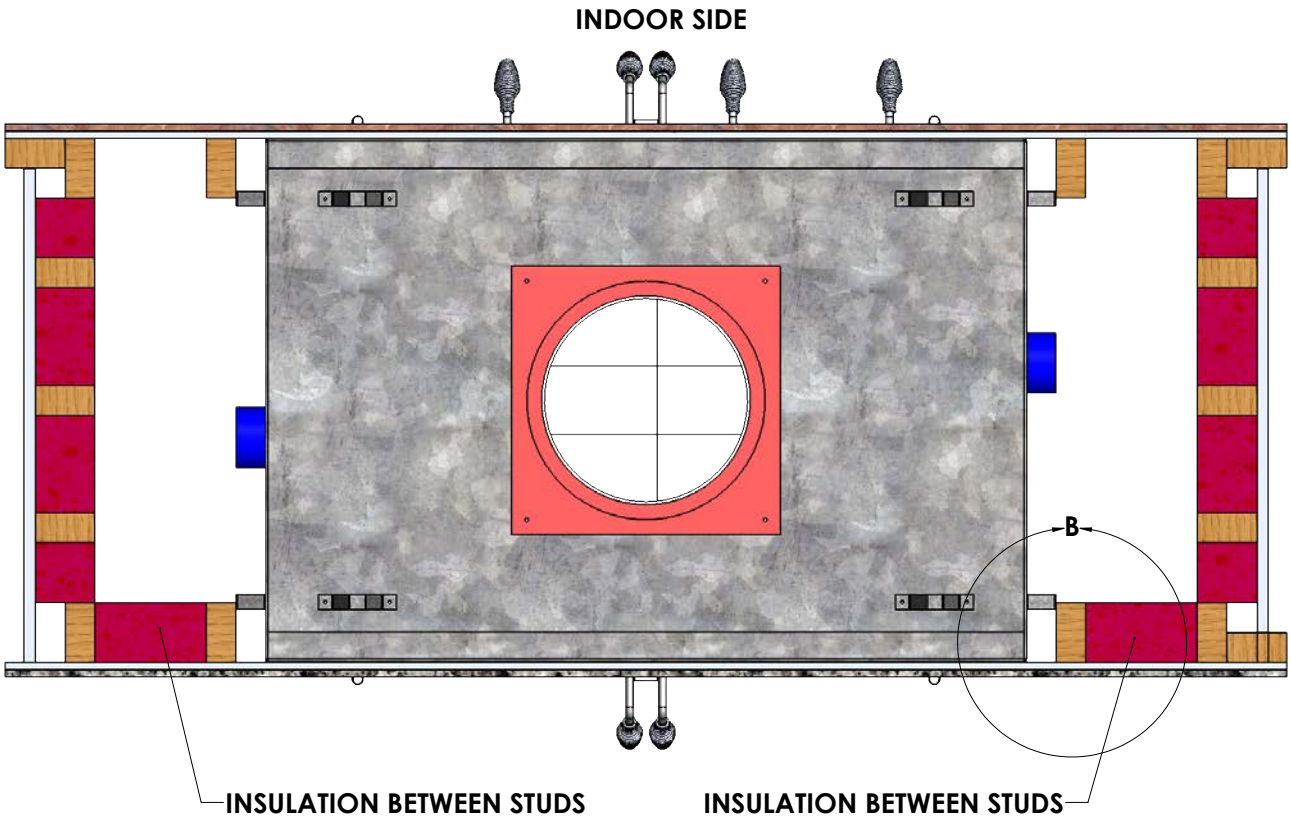

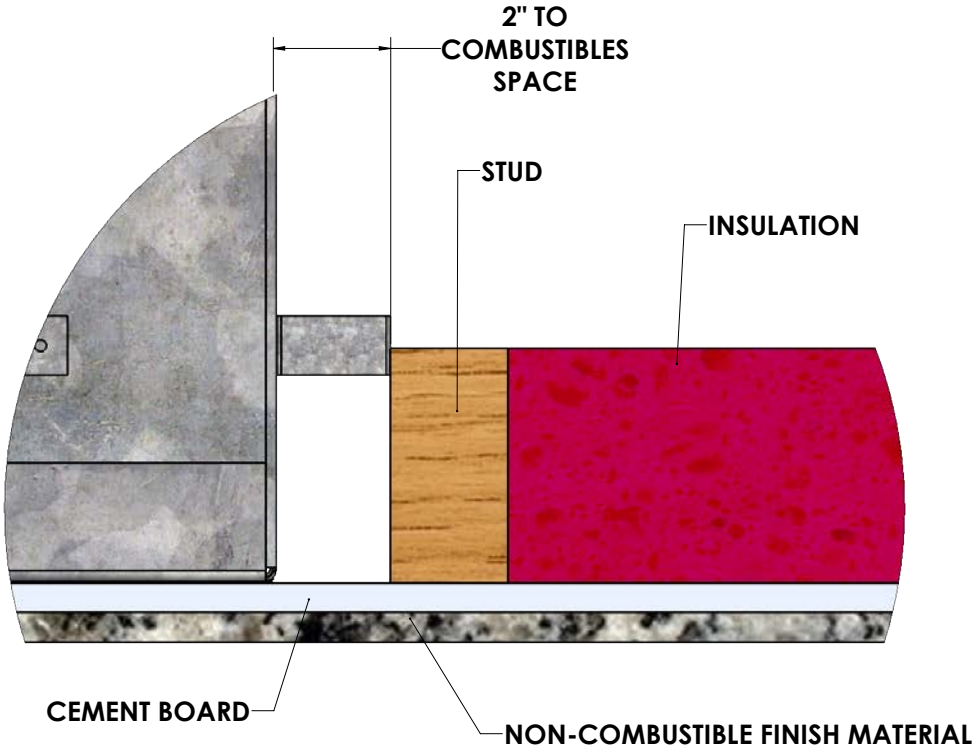

DETAIL B
SCALE 1 : 1.5

2.3 Flue Installation

2.3.1 Important Flue Notes

1. The Acucraft Fireplace Systems Single Sided Wood Fireplace is designed to be used with an insulated Class A (UL-103HT or higher for US and ULC-S604 for Canada) Flue pipe only.
2. If you purchase your flue through Acucraft, the anchor plate is fully assembled and sealed prior to shipment.
3. The chimney is intended for use with residential, commercial and industrial heating appliances, and for fireplaces where permitted by the local building codes.
4. Start connecting your flue sections from the anchor plate referring to the manufacturer's installation instructions
5. The chimney may be enclosed in a combustible chase. If it is desirable to enclose the chimney, then maintain at least 2" clearance to combustibles. See Example 1 in section 2.3.1 for ICC clearance calculation example. Check local codes for your area for chase clearances..
6. The chimney must extend at least 3 ft. above its point of contact with the roof and at least 2 ft. higher than any wall, roof or adjacent building within 10 ft. The chimney must project a minimum of 8" above a locally fabricated metal chase flashing. **Note:** In California this chase flashing is required to be ventilated.
7. Factory built chimneys which extend through any story above that on which the connected appliance is located are to be provided with enclosures having a fire rating equal to or greater than that of the floor or roof assembly through which they pass. Refer to local requirements and codes to your specific area.
8. A minimum chimney height of 15' measured from the base of the fireplace to the rain cap. Code height may be lower than optimal performance based on environmental variables..
9. The maximum height of unbraced chimney above the roof is 5 ft; anything above requires a roof brace
10. A straight chimney system is preferred, if offsets are required to avoid framing and maintain required clearance, it is recommended to use a 24" length of chimney off the fireplace, then offset.
11. A maximum of 30 degree elbows can be used in the USA, 45 degree elbows are allowed in Canada. Verify with local building official. A maximum of 4 elbows and up to 30° elbows can be used.
12. A support must be installed above each chimney offset. Wall supports are required every 8 ft of vertical rise of chimney.
13. ADD WALL SUPPORTS WHILE INSTALLING THE CHIMNEY SYSTEM, AND SECURE TO CHIMNEY AND FRAMING AS YOU BUILD THE CHIMNEY. FAILURE TO SECURE THE CHIMNEY WHILE ADDING SECTIONS WILL TRANSFER CHIMNEY WEIGHT TO THE TOP OF THE FIREPLACE AND BEND THE INSULATED PANEL ASSEMBLY AND CAN BREAK THE ANCHOR PLATE SEAL, CAUSING SMOKE LEAKAGE. UNDER NO CIRCUMSTANCES CAN THE CHIMNEY SYSTEM BE REDUCED IN SIZE.
14. The chimney system cannot be connected to a masonry chimney or stainless steel liner system in a masonry chimney
15. Do not fill the space around the chimney with insulation or any other material. This space must remain empty.
16. Up sizing or downsizing of the flue is not approved for this fireplace.
17. Single wall or double wall black connector pipe is NOT allowed.
18. **Air cooled flue is not acceptable.**

⚠ WARNING

2" CLEARANCE IS MANDATORY, THERE IS NO WAY TO REDUCE CLEARANCES WITH SHIELDS OR INSULATION.

2.3.2 Chase Top Example

CHASE TOP EXAMPLE

A chase top is the pan that seals the top of the chase. Typically a local sheet metal shop can provide a chase top. The chimney passes through the panel with a 3”-4” collar cut where the chimney is located, the collar should be just larger than the chimney, the storm collar will cover the space between the collar and the chimney, high temp/RTV silicone caulk is used around the chimney at the top of the storm collar.
The chase top wraps around the side of the chase, and should flare out at an angle and hem back on itself to act as a drip edge.

Acucraft has found wrapping the top of the chase with a wood band or furring strip equal to or slightly more than the thickness of the stone works best. The stone is then installed up to the wood, the chase top extends down just past the line. This will also make sure there is no room for birds or bats or other animals to enter the chase.

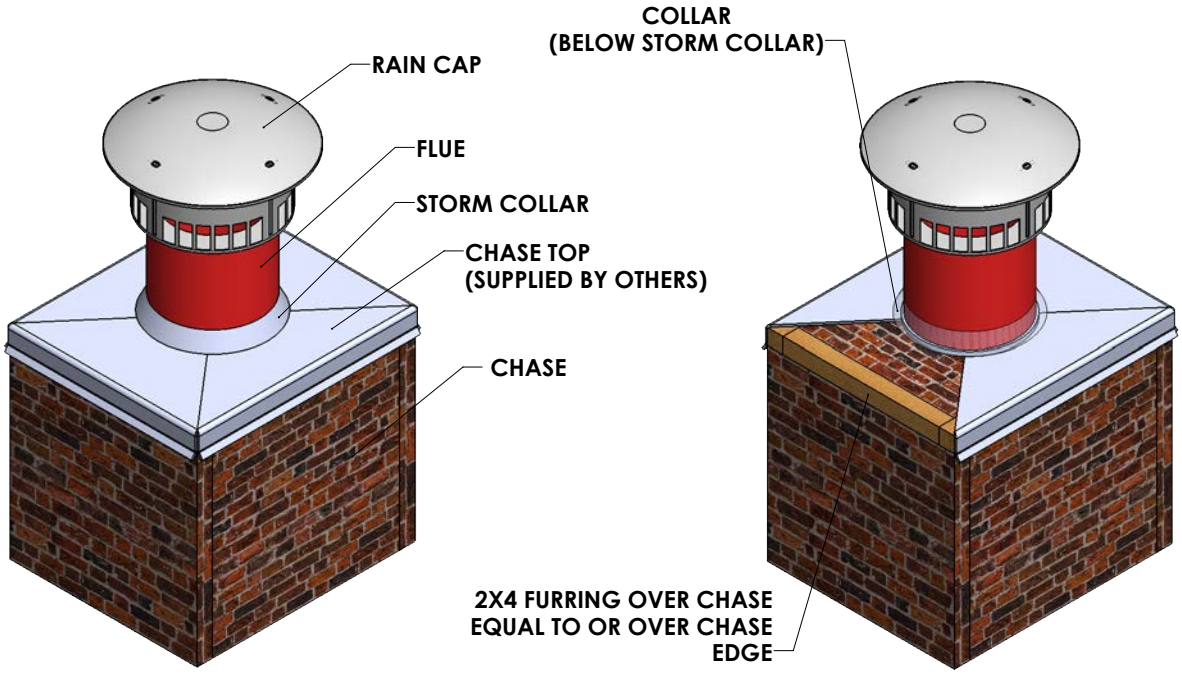

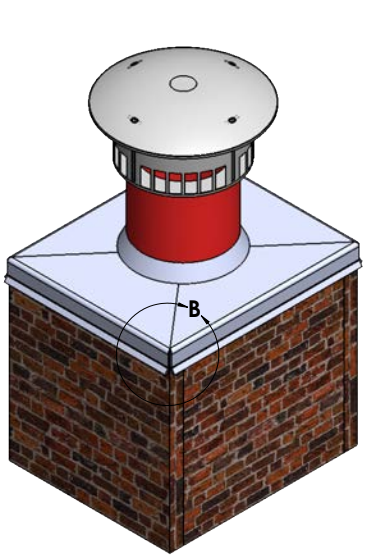

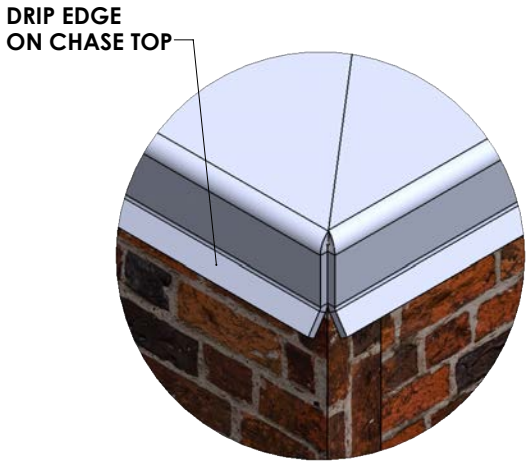

DETAIL B
SCALE 1 : 1

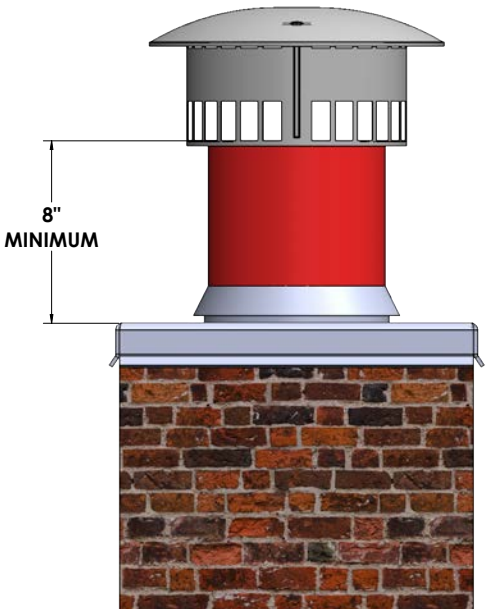

2.3.3 Exposed Chase

Refer to all local and state codes required for flue installation. These are representations only.

Refer to previous pages of Section 2.3 for chase top example.

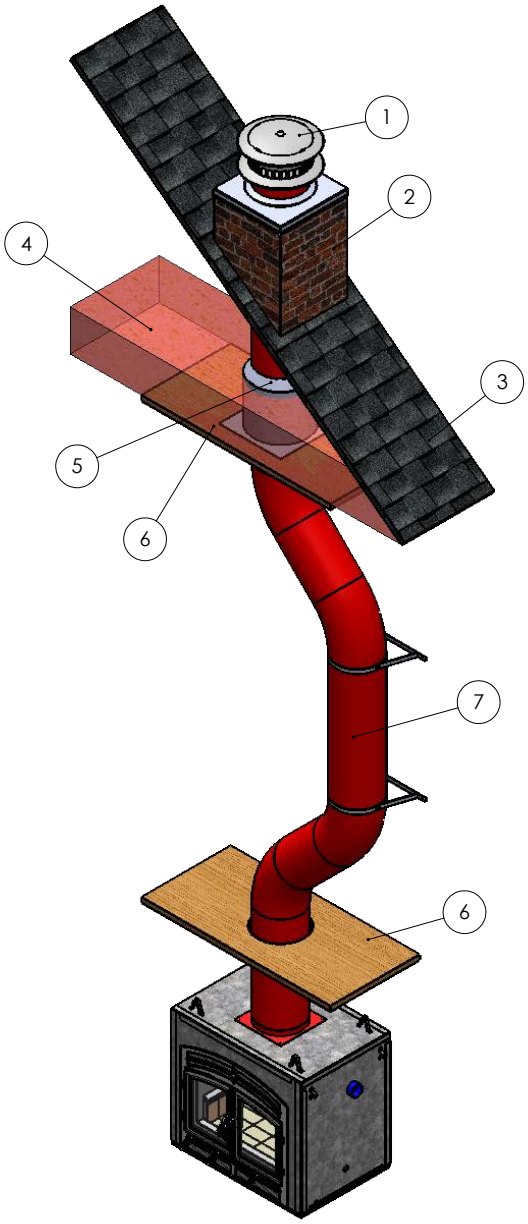

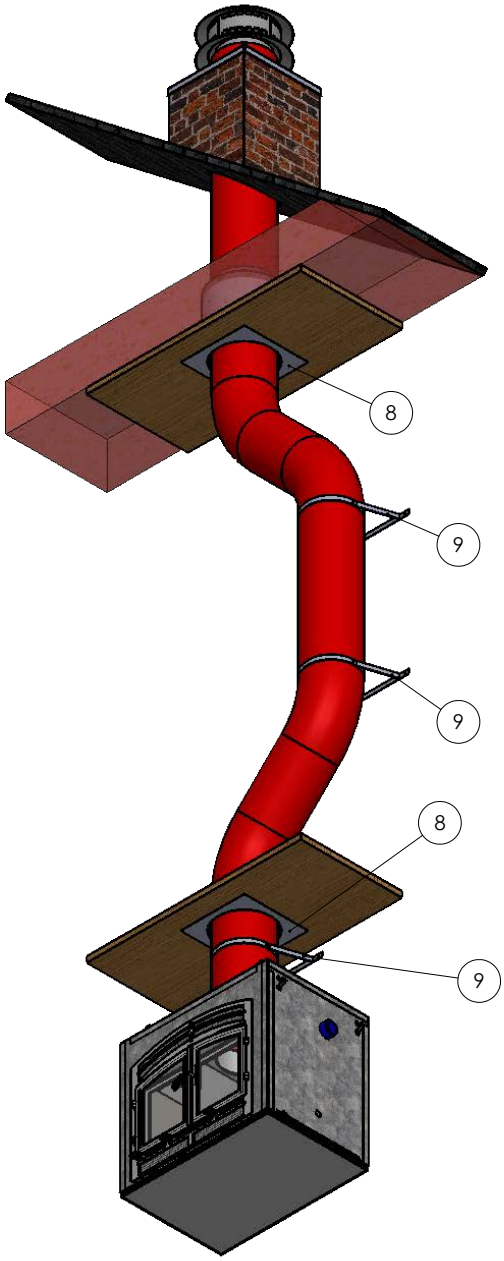

1	Chase Top
2	Exposed Chase
3	Roof
4	Insulation
5	Attic Insulation Shield

6	Floor
7	Flue Pipe
8	Firestop
9	Wall Band

2.3.4 Exposed Flue Pipe

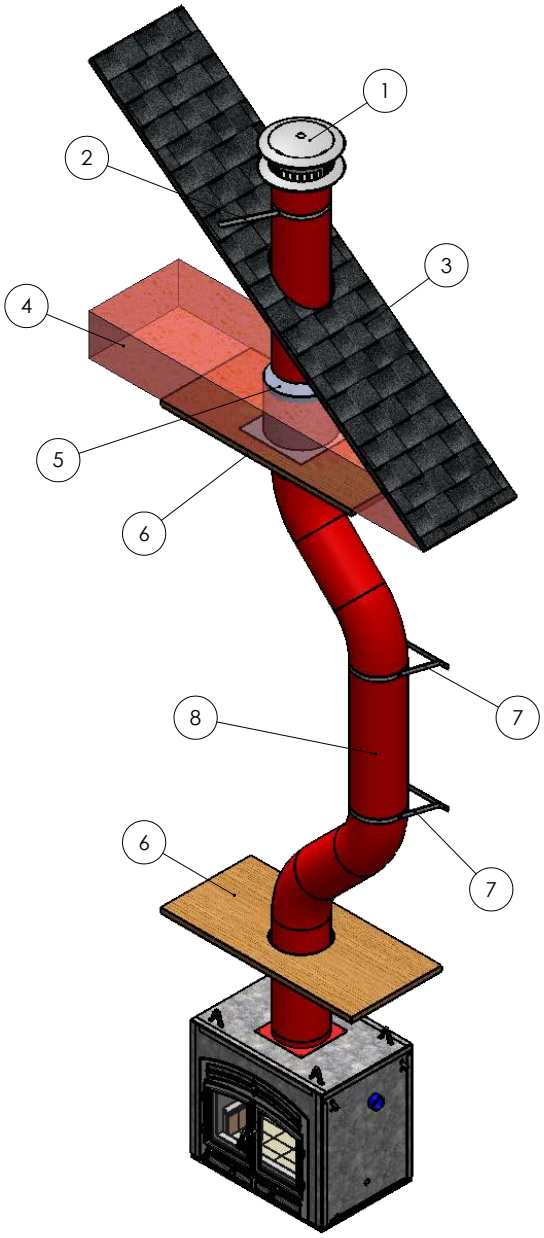

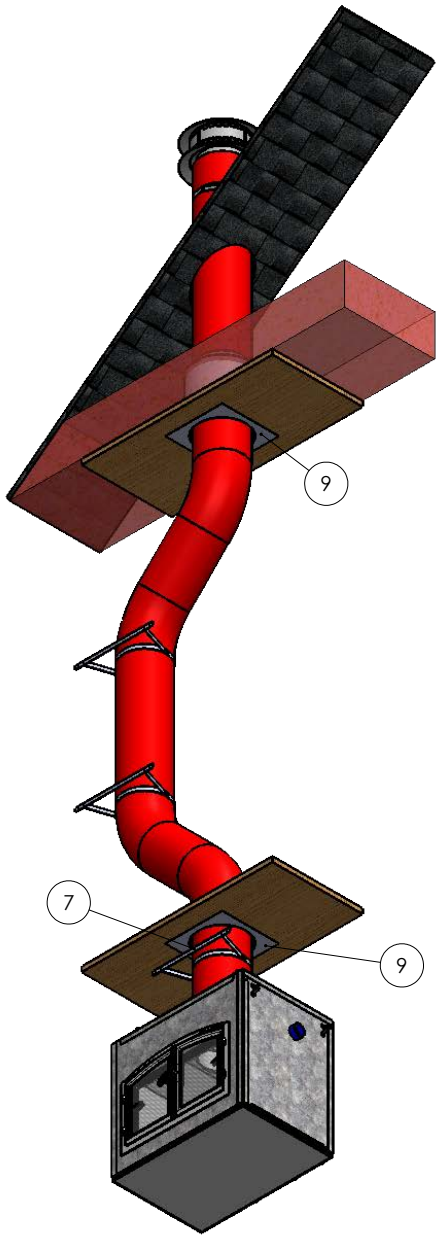

1	Rain Cap
2	Roof Brace
3	Roof (Representation)
4	Insulation (Representation)
5	Attic Insulation Shield
6	Floor (Representation

7	Wall Band
8	Flue Pipe
9	Firestop

2.3.5 Vaulted Ceiling Flue Pipe

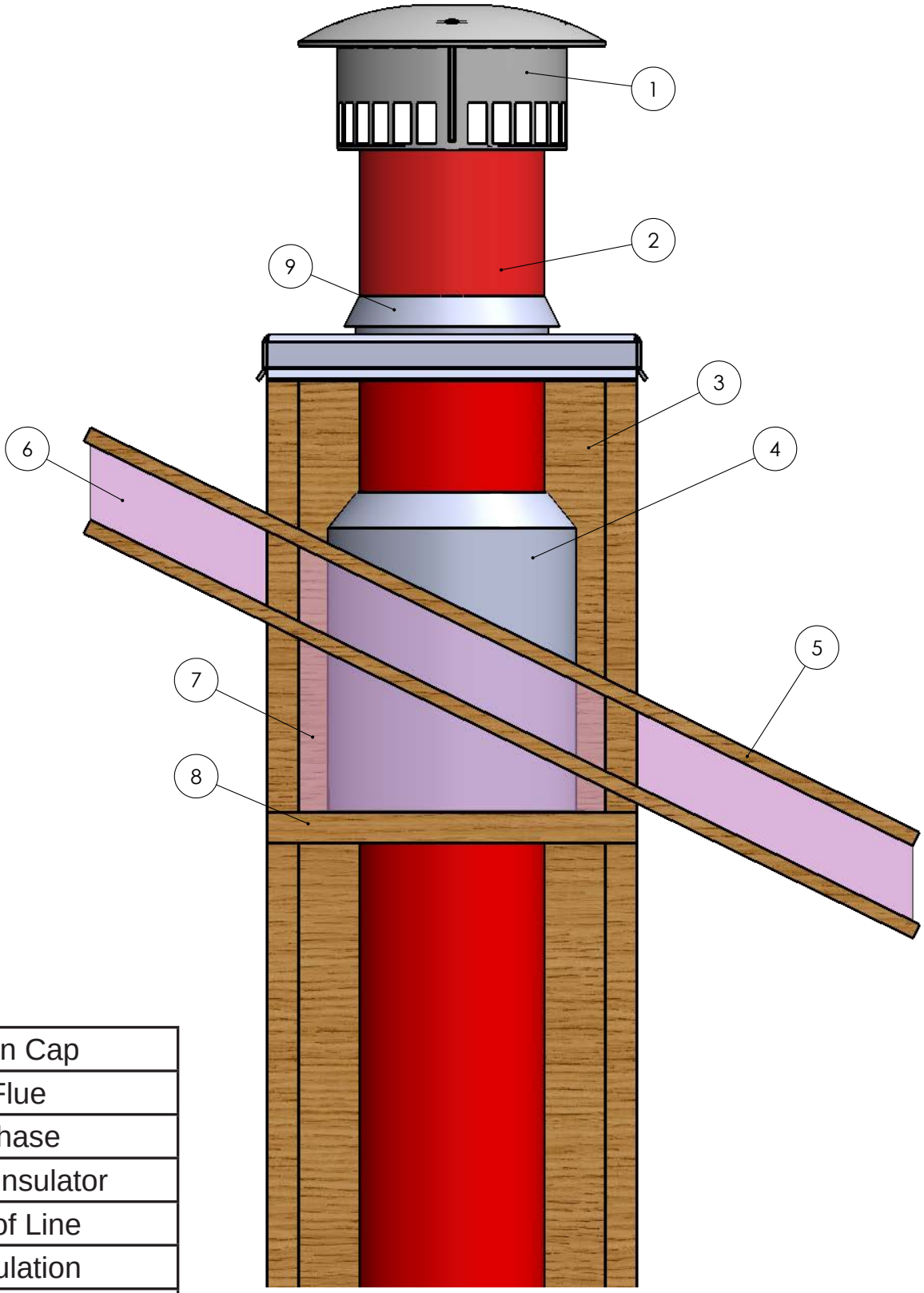

1	Rain Cap
2	Flue
3	Chase
4	Attic Insulator
5	Roof Line
6	Insulation
7	Insulation
8	Flat Floor
9	Storm Collar

ICC FLUE

SECTION 2.3.4 PERTAINS TO ICC FLUE COMPONENTS ONLY

2.3.6 ICC Flue Clearances

HR Model	Flue Size (I.D.)	O.D.	Minimum Total Clearance (Square)
HR36 I/O	14”	16”	20” X 20”
HR 44 I/O	16”	18”	22” X 22”
HR 48 I/O	18”	20”	24” X 24”

2.3.7 ICC Flue Components

Straight Insulated Chimney Pipe

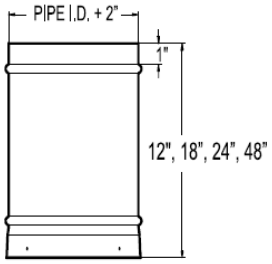

Pipe Diameter	O.D.	Length
Ø14”	16”	12”, 18” 24” 48”
Ø16”	18”	
Ø18”	20”	

Insulated Adjustable Chimney Pipe

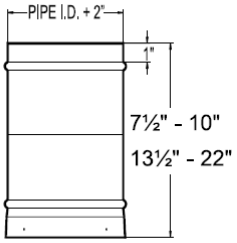

Pipe Diameter	O.D.	Length
Ø14”	16”	7.5” - 10” 13.5” - 22”
Ø16”	18”	
Ø18”	20”	

Wall Supports and Wall Bands

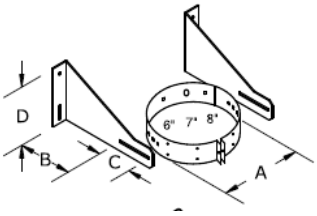

Storm Collar

ICC FLUE

SECTION 2.3.4 PERTAINS TO ICC FLUE COMPONENTS ONLY

Elbows

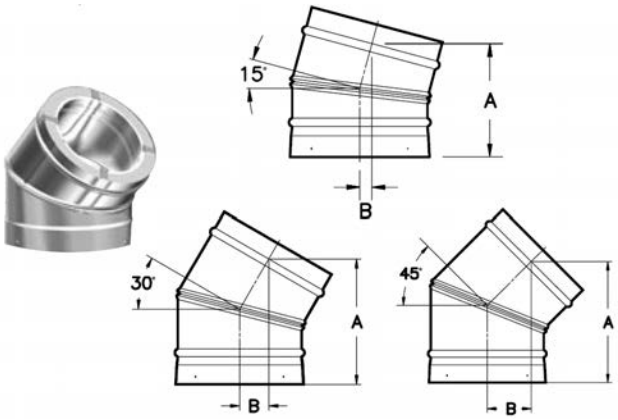

	Pipe I.D.					
	Ø14”		Ø16”		Ø18”	
Angle	A	B	A	B	A	B
15° Elbow	7 7/8”	7/8”	8 3/8”	1”	8 7/8”	1”
30° Elbow	9 1/2”	2 1/8”	10”	2 1/4”	10 1/2”	2 1/12”
45° Elbow (Canada Only)	10 3/4”	3 3/4”	11 1/2”	4 1/4”	12 1/4”	4 5/8”

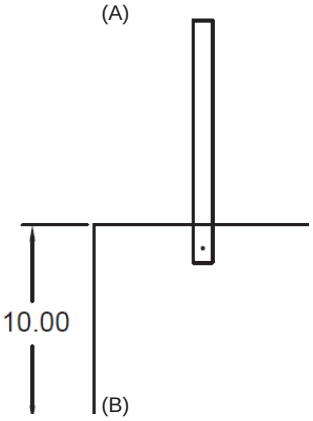

Anchor Plate Dimensions		
	A	B
Ø14”	20”	24”
Ø16”	22”	26”
Ø18”	24”	28”

Roof Brace

Offset Support

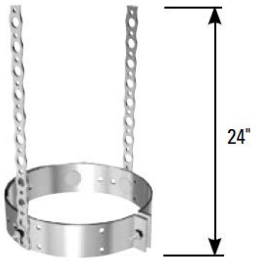

ICC FLUE

SECTION 2.3.4 PERTAINS TO ICC FLUE COMPONENTS ONLY

Rain Cap

(RRC, **RDRC**)

(RRC)

(RRCFS)

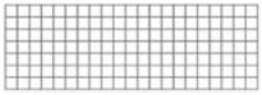

Must be used together

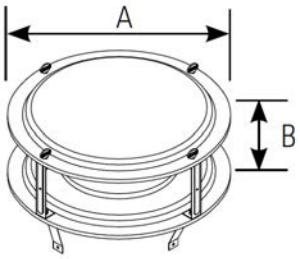

Pipe I.D.	A	B
Ø14”	23 3/4”	7”
Ø16”	27 1/4”	8”
Ø18”	30 5/8”	9”

Roof Flashing

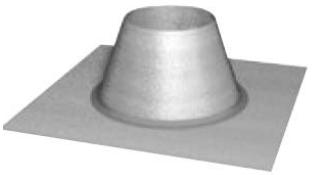

RF

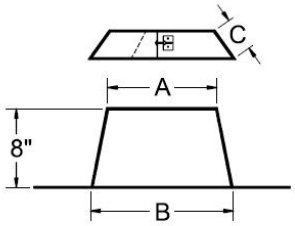

RFA, RFB

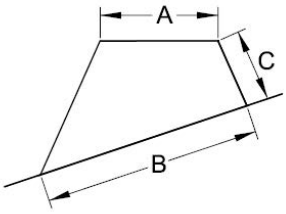

Flue I.D.	Roof Pitch	Code	Base W x L	A	B	C
Ø14”	Flat - 2/12	14RF	30” X 30”	16 1/2”	20 3/4”	8”
	1/12 - 7/12	14RFA	36” X 36”	16 1/2”	25 3/16”	11”
	8/12 - 12/12	14RFB	34” X 42”	16 1/2”	23 1/16”	11”
Ø16”	Flat - 2/12	16RF	32” X 32”	18 1/2”	22 3/4”	8”
	1/12 - 7/12	16RFA	38” X 38”	18 1/2”	27 1/2”	11”
	8/12 - 12/12	16RFB	36” X 44”	18 1/2”	25 3/4”	11”
Ø18”	Flat - 2/12	18RF	34” X 34”	20 1/2	24 3/4”	8”
	1/12 - 7/12	18RFA	41” X 41”	18 1/2”	29 3/4”	11”
	8/12 - 12/12	18RFB	38” X 48”	18 1/2”	27 3/4”	11”

2.3.8 ICC Offset Chart

ICC FLUE

SECTION 2.3.4 PERTAINS TO ICC FLUE COMPONENTS ONLY

Offset Table Ø14”						
	2 x 15° Elbows		2 x 30° Elbows		2 x 45° Elbows (Canada Only)	
Length	Rise	Offset	Rise	Offset	Rise	Offset
0”	12 7/8”	1 3/4”	16”	4 1/4”	18 7/8”	7 3/4”
12”	23 1/4”	4 1/2”	25 1/4”	9 5/8”	26 1/2”	15 3/8”
24”	34 7/8”	7 5/8”	35 5/8”	15 5/8”	35”	23 7/8”
48”	58”	13 3/4”	56 1/2”	27 5/8”	51 7/8”	40 7/8”
48”+12”	68 3/8”	16 5/8”	65 3/4”	33”	59 1/2”	48 1/2”
48”+24”	80”	19 5/8”	76 1/8”	39”	68”	57”
48”+24”+12”	90 3/8”	22 1/2”	85 1/2”	44 3/8”	75 5/8”	64 1/2”
48”+48”	103 1/8”	25 7/8”	96 5/8”	51”	85”	73 7/8”

Offset Table Ø16”						
	2 x 15° Elbows		2 x 30° Elbows		2 x 45° Elbows (Canada Only)	
Length	Rise	Offset	Rise	Offset	Rise	Offset
0”	12 7/8”	1 3/4”	16 7/8”	4 1/2”	20 1/8”	8 3/8”
12”	23 1/4”	4 1/2”	26 1/4”	9 7/8”	27 3/4”	16”
24”	34 4/8”	7 5/8”	36 5/8”	15 7/8”	36 1/4”	24 3/8”
48”	58”	13 3/4”	57 3/8”	27 7/8”	53 1/4”	41 3/8”
48”+12”	68 3/8”	16 5/8”	66 5/8”	33 1/4”	60 3/4”	49”
48”+24”	80”	19 5/8”	77 1/8”	39 1/4”	69 1/4”	57 1/2”
48”+24”+12”	90 3/8”	22 1/2”	86 3/8”	44 5/8”	76 7/8”	65 1/8”
48”+48”	103 1/8”	25 7/8”	97 7/8”	51 1/4”	86 1/4”	74 1/2”

Offset Table Ø18”						
	2 x 15° Elbows		2 x 30° Elbows		2 x 45° Elbows (Canada Only)	
Length	Rise	Offset	Rise	Offset	Rise	Offset
0”	13 7/8”	1 7/8”	17 7/8”	4 3/4”	21 3/8”	8 7/8”
12”	24 1/4”	4 5/8”	27 1/8”	10 1/8”	29”	16 1/2”
24”	35 7/8”	7 3/4”	37 1/2”	16 1/8”	37 1/2”	25”
48”	59”	13 7/8”	58 1/4”	28 1/8”	54 1/8”	41 7/8”
48”+12”	69 3/8”	16 3/4”	67 5/8”	33 1/2”	62 1/8”	49 1/2”
48”+24”	81”	19 3/4”	78”	39 1/2”	70 5/8”	58”
48”+24”+12”	91 3/8”	22 5/8”	87 3/8”	44 7/8”	78 1/8”	65 5/8”
48”+48”	104 1/8”	26”	98 3/4”	51 1/2”	87 1/2”	75”

METAL FAB FLUE

SECTION 2.3.4 PERTAINS TO METAL FAB FLUE COMPONENTS ONLY

2.3.9 Metal Fab Flue Clearances

HR Model	Flue Size (I.D.)	O.D.	Minimum Total Clearance (Square)
HR36 SS	14”	17”	21” x 21”
HR 44 SS	16”	19”	23” x 23”
HR 48 SS	18”	21”	25” x 25”

2.3.10 Metal Fab Flue Components

Straight Chimney Pipe

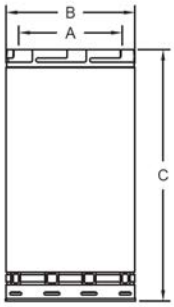

Size	Ø14”	Ø16”	Ø18”
A	14”	16”	18”
B	17”	19”	21”
C	12”, 18”, 24”, 36”		

15° Elbow

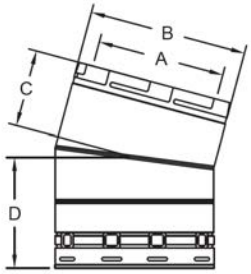

Size	Ø14”	Ø16”	18”
A	14”	16”	18”
B	17”	19”	21”
C	5.13”	5.25”	5.4”
D	6.13”	6.25”	6.4”

30° Elbow

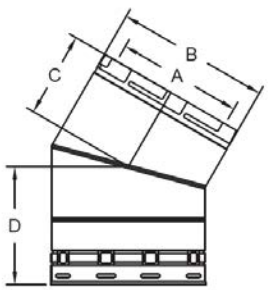

Size	Ø14”	Ø16”	Ø18”
A	14”	16”	18”
B	17”	19:	21”
C	6.25”	6.5”	6.81”
D	7.25”	7.5”	7.81”

METAL FAB FLUE

SECTION 2.3.4 PERTAINS TO METAL FAB FLUE COMPONENTS ONLY

Wall Band

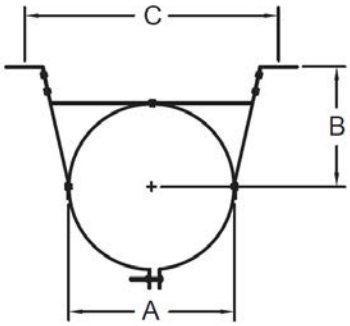

Size	Ø14”	Ø16”	Ø18”
A	17”	19”	21”
B	10.5”	11.5”	12.5”
C	18”	20”	22”

Wall Band Adjustment Kit

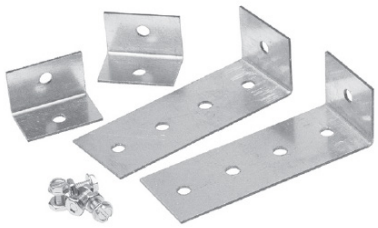

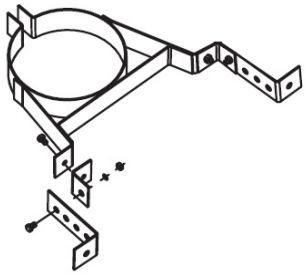

Firestop Assembly

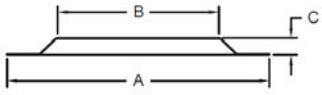

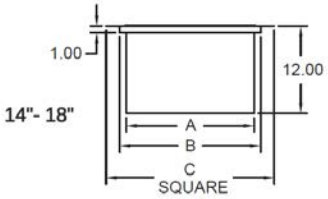

Size	Ø14”	Ø16”	Ø18”
A	19”	21”	23”
B	21”	23”	25”
C	25”	27”	29”

METAL FAB FLUE

SECTION 2.3.4 PERTAINS TO METAL FAB FLUE COMPONENTS ONLY

Chimney Cap/Spark Arrester

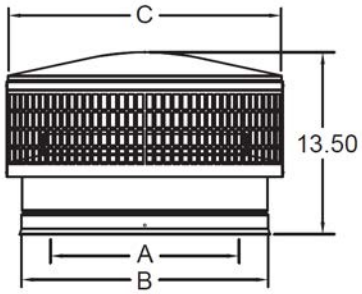

Size	Ø14”	Ø16”	Ø18”
A	14”	16”	18”
B	17”	19”	21”
C	19.13”	21”	24”

Flat Roof Flashing

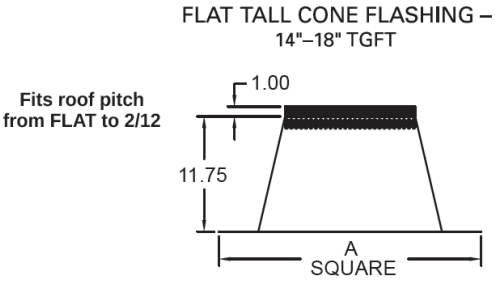

Size	Ø14”	Ø16”	Ø18”
A	33”	35”	37”

Anchor Plate

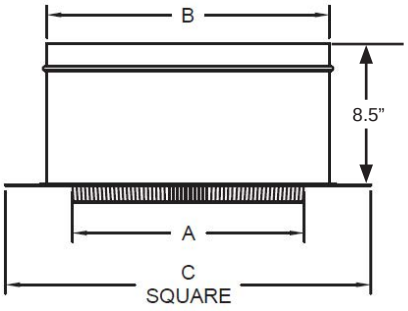

Size	Ø14”	Ø16”	Ø18”
A	14”	16”	18”
B	17”	19”	21”
C	22”	24”	26”
Height	8.5”		

2.3.11 Metal-Fab Offset Charts and Elbow Installation

METAL FAB FLUE

SECTION 2.3.4 PERTAINS TO METAL FAB FLUE COMPONENTS ONLY

These charts are provided for reference only. Check local codes for offsets in your area.

Offset Table Ø14					
Length	No. Pieces	15° Angle		30° Angle	
		A	B	A	B
0”	0	24 1/4”	3 1/8”	25”	6 5/8”
12”	1	35 3/8”	6 1/8”	35”	12 3/8”
18”	1	41 1/8”	7 5/8”	40 1/8”	15 3/8”
30”	2	52 1/4”	10 5/8”	50 1/8”	21 1/8”
36”	1	58 1/2”	12 3/8”	55 3/4”	24 3/8”
42”	3	63 3/8”	13 5/8”	60 1/8”	26 7/8”
48”	1	70 1/8”	15 1/2”	66 1/8”	30 3/8”
54”	2	75 3/8”	16 7/8”	70 7/8”	33 1/8”
60”	2	81 1/4”	18 3/8”	76 1/8”	36 1/8”
72”	2	92 3/4”	21 1/2”	86 1/2”	42 1/8”
84”	2	104 3/8”	24 5/8”	96 7/8”	48 1/8”
90”	3	109 3/4”	26”	101 5/8”	50 7/8”
96”	2	116”	27 3/4”	107 1/4”	54 1/8”

Offset Table Ø16					
Length	No. Pieces	15° Angle		30° Angle	
		A	B	A	B
0”	0	24 1/4”	3 1/8”	26”	6 7/8”
12”	1	35 3/8”	6 1/8”	36”	12 5/8”
18”	1	41 1/8”	7 5/8”	41 1/8”	15 5/8”
30”	2	52 1/4”	10 5/8”	51 1/8”	21 3/8”
36”	1	58 1/2”	12 3/8”	56 3/4”	24 5/8”
42”	3	63 3/8”	13 5/8”	61 1/8”	27 1/8”
48”	1	70 1/8”	15 1/2”	67 1/8”	30 5/8”
54”	2	75 3/8”	16 7/8”	71 7/8”	33 3/8”
60”	2	81 1/4”	18 3/8”	77 1/8”	36 3/8”
72”	2	92 3/4”	21 1/2”	87 1/2”	42 3/8”
84”	2	104 3/8”	24 5/8”	97 7/8”	48 3/8”
90”	3	109 3/4”	26”	102 5/8”	51 1/8”
96”	2	116”	27 3/4”	108 1/4”	54 3/8

METAL FAB FLUE

SECTION 2.3.4 PERTAINS TO METAL FAB FLUE COMPONENTS ONLY

Offset Table Ø18					
Length	No. Pieces	15° Angle		30° Angle	
		A	B	A	B
0”	0	24 1/4”	3 1/8”	27”	7 1/8”
12”	1	35 3/8”	6 1/8”	37”	12 7/8”
18”	1	41 1/8”	7 5/8”	42 1/8”	15 7/8”
30”	2	52 1/4”	10 5/8”	52 1/8”	21 5/8”
36”	1	58 1/2”	12 3/8”	57 3/4”	24 7/8”
42”	3	63 3/8”	13 5/8”	62 1/8”	27 3/8”
48”	1	70 1/8”	15 1/2”	68 1/8”	30 7/8”
54”	2	75 3/8”	16 7/8”	72 7/8”	33 5/8”
60”	2	81 1/4”	18 3/8”	78 1/8”	36 5/8”
72”	2	92 3/4”	21 1/2”	88 1/2”	42 5/8”
84”	2	104 3/8”	24 5/8”	98 7/8”	48 5/8”
90”	3	109 3/4”	26”	103 5/8”	51 3/8”
96”	2	116”	27 3/4”	109 1/4”	54 5/8”

Elbow Installation

1. Metal-Fab provides a 15° and 30° elbow to allow chimneys to avoid framing member or roof peaks. A total of 4 elbows (2 pair) for each chimney installation is allowed.
2. Attach the elbow to the chimney pipe or other support part and twist to lock. Using the offset chart above (table provided, for reference only), add chimney sections between elbows. A support band is required at the upper elbow of the pair to support the load. Attach upper elbow to bring chimney back to vertical.

EXPOSED CHIMNEY - INTERIOR

Having an exposed chimney through the interior side can be done, it will require lots of planning and possibly custom trim parts from a sheet metal shop. Acucraft will offer limited support, due to the complexity of installing an exposed chimney.

The class A chimney is designed to be inside wall/chase and is utilitarian and not built for cosmetics. You will require fire stops to maintain clearance and radiation shields to hold back insulation in attic spaces. You will need to caulk these parts in order maintain vapor barriers and stop air movement.

The chimney is susceptible to small dents and scratches during production, shipping and install. The chimney is designed to be exposed on the exterior, Small blemishes and details are not as obvious due to the location and distance it's viewed from.

The finish can also vary from a bright stainless steel, to a dull stainless steel, dents and blemishes are nearly impossible to repair. The pipe can be painted with a high temperature paint, (Stove Bright fireplace paint) but you will need to sand the entire chimney system to rough up the surface for paint. The paint may wear off in time and may require additional repaint and touch up. Other parts like the chimney supports are galvanized steel (Interior or exterior use) and may not accept paint as well, so extra care may be needed for a nicer finish, or custom parts may need to be supplied by others.

You may encounter the need to have custom trim parts made to cover the fire stops and radiation shields, they are made to minimum sizes and may need trim parts made to be installed after the chimney is installed. Two (2) piece trim rings and plates may not look as neat. If you slide a decorative trim plate on the pipe, you may scratch the pipe.

Acucraft recommends using Stove Bright High Temperature Stove Paint. Acucraft does not include this with the fireplace.

The below label is provided with and must be applied to each section of the chimney pipe. It must be applied by wrapping it around the circumference of the pipe. Chimney sections that will remain exposed do not require this label.

The fireplace and chimney must be clean and in good working order and constructed of non-combustible materials.

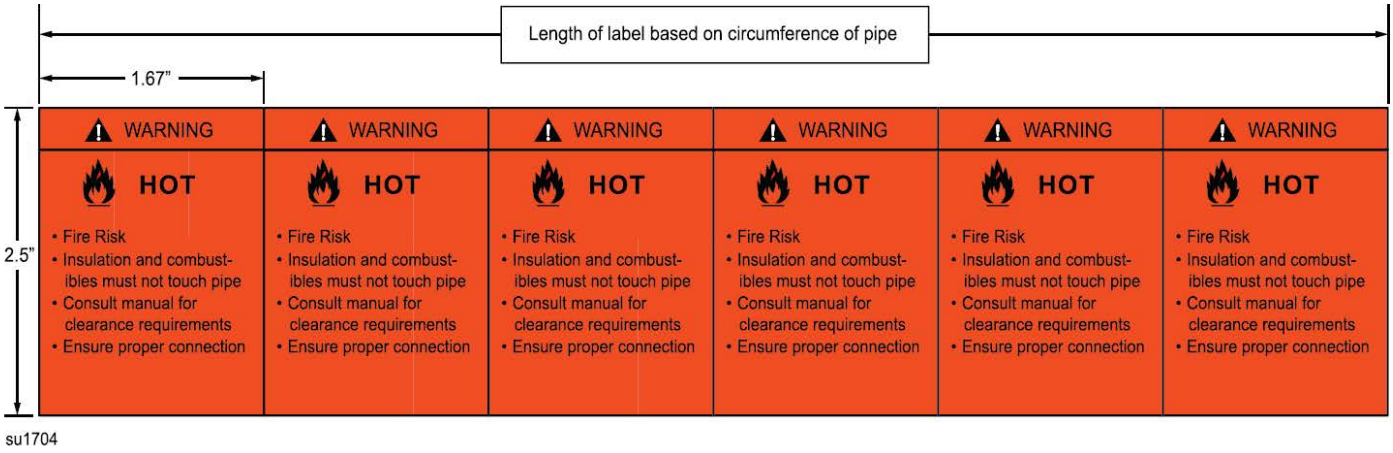

WARNING

SPRAY FOAM INSULATION CAN NEVER BE IN CONTACT WITH CHIMNEY.
IF ANY SPRAY FOAM IS ON THE CHIMNEY, REPLACE THE CHIMNEY SECTIONS AND DISCARD PRIOR TO FIRST FIRE. SPRAY FOAM IS COMBUSTIBLE AND WILL CAUSE A FIRE.

2.4 Air Intake Installation

1. Acucraft supplies the combustion air kits including flexible aluminum ducting, foil tape, screws, and outside hood.
2. The combustion air duct MUST be ducted to the exterior. The ducting run cannot run horizontal, straight out the wall without some kind of bend up or down. An air trap must be part of the ducting path. If the termination point is above the top of the duct, you must vent down a minimum of 12” before venting up. See example of a combustion air trap. If you terminate down through a lower level or floor joist, ensure the system has at least a 12” drop in height. **FAILURE to add a trap will cause the combustion air duct to act like a chimney and will expel heat and smoke. This creates a fire hazard.**
3. The vertical height of the combustion air ducts should not exceed 50% of the height of the chimney. If the combustion air ducts are venting up above the height of the fireplace, you MUST add a cold air trap to the ducting. Always vent down a minimum of 12” then, elbow up to the desired location. The cold air traps add resistance to the combustion air inlet. See the following page for recommended air trap locations. See next page for examples of cold air trap configurations.
4. The intake requires at least semi-rigid flex ducting made of aluminum or stainless steel. Single wall rigid steel ducting is also acceptable.
5. Each junction of the combustion air intake is to be wrapped with UL181 Foil Tape.
6. Combustion air ducts should be screwed together and tape at the junctions.
7. We recommend using vent hoods on the outside for a neat appearance. Do not use a vent hood designed for a dryer vent, they often have a flap that will restrict air flow. Use a combustion air hood with a screen to prevent entry of debris or small animals. Visually inspect the screen every year and clean all dirt, grass and leaves from the screen. A blocked intake will cause poor drafting.
8. Do not draw outside air from garage spaces.
9. Do not install outside air ducts such that the air may be drawn from attic spaces, basements. These precautions will reduce the possibility of appliance smoking or air flow reversal. The outside air inlets must remain clear of leaves, debris, ice or snow. It must be unrestricted while appliance is in use to prevent room air starvation which can cause smoke spillage and an inability to maintain a fire. Smoke spillage can also set off smoke alarms.
10. The combustion air inlet ducting should be properly planned out prior to construction of the fireplace, taking into consideration the location of the inlet source and ducting through the exterior wall.
11. The duct termination must be located so they cannot be blocked (i.e. snowdrifts). Check with local building codes.
12. Decide on the most convenient location for the fresh air inlet duct and hoods which may be installed above or below floor level.
13. The combustion air duct must be ducted to the exterior of facility. It is acceptable to draw intake from a properly ventilated, non-air conditioned space. Check your local codes.
14. Maximum combustion intake run is 50 feet.
15. Dual combustion air intake required. Both intakes must be used.

INSTALLER NOTE
Intake cannot exceed 50% of the flue height (see #3 on 2.4)
Flue height is calculated from the bottom of the fireplace to the rain cap.

2.4.1 Acucraft Provided Intake Kit Components

Duct Elbow

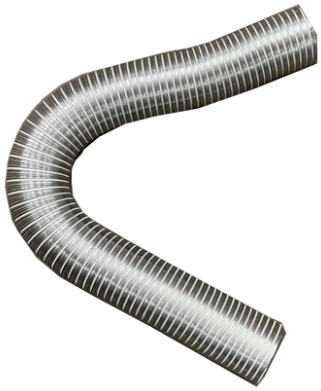

Flex Ducting

Intake Hood

Foil Tape

Strapping

Duct Insulation

Increaser

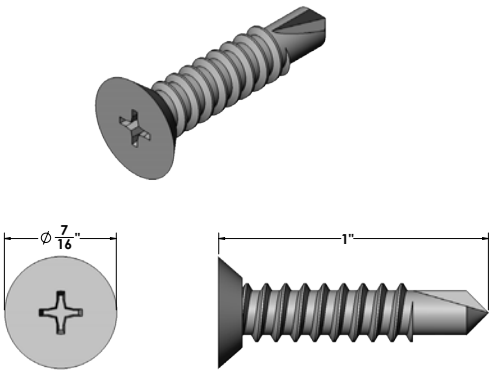

Sheet Metal Fasteners

2.4.2 Intake Configurations

Bottom Intake

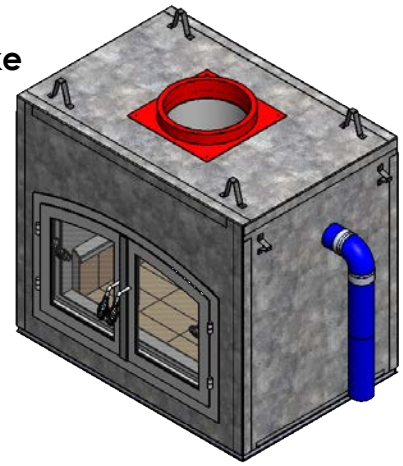

Side Intake

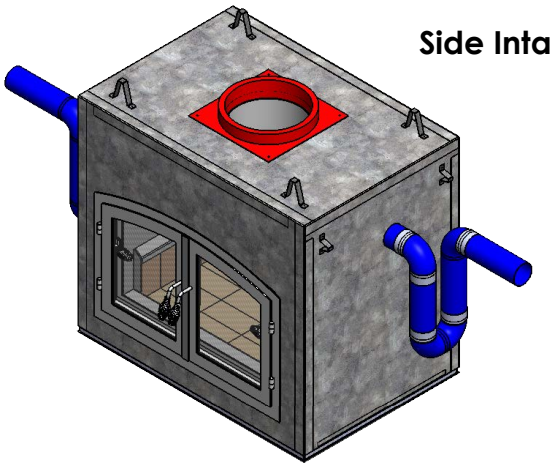

Vertical Intake

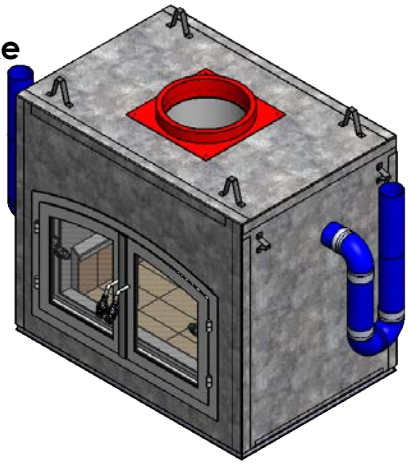

Outdoor/Rear Intake

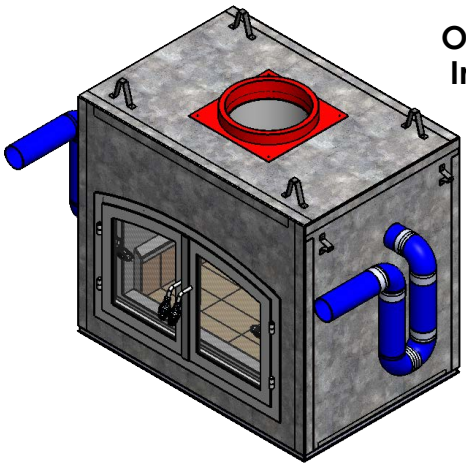

2.4.3 Intake Joint Connections

1. Prior to install stretch out the aluminum flex pipe.
2. Install the thermal sleeve prior to connecting the flex pipe.
3. Attach the 90 degree elbow to the fireplace using three screws.
4. Bend the aluminum flex to create a cold air trap.
5. Cold air trap must go down at least 12” from the intake on the fireplace.
6. Extend the ducting to the intake location.
7. **Ensure each joint is connecting with three screws and wrapped twice around with foil tape.**

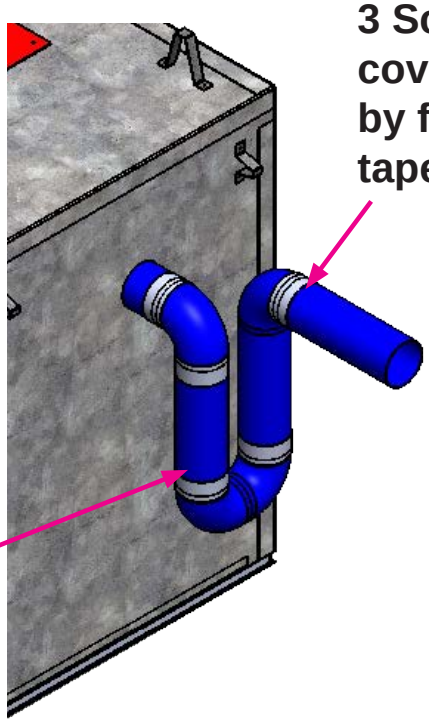

2.4.4 Combustion Air Exterior Installation

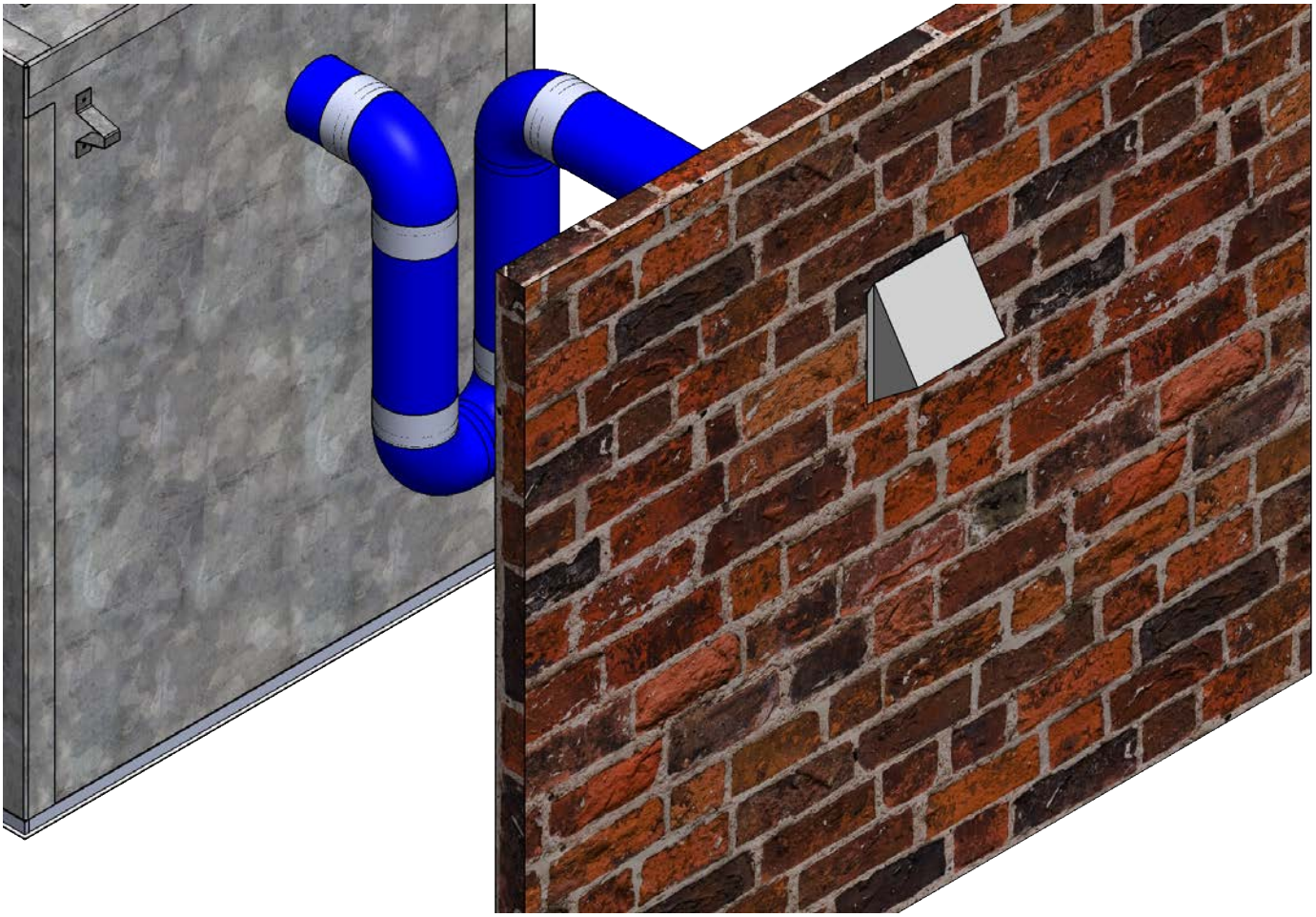

1. Connect the combustion air inlet duct to the vent hood at the intake location.
2. Attach the vent hood to the exterior of the building.
3. Seal the perimeter of the vent hood with silicone .

This page is intentionally left blank

Section 4: Operations

Section Includes

First Fire
How to Start a Fire
Controls

4.1 First Fire

CAUTION

Do not operate the blower during break-in fires. This can cool the fireplace and delay the curing of the paint.

WARNING

DO NOT START A FIRE WITH THE AIR CONTROLS IN THE CLOSED POSITION THE FIREPLACE WILL NOT GET HOT ENOUGH TO WARM THE FIREPLACE AND CHIMNEY. IT WILL ALSO BURN AT A LOW EFFICIENCY RATE AND CREATE CREOSOTE

DO NOT OVER FIRE THIS FIREPLACE. OVER FIRING OCCURS WHEN THE METAL BECOMES HOT ENOUGH TO GLOW.

1. Build a small to medium size fire using-10 split logs, position the air controls in the open position.
2. Adjust the intake flue damper into the max open position, do not adjust the intake control for at least 30-45 minutes after starting a fire. Hot coals are needed before adjusting the intake damper.
3. During startup, it is helpful to have the door cracked to allow extra air into the firebox. This is only necessary during start up. The fireplace should **NEVER** be left unattended with the doors open any amount. Letting the door open with the amount of space between the latch and fireplace is sufficient. See figure 1 below for an example.
4. DO NOT use composite logs or kiln dried lumber.

*Do not be alarmed if small hairline cracks develop in the firebrick. This is a normal occurrence and does not pose a safety hazard.

Figure 1

4.2 How to Start a Fire and Additional Product Information

TIPS FOR BURNING:

- Create a larger fire to heat up the appliance before adjusting to a slow burn.
- To create a large, quick burning fire, use small pieces of wood.
- For a lower, but extended burn, stack larger pieces of wood close together.
- For long burns, leave a 1-2” bed of ashes.

WOOD BURNING DO’S
DO
• Build a hot fire.
• Use only dry wood.
• Several pieces of medium sized wood are better than a few big pieces.
• Clean chimney regularly
• Refuel frequently using medium sized wood.
• “Fine Tune” the air settings for optimum performance.

For further information and instructions on how to start a fire, scan the QR code.

4.3 Controls

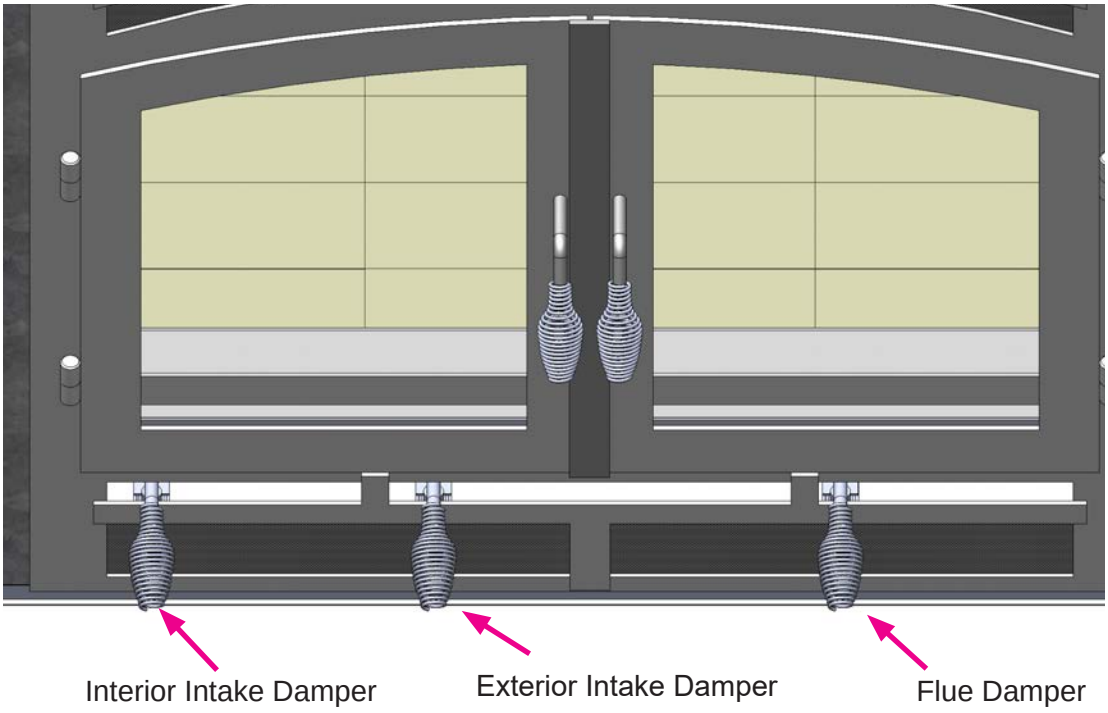

Handles all the way to the left - Air intake and flue dampers closed

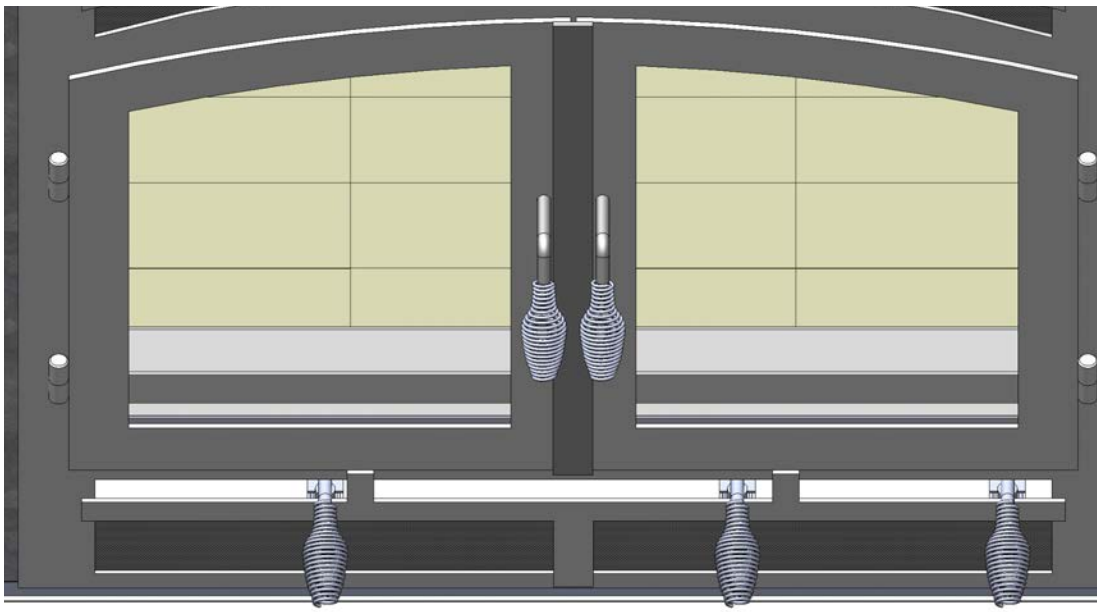

Handles all the way to the right - Air intake and flue dampers open

Section 4: Optional Items

Section Includes

Gas Logset Conversion
Firescreen Installation

5.1 Gas Logset Conversion

The Hearthroom Indoor/Outdoor fireplace can be converted to a gas logset burner from a wood burning fireplace.

1. The fireplace is equipped with the inlet for the installation of a gas line by others. A sleeve is welded on the side of the firebox for a gas line to slide through. This will save time and aid in the gas line installation, and can be done without drilling through the 7-gauge steel firebox. The interior of the fireplace has a plug, which is hidden behind the firebricks. The gas line is typically installed during the installation of the fireplace but might not be used until a later date.
2. The gas line can be used for a log lighter or for the installation of a gas log set and burner. Converting the fireplace from wood burning to gas burning. Many clients use this option to prep the fireplace for a conversion in the future.
3. If the gas is run but not being used, be sure to cap both ends with the proper fittings, DO NOT hook up the end to the existing gas lines until the gas line is being used. Leave both ends capped and sealed, make final connections at time of installing a gas starter or gas log set. Be sure to have a qualified installer make all connections and test for leaks.
4. Only use gas logsets that have been approved with the use of this fireplace or burner that comply with ANSI Z21.60-M96/CGA 2.26-M96

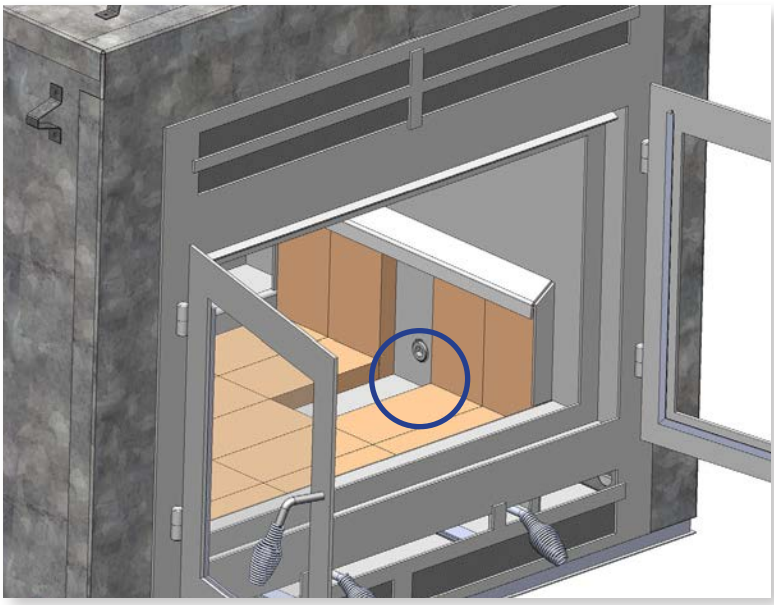

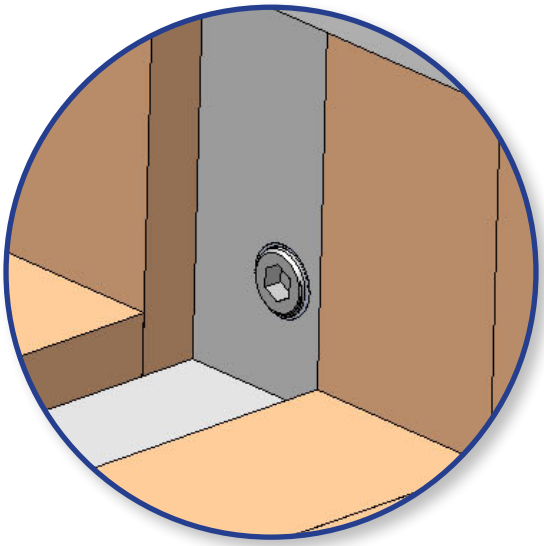

Interior view of the gas line plug. The plug is installed on the right side of the fireplace when looking at it from the indoor side. The plug can be removed using a 5/8” hex wrench.

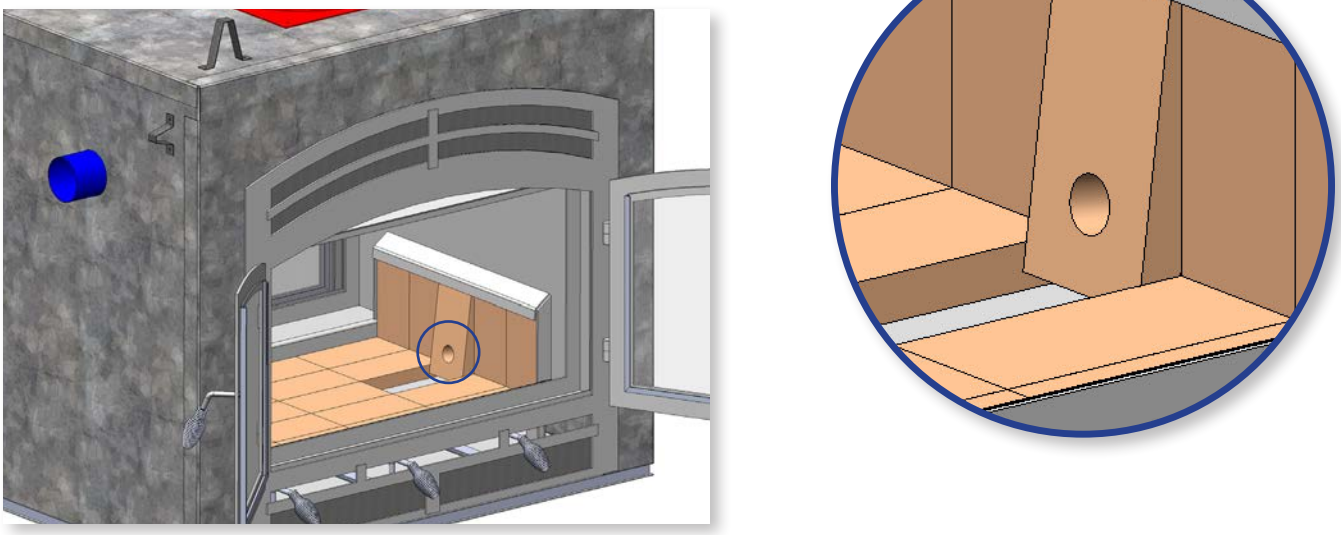

Interior view of the fireplace with the brick with the precut hole being inserted.

The gas line will be plumbed in from the right side looking at the interior side of the fireplace. Gas line is depicted in yellow on the image below.

INSTALLER NOTE

FOR GAS LOGSET CONVERSION, A 12” X 12” ACCESS PANEL MUST BE INSTALLED. GAS VALVE MUST BE INSTALLED OUTSIDE OF THE FIREPLACE AND WITHIN 36” OF THE FIREPLACE.

CAUTION

Acucraft does not recommend the use of log lighters to start a fire.

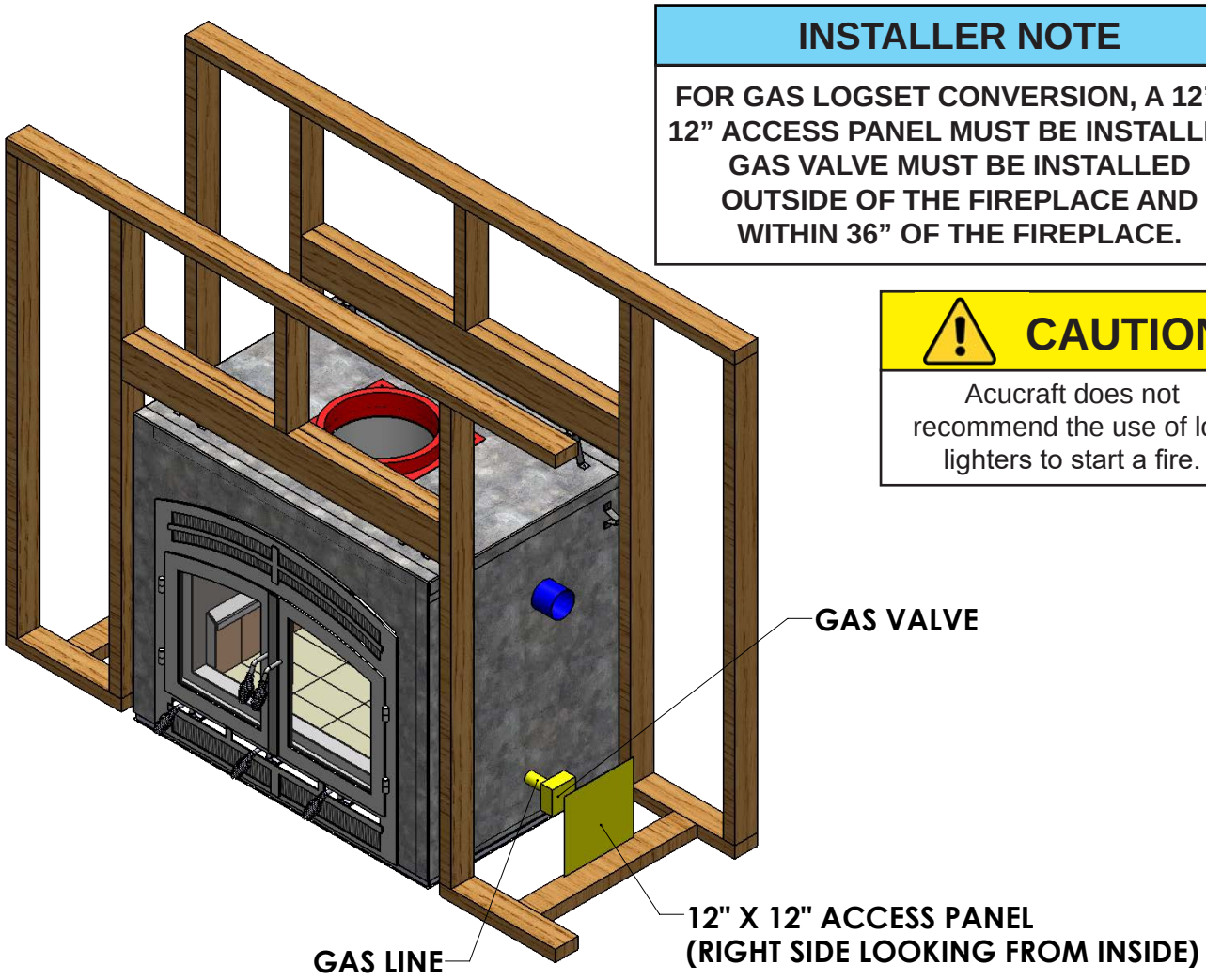

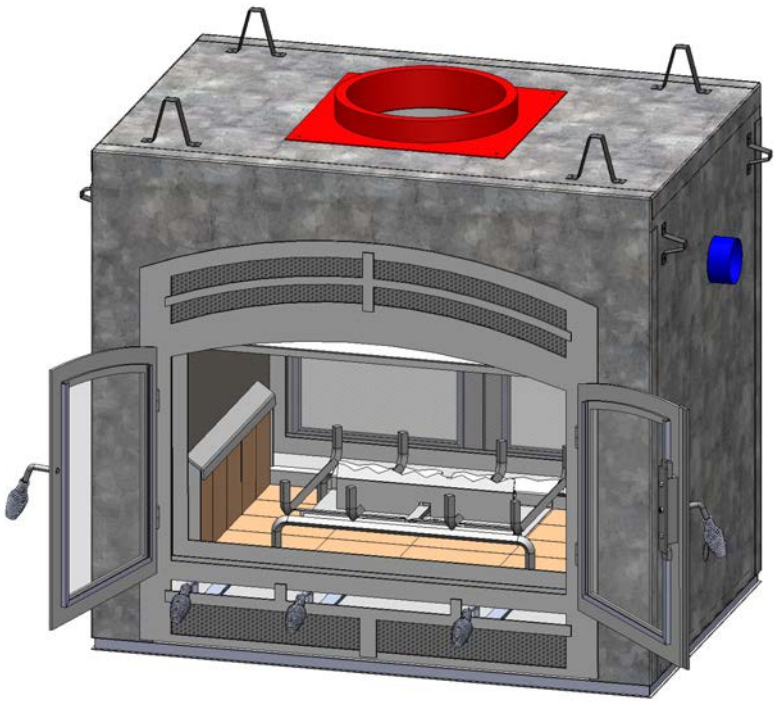

5.2 Firescreen Installation

When using the screen option, the fireplace will not provide as much heat compared to burning with the doors closed. When using the screen, the fireplace will use more air from inside the home. Adjust the flue damper to fully open and adjust the air controls to open.

The screen can mount with the doors open, or the doors can be removed. Simply lift the doors off, you may need to move them back and forth while lifting up to pull them off the hinges. Be sure to removed the doors before the fireplace is hot.

The screen has a peg at the top that tucks behind the face frame. Tilt the screen into place and set the bottom edge into the door frame. There are 2 small pegs on the bottom that secure the screen. Doors must be open when operating a fire screen.

After the firescreen has been installed remove the handles.

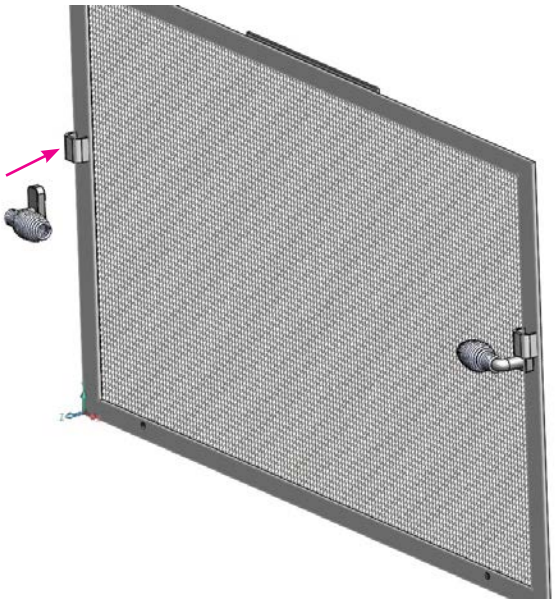

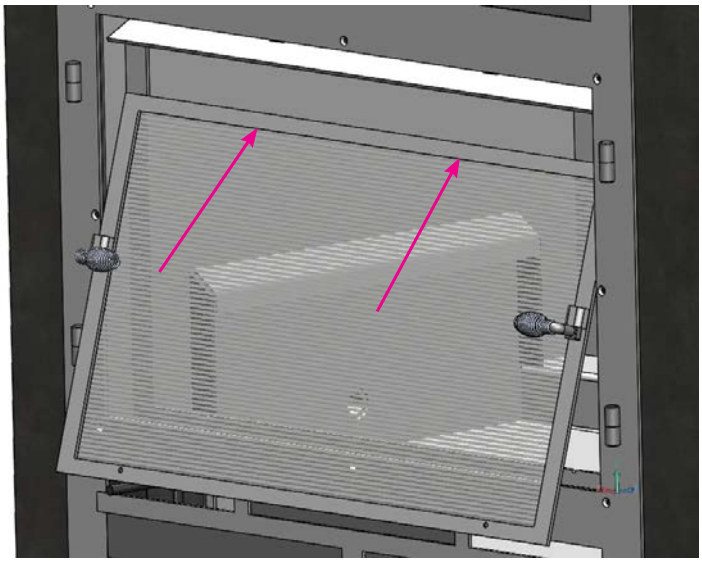

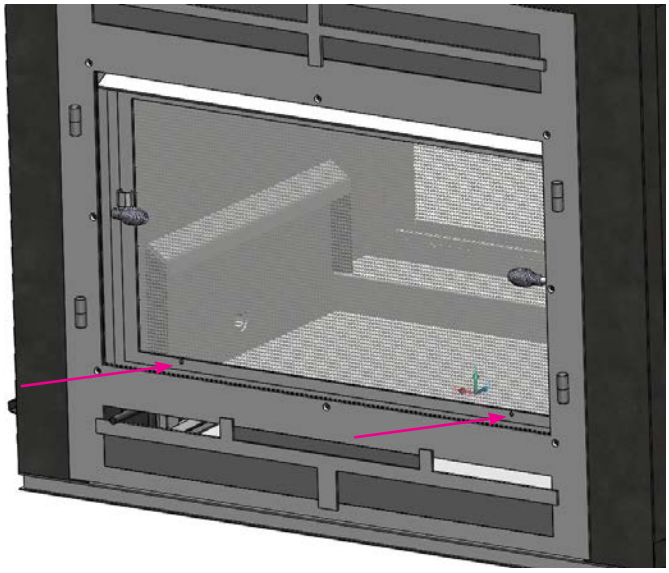

⚠ WARNING

Fire screen must be used when the fireplace doors are open or removed to prevent flying burning embers from coming out of the fireplace and landing onto combustible materials such as: rugs, carpets, clothing, etc.

Damper Stops are shaft collars that are required to be tightened when converting from a solid fuel to gas. These are shaft collars that are on the linkage slides. The damper and controls must be locked in the open position (controls all the way to the right). Once the controls have been set to the open position, lock the shaft collar with the set screws on the collars.

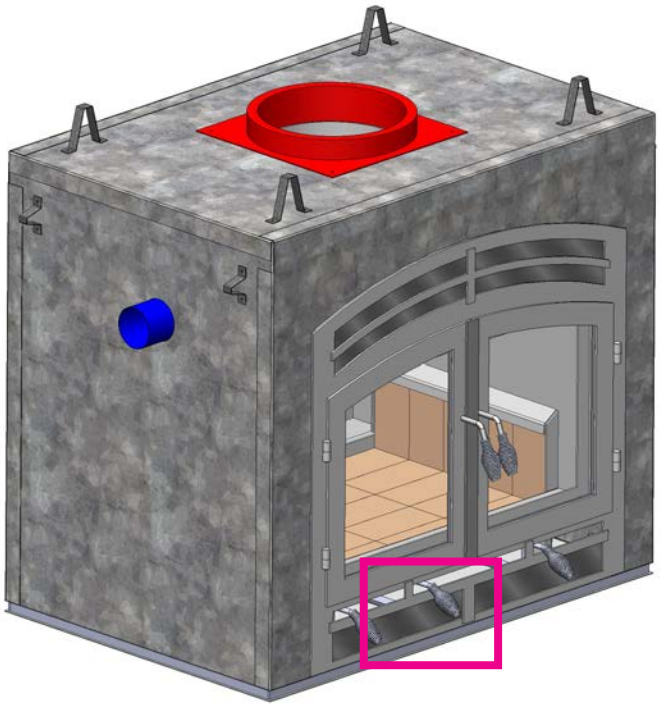

Shaft Collar
(Not tightened in this image)

Section 4: Maintenance

Section Includes

Firebrick Replacement
Fireplace Cleaning
Door Maintenance
Chimney Cleaning
Ash Removal

1. Fireplace inspection, maintenance, and cleaning of the chimney including the method of access through the top of the chimney (Chimney Cap) shall be conducted every burning season.
2. At any point do not over fire the unit until any part of the unit becomes red hot.
3. When wood is burned slowly, it produces tar and other organic vapors, which combine with expelled moisture to form creosote The creosote vapors condense in the relatively cool chimney flue of a slow burning fire. As a result, creosote residue accumulates on the flue lining. When ignited this creosote makes an extremely hot fire.
4. Creosote is formed by burning all but not limited to:
    - Wet, unseasoned wood
    - Newspaper and other fuel starting chemicals
    - Trash
5. Ensure that the damper is functioning and turn on the fan when burning.
6. This appliance is for SOLID WOOD, PROCESS WOOD, OR SOLID FUEL FIRELOGS.

4.1 Firebrick Replacement

Periodically the firebrick will need to be replace. It is common during burning for them to crack a small amount, but bricks with excess breakage should be replaced.

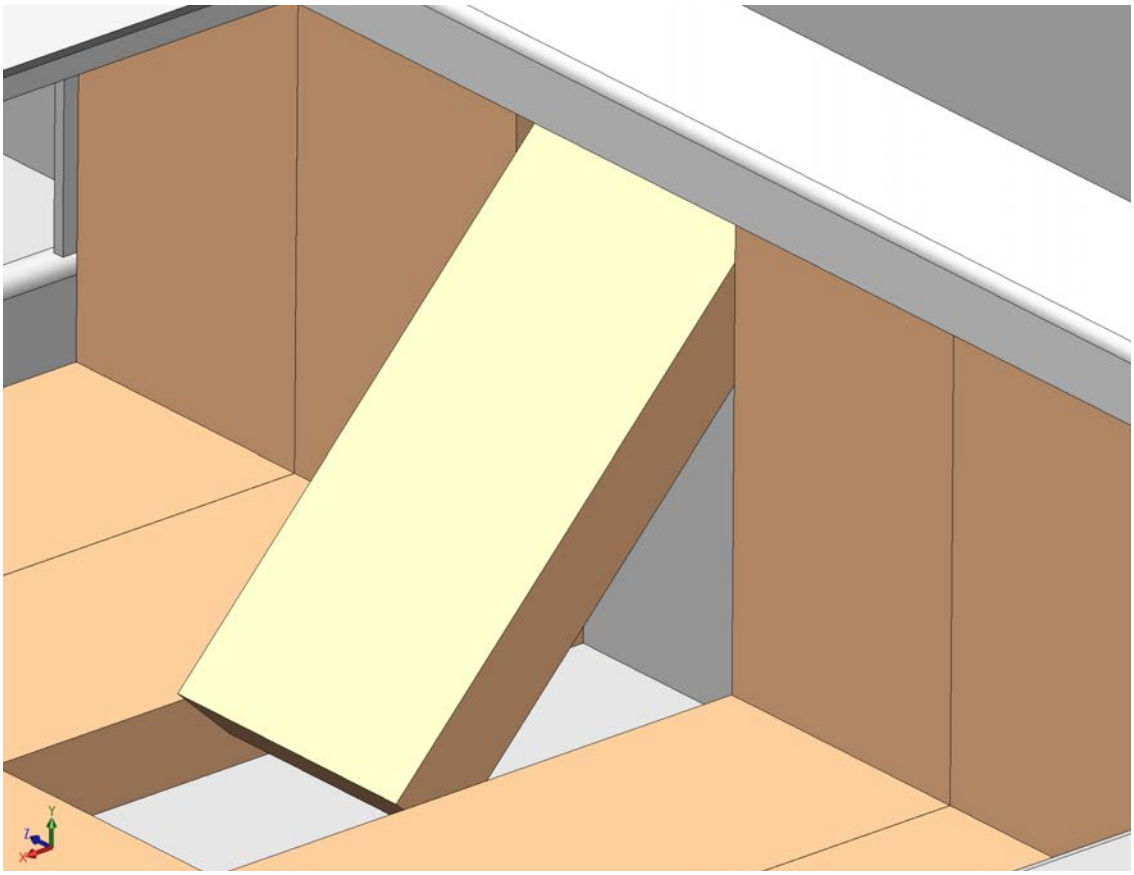

4.2 Fireplace Cleaning

Acucraft recommends using the Rutland glass cleaner on the glass and Speedy White cleaner for the remainder of the fireplace.

4.3 Door Maintenance

4.3.1 Glass and Gasket Replacement

Glass Replacement:

1. Remove the portion of the door gasket (fiber glass smoke rope on interior side and rubber gasket on the exterior side). Additional smoke rope can be purchased from Acucraft

Door Gasket Length in Feet	
HR 36 I/O	15’
HR 44 I/O	18’
HR 48 I/O	24’

2. Loosen the set screw that holds to glass in place and remove the top framing.

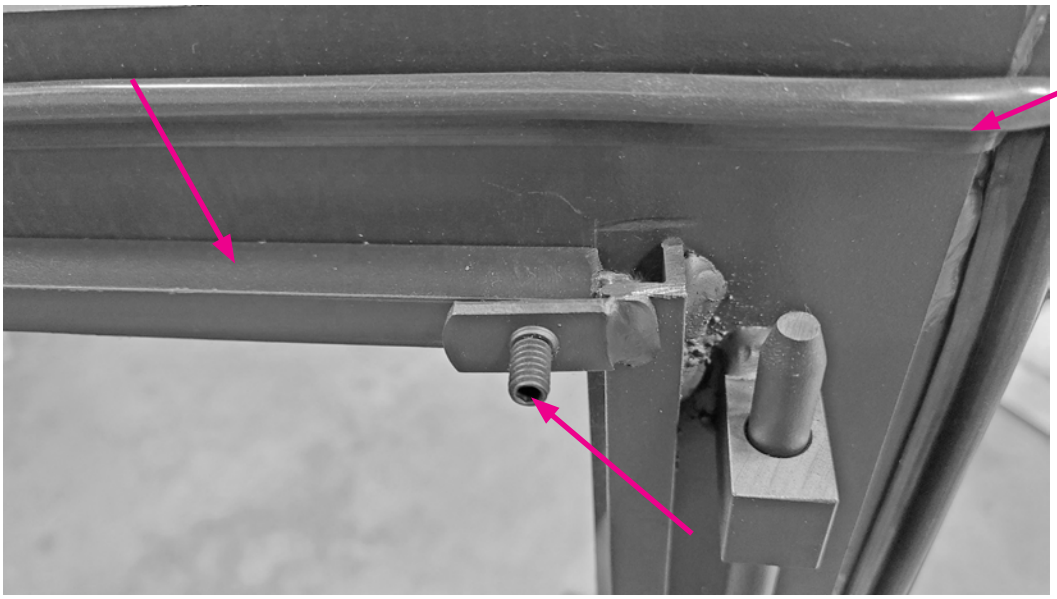

3. Loosen the set screw that holds to glass in place and remove the top framing.
4. Slide the pane of glass out though the top of the door.
5. Replace Glass.
6. Place the top frame on top of the new glass pane.
7. Tighten the set screw. BE CAREFUL NOT TO OVER TIGHTEN - THIS CAN BREAK THE GLASS IN THE CORNERS. Hand tight is sufficient.
8. Place new door gasket above the glass frame. This is attached using the adhesive on the back of the gasket.

4.3.2 Door Hinge Lubrication

The hinge pins need to be lubricated every spring and fall. This is done with the Loctite LB8008 lubrication. An image of the lubrication jar can be found in section 4.6.2.

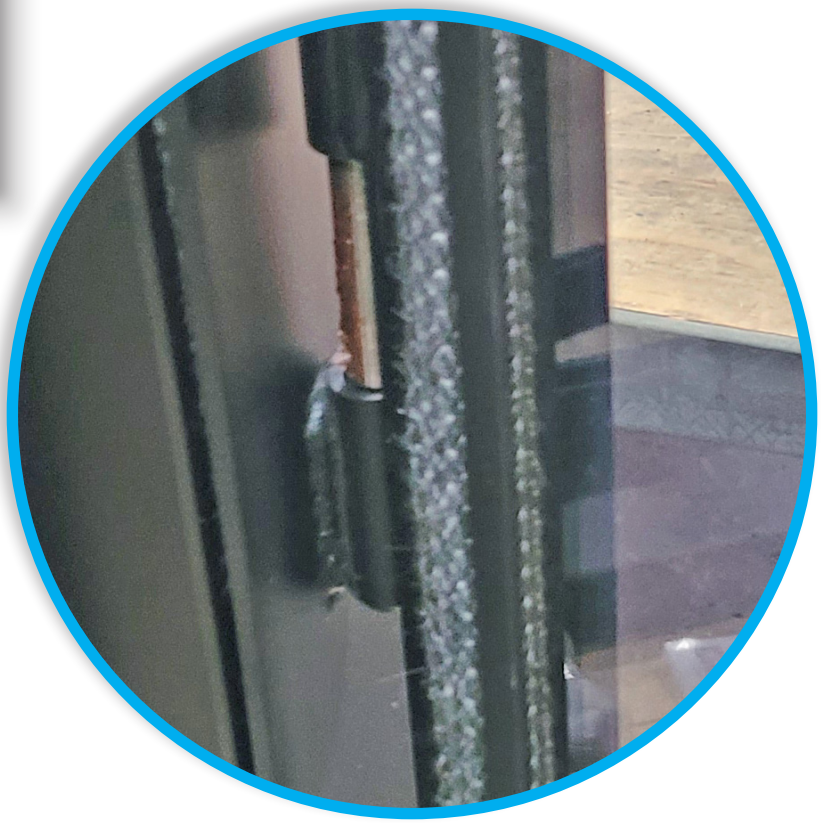

4.3.3 Linkage Lubrication

Lubrication of the linkages should be performed when doing maintenance on the fireplace. Put lubrication on the slide linkages and slide the handles back and forth to spread the lubrication evenly on the shaft.

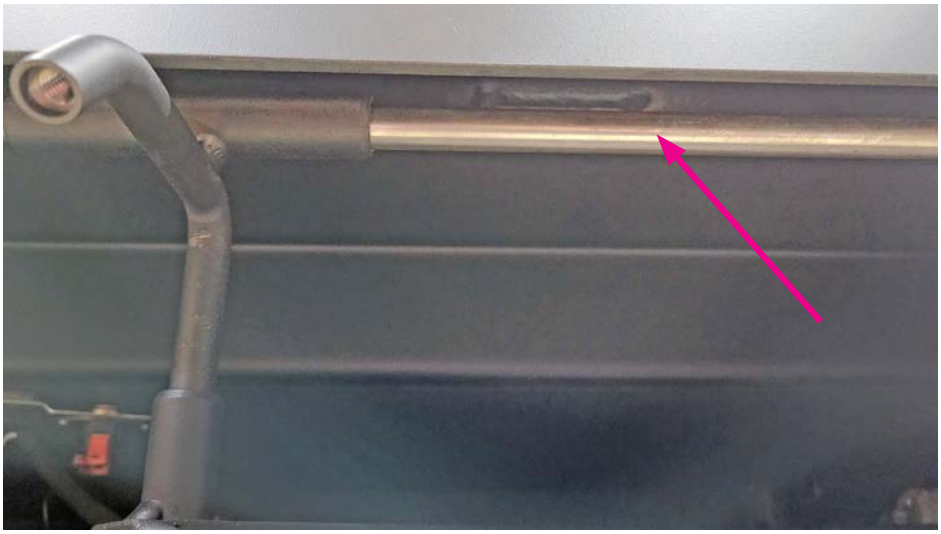

4.4 Chimney Cleaning

CREOSOTE AND YOUR CHIMNEY

When wood is burning slowly, it produces tar and other organic vapors. These vapors combine with expelled moisture to form creosote. The creosote vapors condense and accumulate on relatively cool surfaces such as the chimney flue inner wall. If this accumulation is allowed to build up, a chimney fire can occur as the creosote deposits will ignite and cause an extremely hot fire. Creosote is unburned fuel, excessive build up will catch on fire and cause a chimney fire.

Frequent inspection of the chimney is recommended. Even under normal burning conditions, creosote will accumulate over a period of time. To help reduce creosote buildup, we recommend burning only dry, seasoned wood.

At least two (2) chimney inspection and cleaning per burning season should be performed by a professional chimney sweep.

To prevent accelerated creosote buildup ensure that you allow the chimney to heat up while operating. This will improve your natural draft as well.

CHIMNEY CLEANING

Keep your chimney clean. Have your chimney cleaned by a qualified chimney technician. If you want to clean your chimney yourself, then clean your chimney using a nylon or poly chimney brush of the CORRECT SIZE. DO NOT use a brush that will scratch the stainless steel interior of the chimney.

Creosote Formation and Need for Removal:

If not removed periodically this deposit can ignite and cause possible damage to the chimney. The chimney should be inspected at least once every year during the heating season to determine if a creosote build up has occurred. If creosote has accumulated, it should be removed to reduce the risk of chimney fire.

A qualified chimney technician should inspect once every year to prevent creosote build up.

CHIMNEY CAP

The fireplace must have a properly installed and maintained chimney cap that prevents rain and snow from entering the system. Failure to do so will void the warranty.

Inspect the chimney spark screen and remove any creosote buildup with a wire brush. Any buildup will affect chimney draft and can cause smoke entering into the home when the doors are opened.

4.5 Ash Removal

⚠ WARNING

IMPROPER DISPOSAL OF ASHES RESULT IN FIRES. DO NOT DISCARD ASHES IN CARDBOARD BOXES, DUMP IN BACK YARDS, OR STORE IN GARAGES.

IF USING AN ASH VACUUM TO CLEAN UP ASHES, BE SURE THE ASHES ARE ENTIRELY COOLED. USING A VACUUM TO CLEAN UP WARM ASHES COULD CAUSE A FIRE INSIDE THE VACUUM.

A bed of ashes approximately 1”-2” deep should be left on the firebox bottom to help maintain a hot charcoal bed. When the fire has burned down and cooled, remove any excess ash. To remove the ash, follow the directions below.

1. After the last coal has extinguished, let the appliance and ashes cool.
2. Scoop the ash from the firebox into a metal, airtight, container with a lid. Cover the container with the lid and move the container away from the appliance onto a suitable non-combustible surface to ensure the ashes cool. Dispose of the ashes.
3. If the ashes are disposed of by burial in soil or otherwise locally dispersed, they should be retained in the closed container until all cinders have throughly cooled.

Section 5: Warranty

Section Includes

Product Warranty

ACUCRAFT®
Fire Reimagined.

Acucraft stands by their fireplaces. To ensure the best customer service, use the QR code to fill out the warranty registration form. The warranty terms can be found on the following pages.

SCAN ME

ALL WARRANTIES EFFECTIVE DATE OF SHIPMENTS

MANUFACTURER'S LIMITED LIFETIME WARRANTY

EXCEPT AS EXPRESSLY SET FORTH BELOW, and subject to the validation requirements set forth below, Acucraft, Inc., as a manufacturer of the Acucraft Fireplace System ("Manufacturer") warrants each Acucraft Fireplace System (the "System") to be free of defects in material or workmanship for so long as the original owner or purchaser thereof shall own the System and the installation site thereof.

ONE YEAR WARRANTY ON CERTAIN PARTS

The Manufacturer warrants those parts of the System listed immediately below to be free of defects in material or workmanship for a period of One (1) year, provided that the original owner or purchaser thereof shall continue for that period of time to own the System and the installation site thereof. A warranty credit will be issued upon receipt and testing of defective part.

Firebrick

Door Gasket

Firescreen

Blower Assembly

Thermostat Control

NO WARRANTY ON FINISH OR PLATING

The Manufacturer does not warrant any finish or plating on the System or any part thereof.

NO IMPLIED WARRANTY

No representations, warranties or agreements, either expressed or implied have been made or are intended to be made by either the Manufacturer or the sale of the System except as expressly set forth in this Manufacturer's Limited Lifetime Warranty. Neither the Manufacturer nor the sale of the System make any warranty, either expressed or implied, with respect to the fitness of the System for the buyer's purpose.

LIMITED OBLIGATION PURSUANT TO WARRANTY

The obligation of the Manufacturer and/or seller of the System pursuant to this Manufacturer's Limited Lifetime Warranty shall be limited to the delivery of a good, merchantable unit, and if necessary, the repair or replacement at the option of the Manufacturer or seller of any defective part or unit. Neither the Manufacturer nor the seller shall be liable for any incidental or consequential damages.

WARRANTY VOID UNDER CERTAIN CIRCUMSTANCES

Improper Installation: No warranty of any sort is made, or is to be implied, hereunder with respect to the installation of the System or the labor involved in such installation. Use of any materials in the installation of the System which are not provided with the System (except such as may be only incidental to such installation) shall cause this **Manufacturer's Limited Lifetime Warranty** to be void. Over burning of a fireplace (burning to the point of causing the lip holding the firebrick to move or warp) shall cause this **Manufacturer's Limited Lifetime Warranty** to be void.

Material Alteration: Material alteration of any parts or supplies provided with the System for the purpose of proper installation shall cause this **Manufacturer's Limited Lifetime Warranty** to be void.

Subsequent Owners: This **Manufacturer's Limited Lifetime Warranty** shall terminate and be void upon the sale of the System, or the installation site thereof, by the original owner or purchaser of the System.

NO TRANSFER OF WARRANTY

The benefits of this **Manufacturer's Limited Lifetime Warranty** extend to the original purchaser or owner of the System and may not be transferred to any subsequent purchaser or owner without the expressed written consent of the Manufacturer.

VALIDATION OF WARRANTY

The online warranty form* must be submitted to the Manufacturer within thirty (30) days from the date of purchase of the System in order to validate this **Manufacturer's Limited Lifetime Warranty**.

How to Register a Claim against Warranty

In order for any claim under this warranty to be valid, Acucraft must be notified of the claimed defect by emailing service@acucraft.com, as soon as reasonably possible after the defect is discovered. Claims against this warranty must include the date of installation, and a description of the defect.

*Acucraft's online warranty form can be found at: http://www.acucraft.com/warranty

Last Updated: 11/22/2016

ACUCRAFT®

Fire Reimagined.

888-317-6499
www.acucraft.com
19672 172nd Street NW
Big Lake MN, 55309

Minimum Framing Dimensions

2.2.2 Rectangular Framing

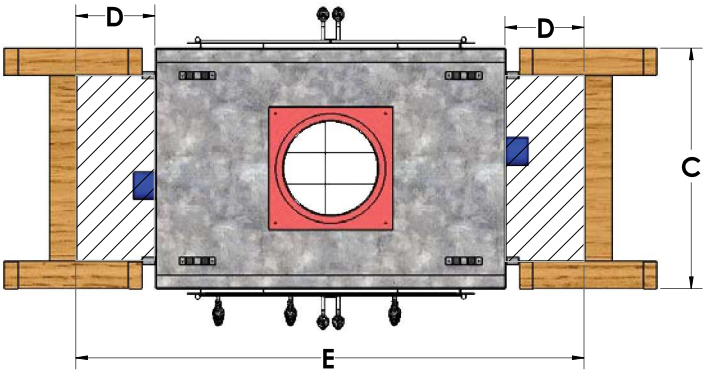

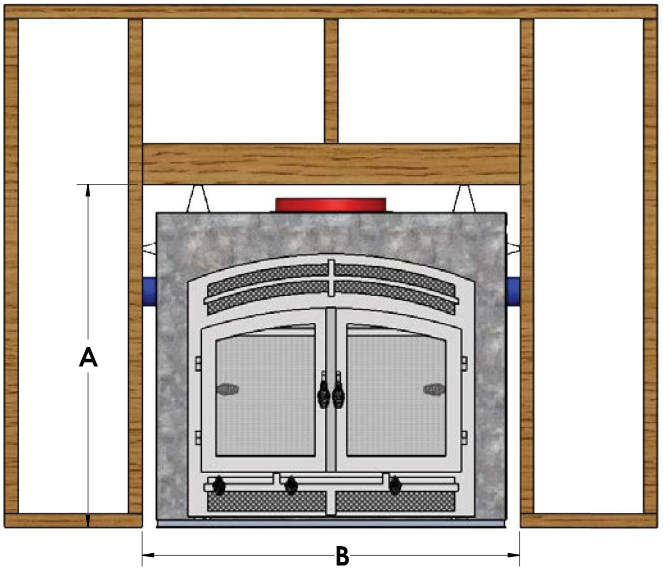

INSTALLER NOTE

SPACE REQUIRED FOR COMBUSTION AIR INTAKES ON BOTH SIDES IMMEDIATELY OFF FIREPLACE. (HATCHED AREA)

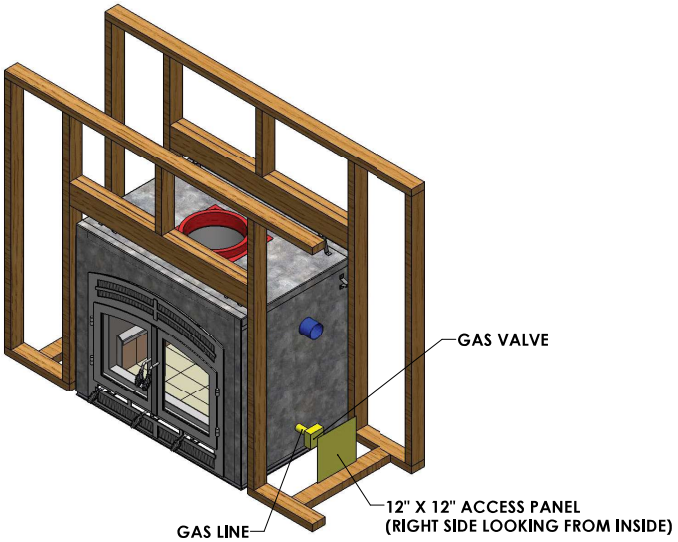

INSTALLER NOTE

IF CONVERTING TO GAS IN THE FUTURE, A 12” X 12” ACCESS PANEL NEEDS TO BE FRAMED IN

	A (ICC Flue)	A (Metal Fab Flue)	B	C	D	E
36IO	50”	58 1/2”	55”	35”	9 1/2”	70”
44IO	54”	62 1/2”	63”	35”	10 1/2”	80”
48IO	70 1/2”	79”	67”	42 1/2”	11 1/2”	86”

* Additional height is required above the fireplace framing for Metal Fab draft hood connector to slide into the cavity. Framing needs to be 8 1/2” minimum above the top of the fireplace itself.

INSTALLER NOTE

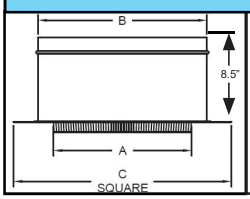

Note: Metal Fab draft hood connector is TALLER than the ICC anchor plate and framing must be accounted for this extra height

IX. MATCH. MAXIMIZE.

COLORS HAVE VARIATION FROM HERE TO THE REAL WORLD. PLEASE ORDER A SAMPLE AND PHYSICALLY REVIEW YOUR CHOICE TO ENSURE SATISFACTION.

BRILLIANT WHITE 29/26	ALAMO WHITE 29/26	ASH GRAY 29/26	LIGHT STONE 29/26	TAUPE 29/26
DARK GREEN 29/26	RUSTIC RED 29/26	DARK RED 29/26	BURGUNDY 29/26	GALLERY BLUE 29/26
TAN 29/26	BROWN 29/26	BURNISHED SLATE 29/26	PEWTER GRAY 29/26	CHARCOAL 29/26
MATTE BLACK 29/26	METALLIC COPPER 26	BRILLIANT WHITE LINER 29	ACRYLIC GALVALUME 29/26	ACRYLIC GALVANIZED 29
BRILLIANT WHITE TXT 26	ALAMO WHITE TXT 26	ASH GRAY TEXTURED 29/26	LIGHT STONE TEXTURED 26	TAUPE TEXTURED 29/26
BUCKSKIN TEXTURED 26	DARK GREEN TEXTURED 29/26	RUSTIC RED TEXTURED 29/26	BURGUNDY TEXTURED 29/26	GALLERY BLUE TEXTURED 29/26
SILVER SAGE TEXTURED 26	DARK BROWN TEXTURED 29/26	BURNISHED SLATE TEX. 29/26	CHARCOAL TEXTURED 29/26	MATTE BLACK TEXTURED 29/26
ROSE WOOD PRINT 26	WEATHERED WOOD PRINT 26	WESTERN RUST PRINT 26		

METAL EXTERIORS

SIGNATURE SERIES

ELITE RIB

ROOF & WALL SYSTEM

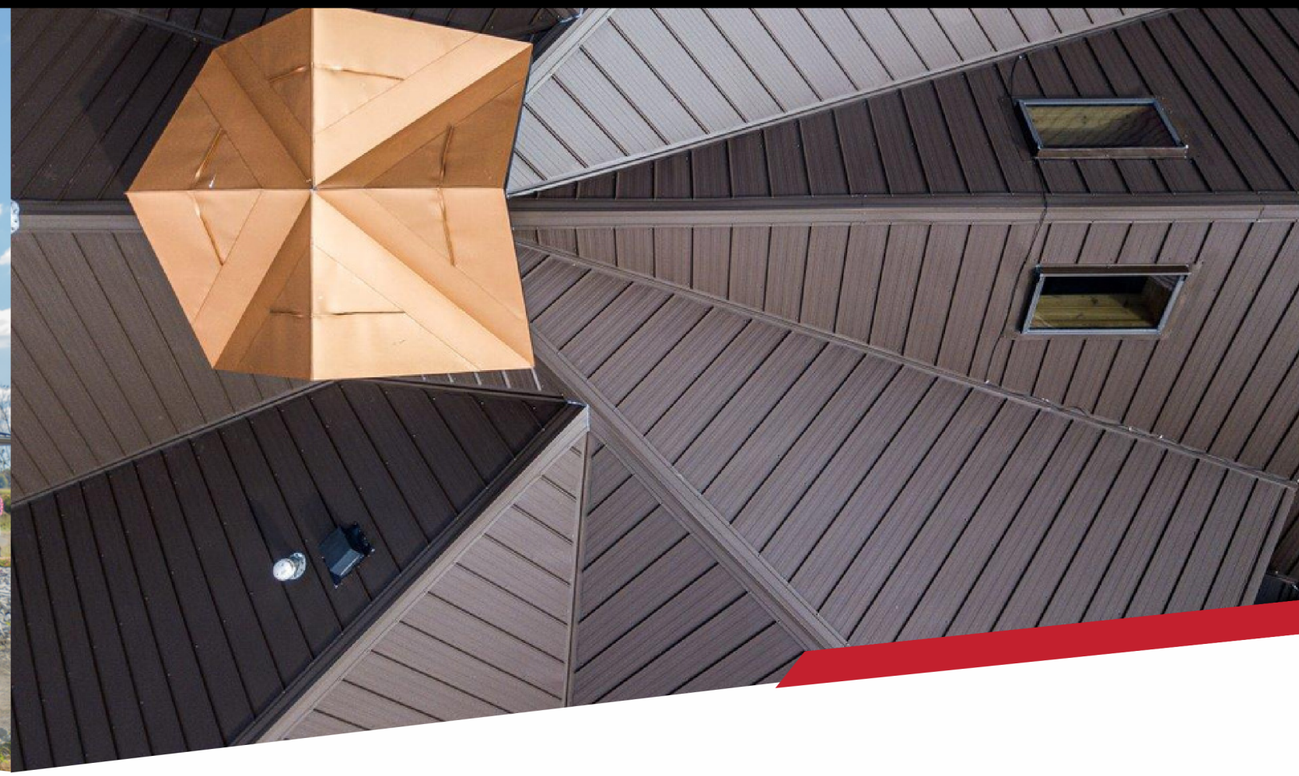

DESIGNED FOR DISTINCTION

ELITE RIB ROOF / WALL SYSTEM

Introducing Metal Exteriors' Elite Rib Panel - the premium choice for residential roofs and sidewalls, offering unmatched style and performance at an affordable price! This panel boasts a unique textured finish that enhances safety during installation and reduces glare. Elevate your home's aesthetic with the Elite Rib Panel from Metal Exteriors - luxury at an affordable price for all your residential needs.

QUALITY-CENTRIC SPECIFICATIONS

- 36" PANEL COVERAGE, 12" RIB SPACING
- SLEEK PROFILE WITH 3/4" RIB HEIGHT
- AVAILABLE IN 26 AND 29 GAUGE STEEL
- 40-YEAR PAINT WARRANTY
- 50 YEAR FASTENER WARRANTY WITH UPGRADE

TRY IT WITH TEXTURE

Not only does this system offers both a 40-year warranty and a 50-year fastener warranty, but our experts recommend it in a textured finish. This finish provides a more slip-resistant surface for installation and maintenance as well as adding a unique matte finish. It is just another way Metal Exteriors offers to make your project uniquely yours.

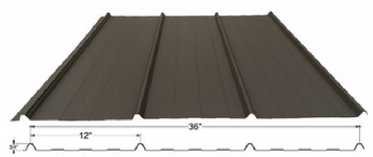

METAL EXTERIORS

ELITE BATTEN

PATENT PENDING SIDING SYSTEM

36 INCHES

- CUSTOM LENGTH PANELS. STANDARD 10'3" BATTENS.
- 36 INCH PANELS. BATTENS 12 INCHES ON CENTER
- LOCK OUT WEATHER WITH HIDDEN FASTENERS
- 40+ FINISHES AVAILABLE

METAL EXTERIORS

METALEXTERIORS.COM

COLOR CHART

A POWERFUL COMBINATION

Elite Batten features our patent-pending design that securely locks a strong batten over the Elite Rib Panel, combining a hidden fastener system with the reliability of our Elite Rib exposed fastener panel.

The 36-inch Elite Rib panels are easy to install on both sheathing (recommended) and framing (optional).

Enjoy the benefits of Elite Batten: efficient installation, superior performance, and a variety of finish options to suit your project.

1. LINE UP

Elite Rib panel is lined up with structure according to the Installation Guide.

2. LOCK IN

Place self-aligning clip at specified distances along the rib. Fasten at center.

3. SNAP ON

Snap the batten into place over each clip. Ensure a tight fit and enjoy!

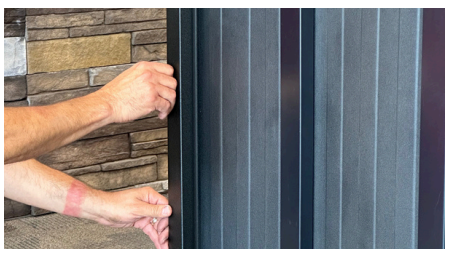

Parallel and Elite Rib
Installation Guide

METAL EXTERIORS

CUSTOM METAL ROOFING AND SIDING

Table of Contents

Important Information 3
Handling Material 3
Delivering Material 4
Mechanical Unloading 4
Design Considerations 4
Fastening and Closure Applications 5
Field Cutting and Touch Up 6
Touching Up Panels with Paint 6
Ventilation 6
Accessories 6
Trim Profiles/Post Frame 7-9
Fastening Patterns 10
Trim Detail 11-14
Care and Maintenance 15

IMPORTANT INFORMATION

Prior to placing any orders, on site measurements need to be taken to verify the actual measurements.

This installation manual is designed to be used as a guide when installing specific metal panels. It is the responsibility of the installer/contractor to ensure the safe installation of this metal roofing system.

The drawings and depictions are for the purpose of illustration only and may not be applied to every product line or building design. All of the products installed should meet or exceed applicable building codes for the area of installation. We recommend following all building regulations and industry best practices.

Metal Exteriors LLC is not to be responsible for the performance of the roofing system when it is not installed according to the instructions outlined in this installation manual. If there is any conflict between this manual and the actual construction drawings, the construction drawings should take precedence.

Metal Exteriors LLC reserves the right to modify, without notice, any details, recommendations or suggestions. Any questions you may have regarding proper installation of the roofing system should be directed to your Metal Exterior's Sales Representative.

SAFETY

Always use extreme caution when installing any metal panels.

Do not use roofing panels as a walking platform, as the panels are not designed to withstand a great deal of weight placed on an edge of the panel. Never stand on a panel before it is fully secured and remember that the panel can be very slippery under certain conditions. We recommend that the installation of metal roofing and siding be supervised by a knowledgeable professional.

HANDLING MATERIAL

When handling painted metal panels, care should be taken to not drop, scratch, or drag panels across the ground, any rough surface, or another panel. We recommend wearing clean gloves whenever handling or cutting metal materials. Soft rubber soled shoes will help ensure proper grip and keep the panels from scuffing.

Great caution needs to be taken when handling panels in windy conditions, especially when wind speeds exceed 10 mph, due to the kite-like effect of the panel. We recommend trained professionals oversee any weather or jobsite conditions that may become a working hazard.

Always carry panels by the edge so the panels are held vertical to the ground. Never carry the panels horizontally with the ground, as this may result in buckling of the panel.

While in most cases a single person can handle a panel of up to 8' in length, we recommend that additional people be placed every 10' along the entirety of the panel on larger panels.

DELIVERING MATERIAL

The installer is responsible for unloading material from the delivery truck and having the proper equipment to unload the delivery.

Each metal order is delivered by trained professionals.

Each load should always be checked by the installer with the driver present to check for damages that may have occurred while the metal has been delivered or unloaded. If the order has damaged pieces of metal or property, the installer should contact Metal Exteriors as soon as possible.

MECHANICAL UNLOADING

Crane: When panels are greater than 24' in length, a crane should be used. To evenly distribute the weight of the bundle, spreader bars must be used. Never let more than 1/4 of the crate be lifted without support. Never use chains to unload crates, always use a soft rope or strap.

Forklift: If panels do not exceed 24' in length, a forklift can usually be used to unload materials from the truck. Ensure the forks are at maximum separation. Avoid any rough terrain.

DESIGN CONSIDERATIONS

Always check with an Engineer/Local Building Codes, before installation for any codes that apply to the area of installation.

Metal Exteriors has designed their metal panels to be installed over open framing or directly over a plywood/OSB substrate 30# or equal UDL moisture barrier. An ice guard may be required (check your Local Building Codes) in some instances.

Installing either a new or existing roof, the installer should check if roof deck is square before installing any metal panels.

Always have an authorized contractor inspect the roof of an existing wooden substrate, for any inferior details such as rot, sagging, or possible structural failure. Before installation, make sure all nails, staples or protruding hardware are removed from existing roof.

Never let Galvalume panels come into contact with any water runoff from copper, lead, or uncoated steel materials.

FASTENING AND CLOSURE APPLICATIONS

SCREWS:

It is recommended to use a plated or painted screw, Type A or driller tip with a flat rubber washer, when using screws as a fastener. Using a screw gun with the appropriate speed and torque settings will help prevent possible damage to the panel and fastener head. Typically 80 screws are used per square for 36" Parallel Rib Panels.

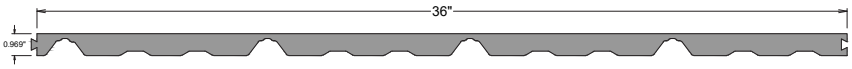

Parallel Rib Outside Foam Closure

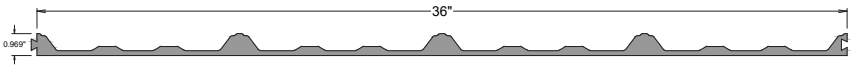

Parallel Rib Inside Foam Closure

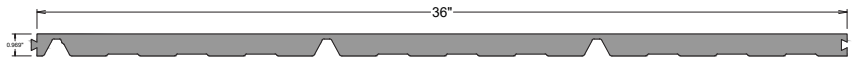

Elite Rib Outside Foam Closure

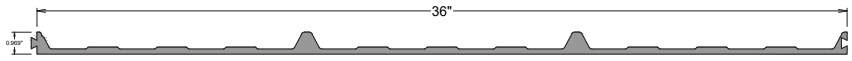

Elite Rib Inside Foam Closure

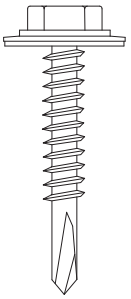

1.5" Metal-to-Wood Screw - 250 Ct. Bags

FIELD CUTTING AND TOUCH UP

Saftey glasses must be worn at all times while cutting metal panels.

For cutting the metal in the field, tin snips or electric nibblers are recommended. Cutting the steel causes "slivers" or small metal particles to collect on the edge of the metal panel. Remove these immediately as they will cause damage to the finish and shorten the life of the product.

TOUCHING UP PANELS WITH PAINT

A factory baked on finish has been applied to the painted panels and trim components, some handling and installing of these product may result in minor nicks or scratches to the painted finish. Matching touch up paint from Metal Exteriors is available. Use a small brush to apply touch up paint, a few coats may be needed in some situations.

VENTILATION

To prevent condensation from forming on the under inside of the roof, the use of vapor barriers and vented closures are necessary. Condensation occurs when moisture laden air comes in contact with a surface that has a temperature equal or below the dew point of the air. This can cause several potential issues, all of which can be avoided with the proper ventilation products and techniques.

It is recommended that you discuss the proper product to use with your Metal Exterior's Sales Representative.

ACCESSORIES

Emseal Expanding Foam

Flex-O-Vent

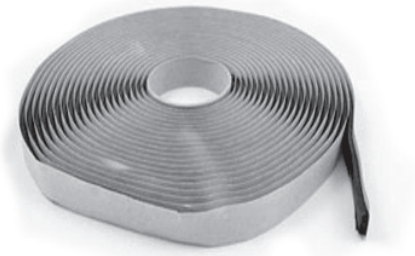

Caulk Tape

Roof Boot

TRIM PROFILES/POST FRAME

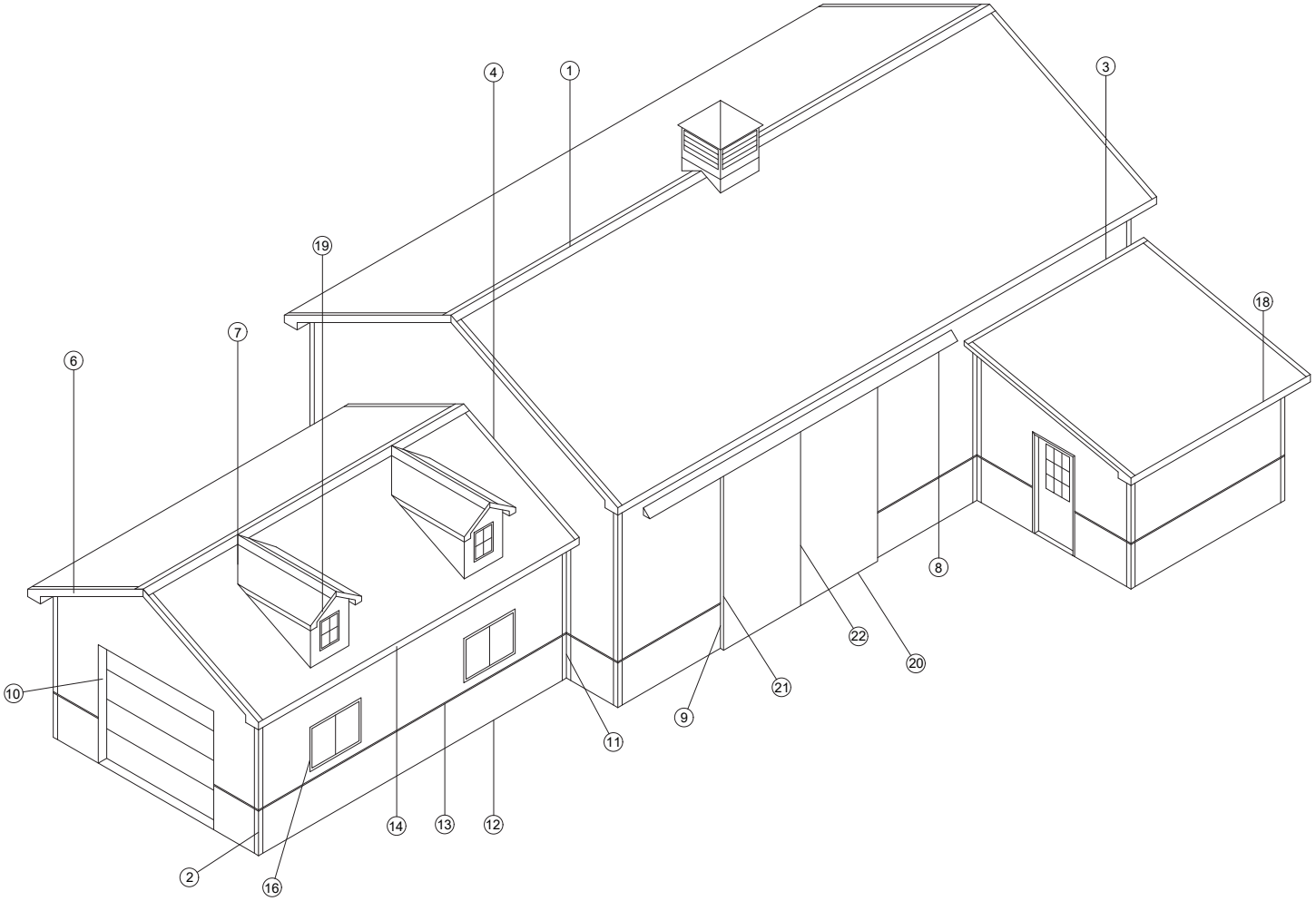

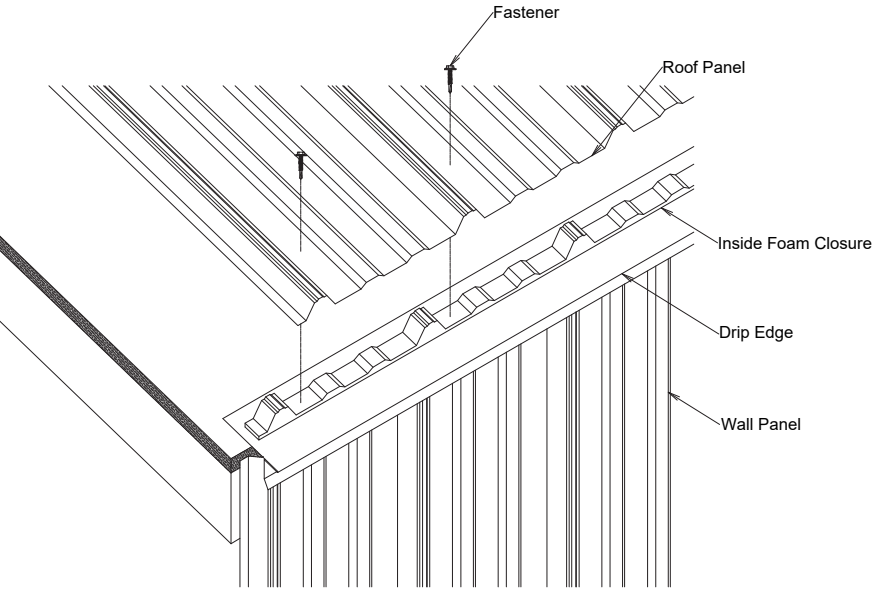

Eave Detail

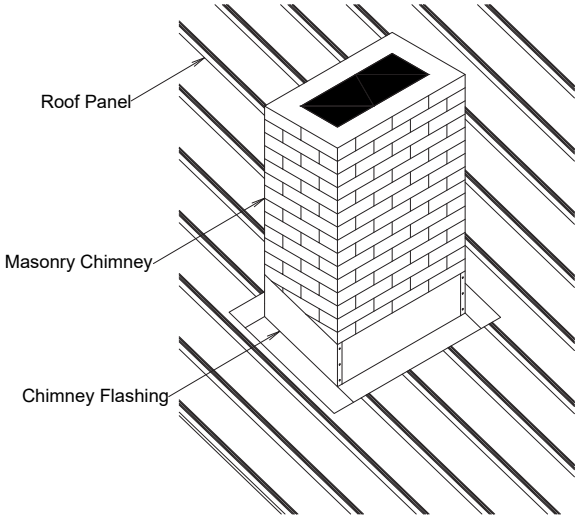

Chimney Flashing Detail

TRIM PROFILES/POST FRAME

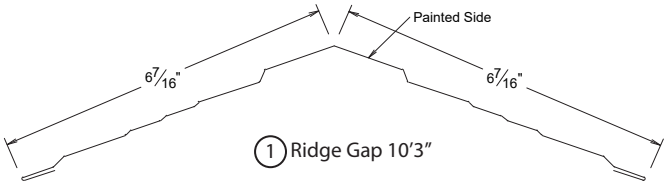

1 Ridge Gap 10′3″

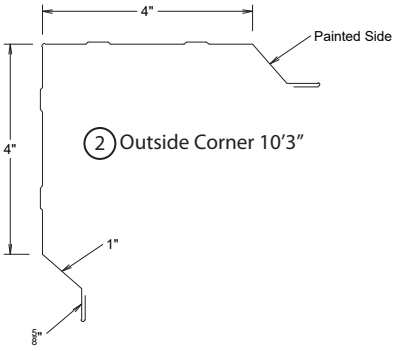

2 Outside Corner 10′3″

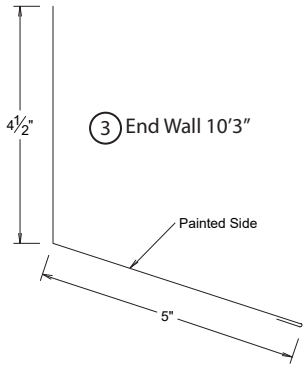

3 End Wall 10′3″

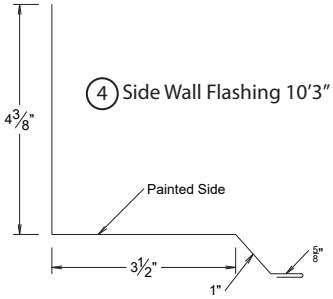

4 Side Wall Flashing 10′3″

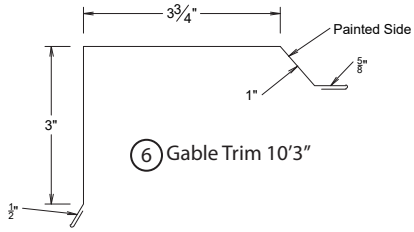

6 Gable Trim 10′3″

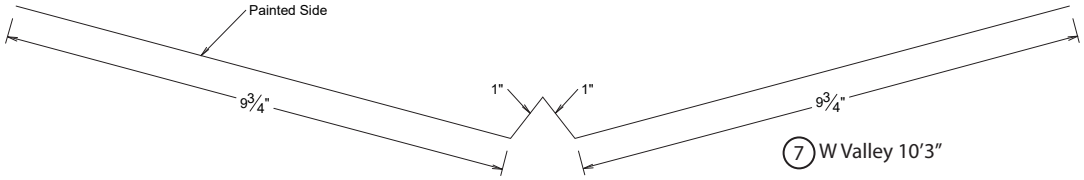

7 W Valley 10′3″

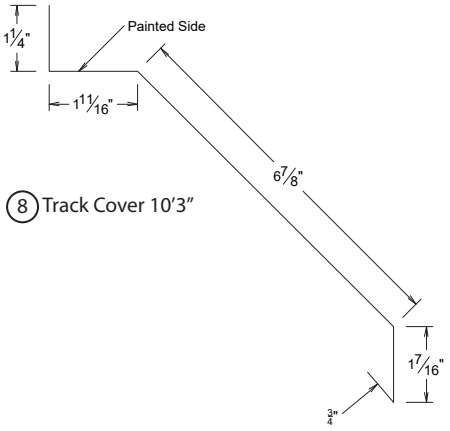

8 Track Cover 10′3″

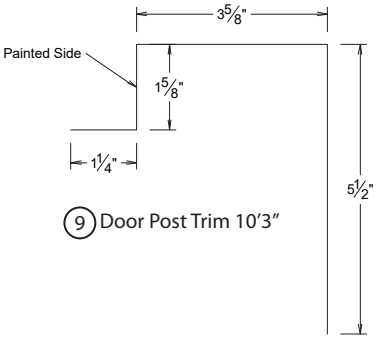

9 Door Post Trim 10′3″

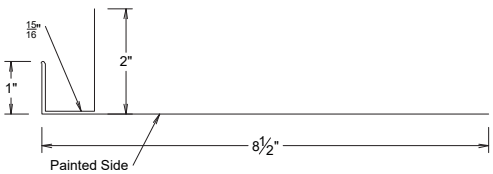

10 Overhead Door Trim 10′3″

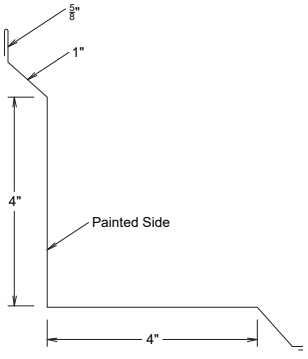

11 Inside Corner 10′3″

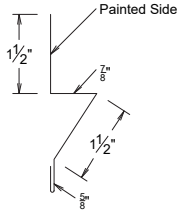

12 Rat Guard 10′3″

TRIM PROFILES/POST FRAME

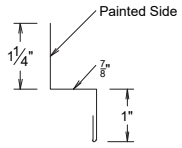

(13) Double Angle 10′3″

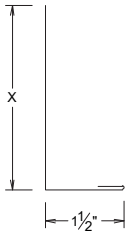

(14) Fascia Trim
X = 3 1/2″
5 1/2″
6″
7 1/4″
9 1/4″
11 1/4″

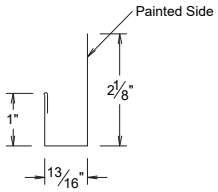

(16) J Channel 10′3″

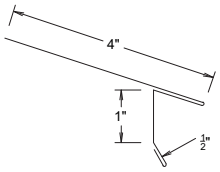

(18) Drip Edge 10′3″

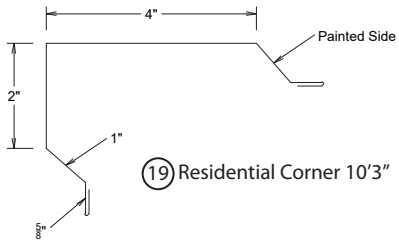

(19) Residential Corner 10′3″

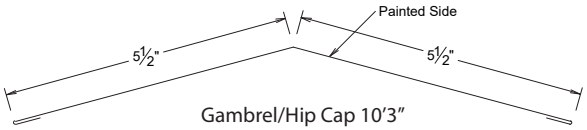

Gambrel/Hip Cap 10′3″

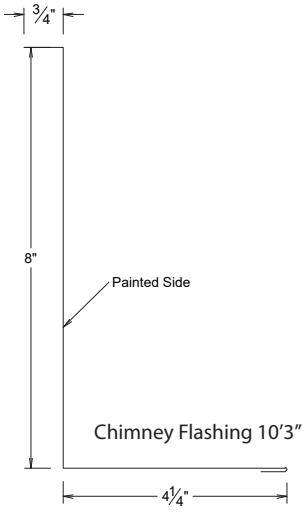

Chimney Flashing 10′3″

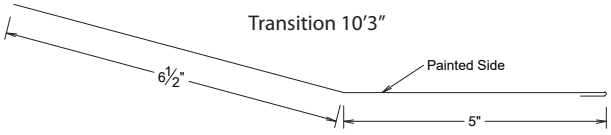

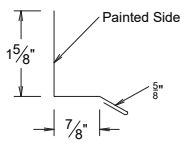

Drip Flashing 10′3″

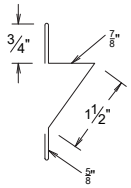

Snow Guard

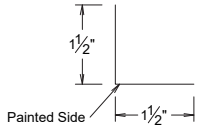

Mini Angle 10′3″

FASTENING PATTERNS

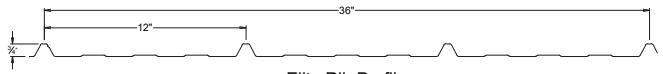

Elite Rib Profile

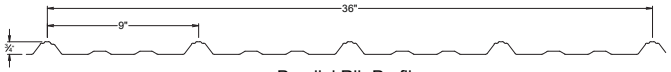

Parallel Rib Profile

Fastening Pattern for Elite Rib - Field of Panel

Fastening Pattern for Elite Rib - End of Panel

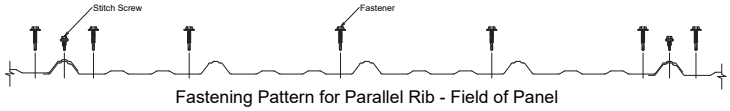

Fastening Pattern for Parallel Rib - Field of Panel

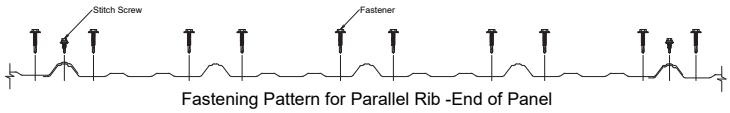

Fastening Pattern for Parallel Rib -End of Panel

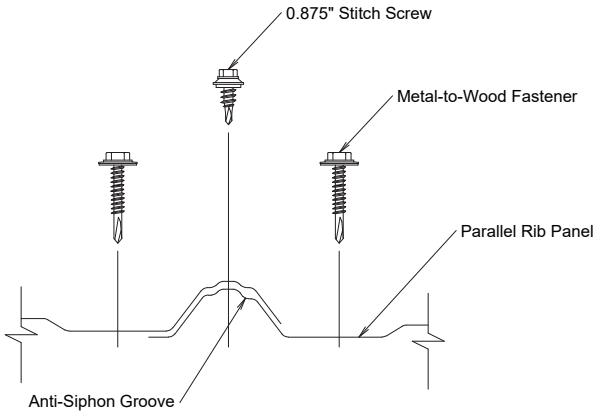

Parallel Rib Panel Lap Detail

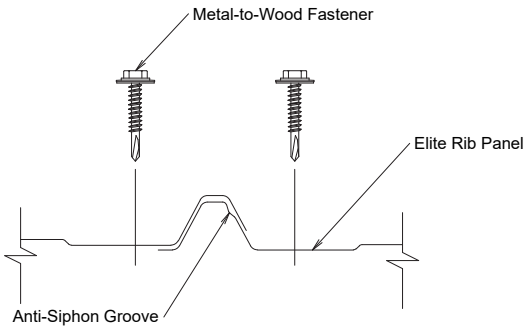

Elite Rib Panel Lap Detail

TRIM DETAIL

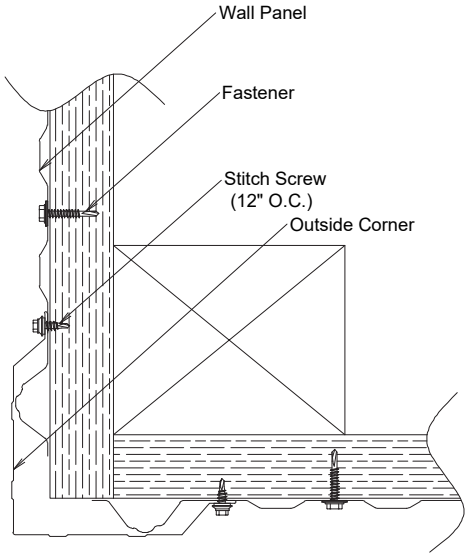

Outside Corner

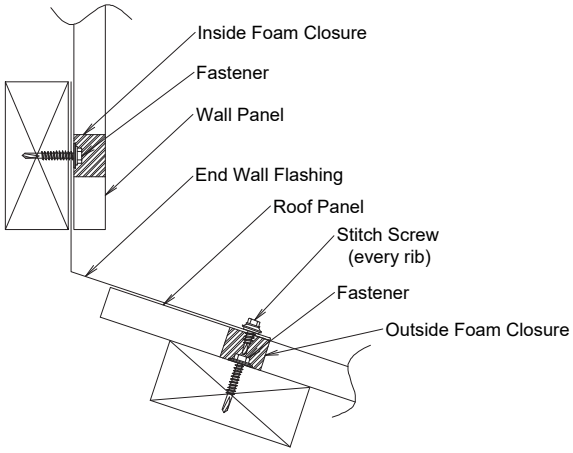

End Wall Flashing

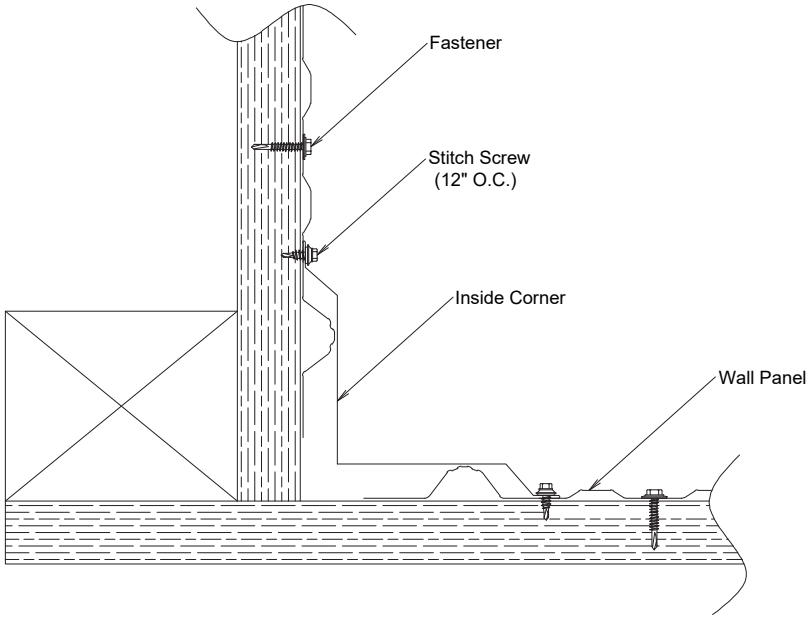

Inside Corner

TRIM DETAIL

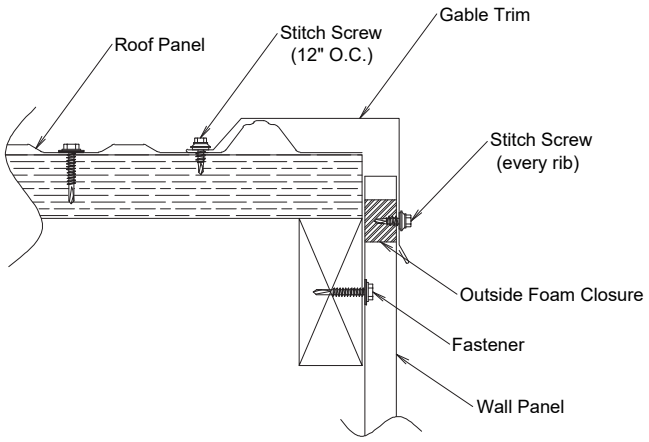

Gable Trim

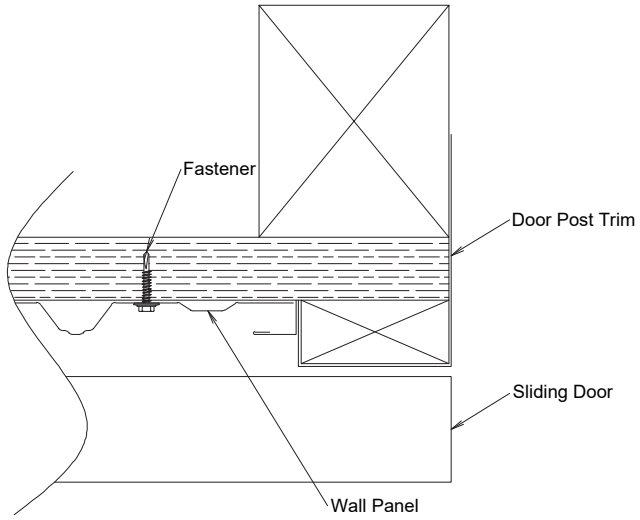

Door Post Trim

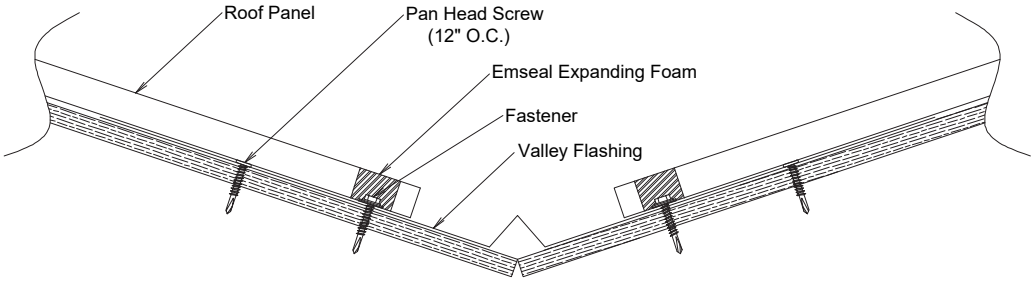

Valley Flashing

TRIM DETAIL

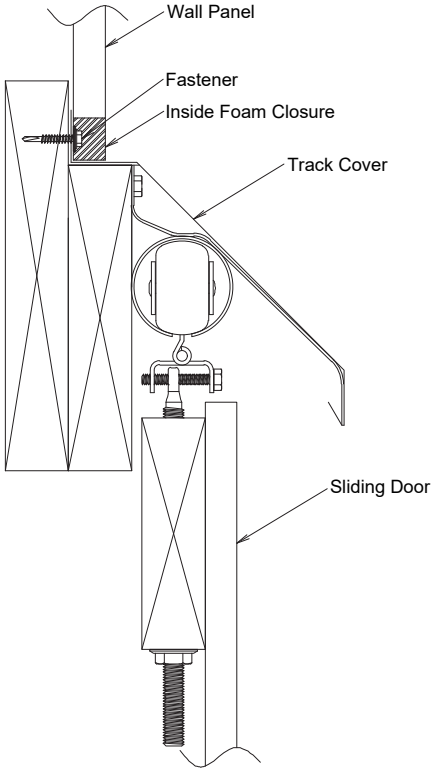

Door Track

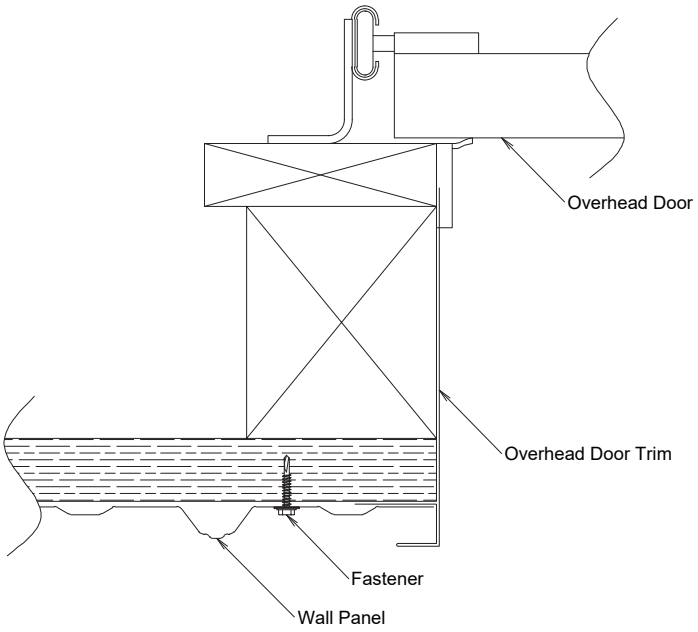

Overhead Door Trim

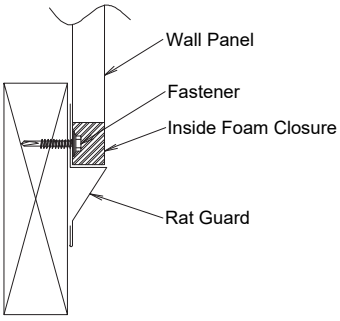

Rat Guard

TRIM DETAIL

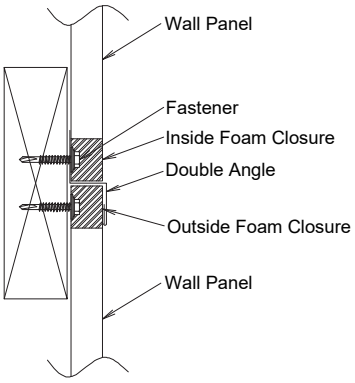

Double Angle

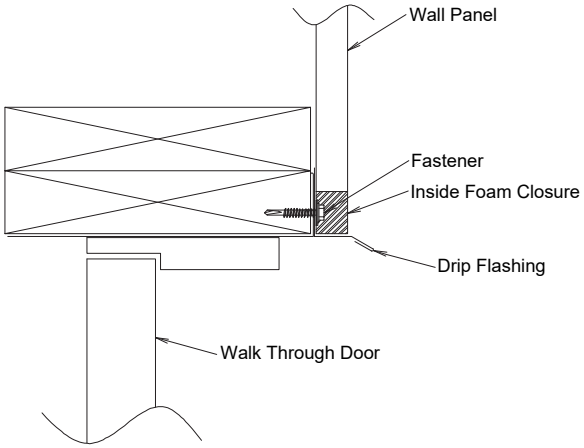

Drip Flashing

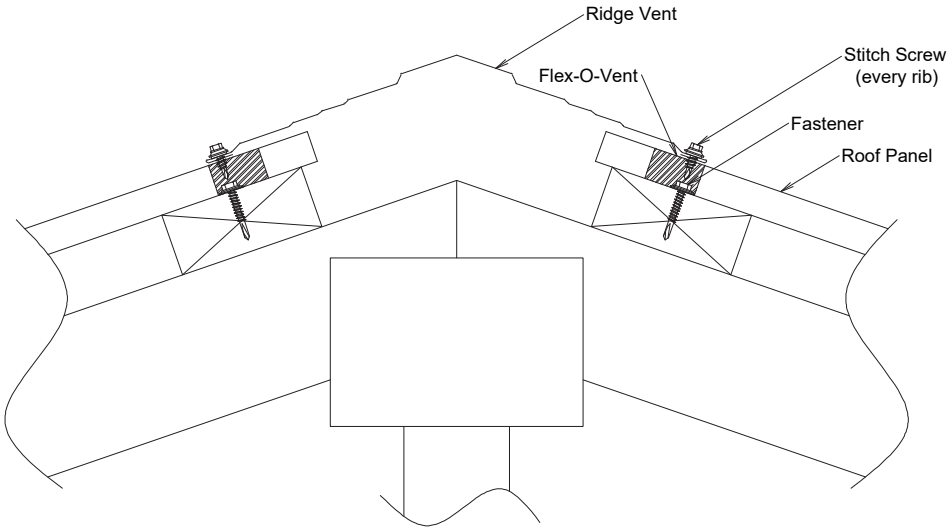

Ridge Cap

CARE AND MAINTENANCE

While the factory applied finishes are very durable and will last many years, it may eventually become necessary to clean them. A light cleaning is usually all that is needed, and with the proper products you can easily restore the panels to their original beauty and appearance.

Dirt pickup may cause slight discoloration of the paint when it has been exposed to dirt saturated atmospheres for extended periods of time. Some chalking may also occur in areas of extreme sunlight exposure.

Simply spraying the panels with plain water using a water hose or a pressure washer will be enough in many cases where cleaning is needed. In areas that have heavier dirt deposits, a cloth or soft bristle brush and a solution of water and detergent (1/2 cup of Tide or similar laundry detergent per gallon of water) may be used, followed by a thorough rinse with clean water.

Mildew can occur in areas with high humidity but is not normally a problem due to the mildew resistance of the baked on finish that is used in manufacturing.

In a large bucket mix together and apply to the needed area with a mop or soft bristled brush. Rinse thoroughly after applying and repeat as necessary.

1 cup trisodium phosphate
1-1/2 quart of sodium hypochlorite solution
1 cup laundry detergent
4 quarts clean water

Strong solvents or abrasive cleaners should not be used. Most solvents are flammable and should be handled with care. Do NOT use wire brush, abrasives, or cleaning tools which may damage the coating surface.

METAL EXTERIORS

CUSTOM METAL ROOFING AND SIDING

8511 Shiloh-Norwalk Rd., Shiloh, Ohio 44878

(419) 896-2200

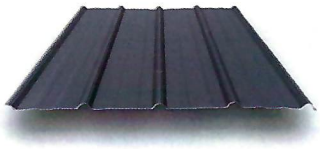

PARALLEL RIB

ROOF & WALL SYSTEM

METAL EXTERIORS
ROOF AND WALL SYSTEMS

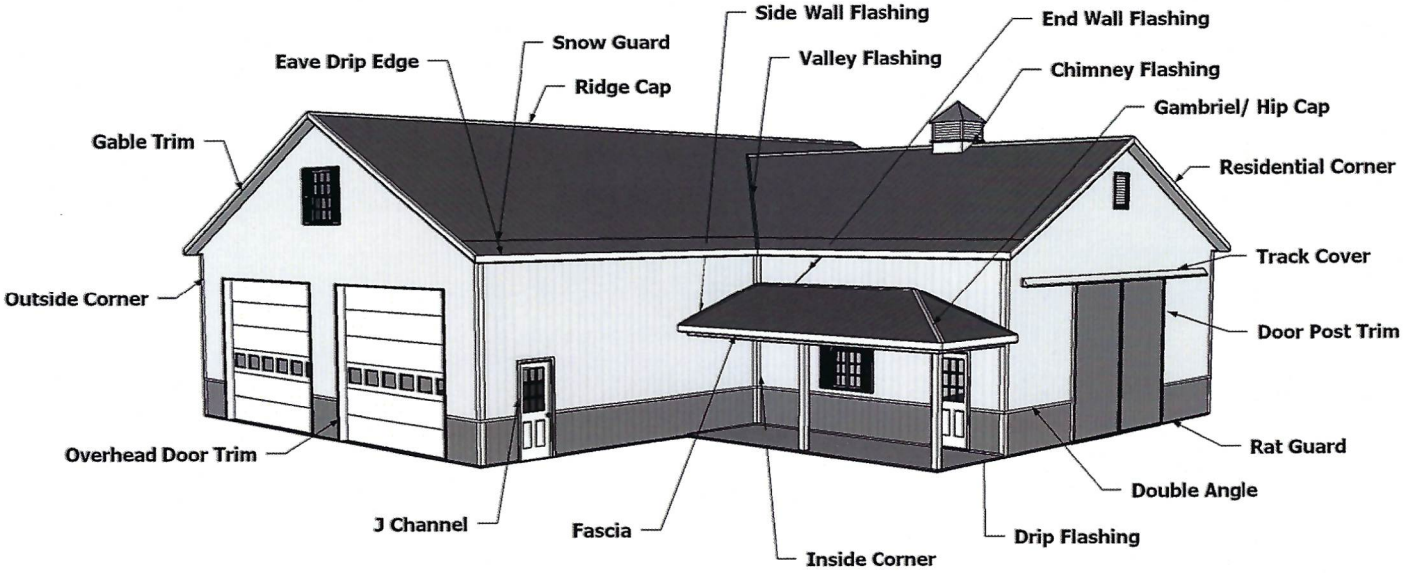

PARALLEL RIB TRIMS

OUTSIDE CORNER

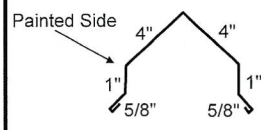

RESIDENTIAL CORNER

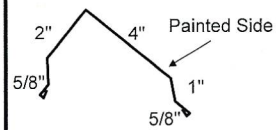

GABLE TRIM

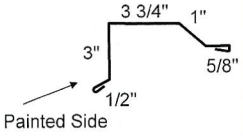

INSIDE CORNER

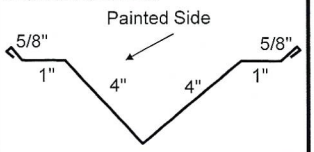

TRANSITION

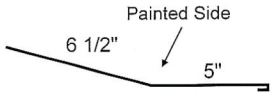

RIDGE CAP

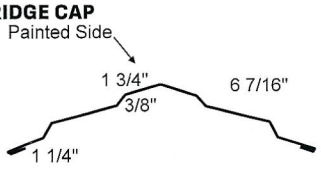

J-METAL

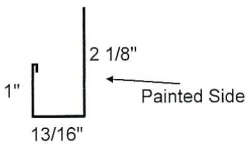

DOUBLE ANGLE

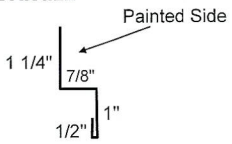

RAT GUARD

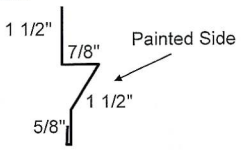

VALLEY FLASHING

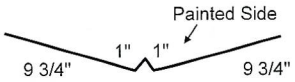

TRACK COVER

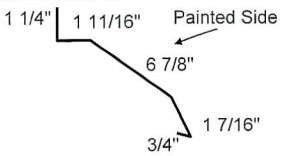

DOOR POST TRIM

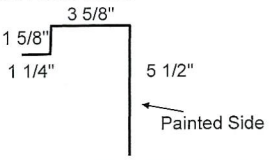

OVERHEAD DOOR TRIM

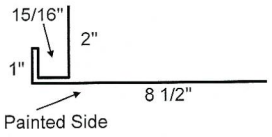

SIDE WALL FLASHING

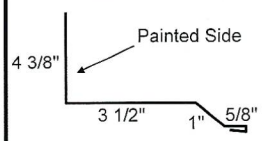

END WALL

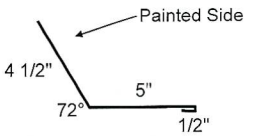

GAMBRIEL/HIP CAP

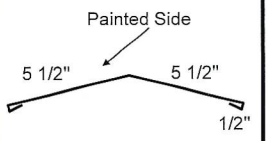

MINI ANGLE

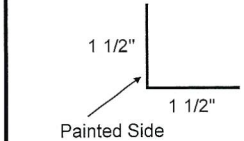

CHIMNEY FLASHING

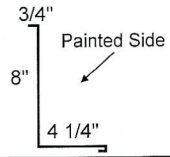

FASCIA TRIM

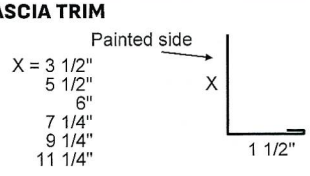

DRIP EDGE

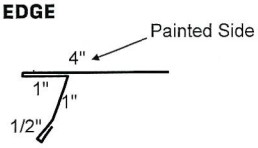

DRIP FLASHING

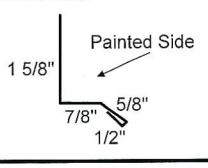

SNOW GUARD

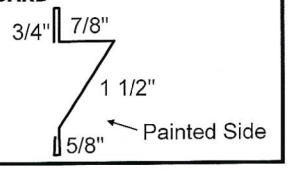

419-896-2200

www.metalexteriors.com

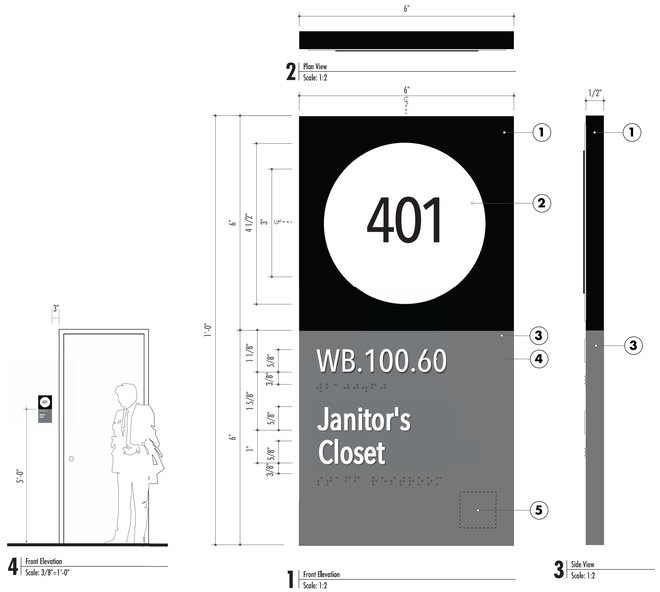

SIGN 1023 DETAIL

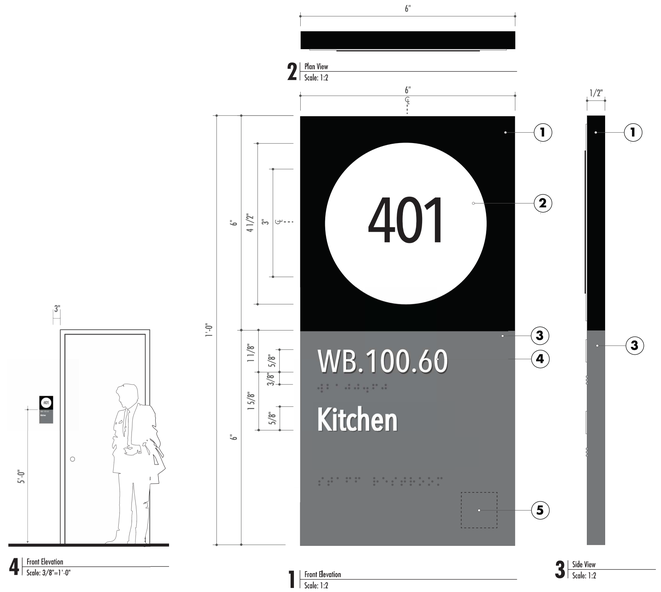

SIGN 1024 DETAIL NTS 2

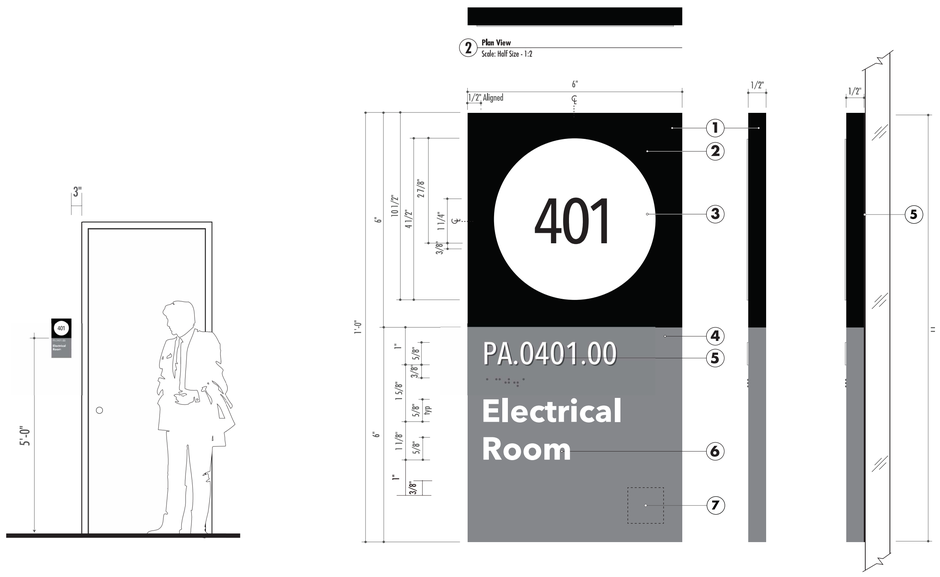

SIGN 1022 DETAIL NTS 4

SIGNAGE GENERAL NOTES

1. MESSAGE PANEL TO BE PHOTOPOLYMER APPLIED TO 1/2" THICK ACRYLIC. SEAM TO BE SEALED AND PAINTED. EDGES TO APPEAR SEAMLESS. SIGN TO HAVE RAISED COPY AND GRADE 2 BRAILLE, UPPER HEADER PAINTED TO MATCH P-2 BLACK WITH SATIN FINISH ON THE FACE AND EDGES. ALL EDGES WILL BE FINISHED SMOOTH PRIOR TO PRIMING AND PAINTING.
2. SYMBOL FIELD BACKGROUND TO BE PAINTED P-4 WHITE WITH A STAIN FINISH. SYMBOL TO BE RAISED 1/32" AND TIPPED SCREENED P-2 STANDARD BLACK.
3. LOWER FIELD PAINTED TO MATCH P-1 DARK GREY WITH A STAIN FINISH.
4. RAISED MESSAGE TO BE SCREENED TIPPED TO MATCH P-4 WHITE WITH A SATIN FINISH. GRADE 2 BRAILLE TO BE RAISED 1/32", TIPPED TO ACHIEVE A DOMED SURFACE AND PAINTED TO MATCH BACKGROUND. ALL ROOM NUMBERS AND ROOM NAMES TO BE CONFIRMED BY OWNER PRIOR TO FABRICATION. SIGNAGE SUBCONTRACTOR TO SUBMIT DETAILED SHOP DRAWINGS FOR APPROVAL. ROOM NUMBERS SHOWN ARE FOR GRAPHIC PURPOSES ONLY.
5. TYPESTYLE: AVENIR NEXT CONDENSED MEDIUM
6. PLACEMENT AREA FOR +/- PRESSURE STICKER
7. COMPLETE SIGN ASSEMBLY TO BE MOUNTED FLUSH TO WALL SURFACE WITH THIN MIL VHB TAPE AND SILICONE ADHESIVE. SIGN TO BE LOCATED AT 5'-0" TO CENTER A.F.F. AND 3" FROM THE STRIKE SIDE OF THE DOOR.
8. THE SIGNAGE CONTRACTOR IS TO FIELD VERIFY ALL EXISTING CONDITIONS PRIOR TO SUBMITTING DETAILED SHOP DRAWINGS AND COPY LAYOUTS.

VCS architects
19251 Purus Dr.
Porter, TX 77365

CONSULTANTS

BATES ALLEN PARK
BLACK COWBOY MUSEUM
630 CHARLIE ROBERTS LANE
EAST BERNARD, TX 77435

Drawing Date: 06/03/2024
Drawn By: SMA
Checked By: DDV
Scale: AS NOTED

Revisions:

DESCRIPTION	
ISSUE FOR BID & CONSTRUCTION	09/23/2024

Drawing Name

SIGNAGE & GRAPHICS
SIGN 1022, 1023 & 1024
SIGNAGE DETAILS

SG-203